SMW-AUTOBLOK worldwide leader in Steady Rests

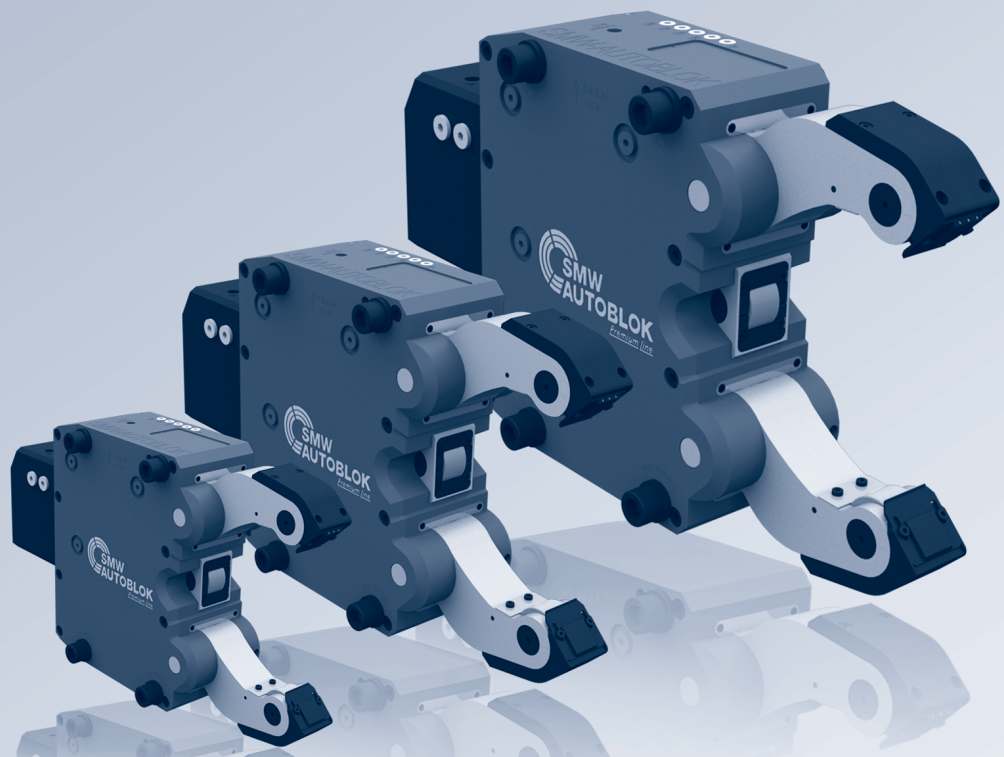

Fixed or travelling application

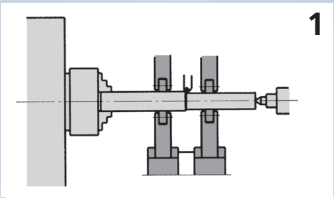

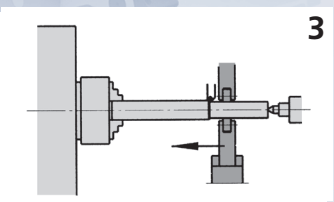

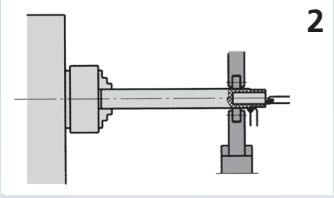

1. Tandem Steady Rest fixed
2. Steady Rest fixed for end machining
3. Steady Rest travelling

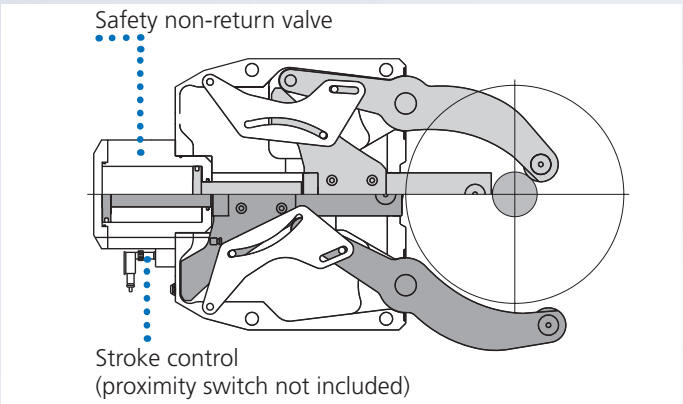

Features included in standard range

Steady Rest Type	Standard Line		Basic Line	Premium Line					
	SLU-X	SLUB, SLUB-A	SLU, SLU-A	SR	SRA	SR-CL	K, KA	KLU, KLU-A	RX
Steady Rest Size	1 - 5.1	3 - 6	1 - 6	2 - 6	2 - 6	4 - 6	3 - 7.1	215 - 540	2 - 6.1
Sealed body	■			■	■	■	■	■	■
Safety valve	■	■	■	■	■	■	■	■	■
Stroke control (proximity switch not included)	■	■	■	■	■	■	■	■	■
1 set swarf guard 3-piece	■	■	■						
1 set swarf guard with integrated coolant flush				■	■	■	■	■	■
1 set cylindrical rollers	■	■	■	■	■	■	■	■	■
Port for compressed air	■	■	■	■	■	■	■	■	■
Port for coolant through arms incl. chipguard				■	■	■	■	■	■
Toolbox	■	■		■	■	■	■	■	■

SLU-X® • SR® • K • KLU • RX

SLU-X / SLU / SR / K / KLU / RX
large clamping range

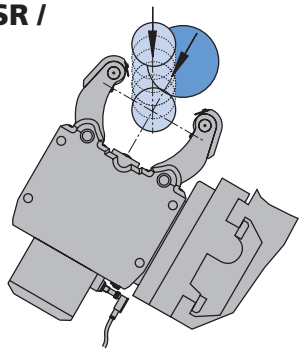

SLU-A / SRA / KLU-A / KA
additional pivoting upper arm
for automatic vertical loading

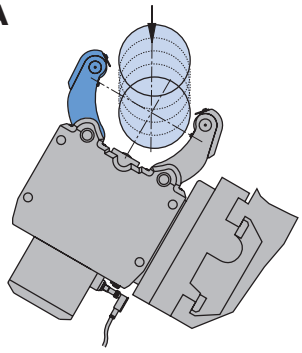

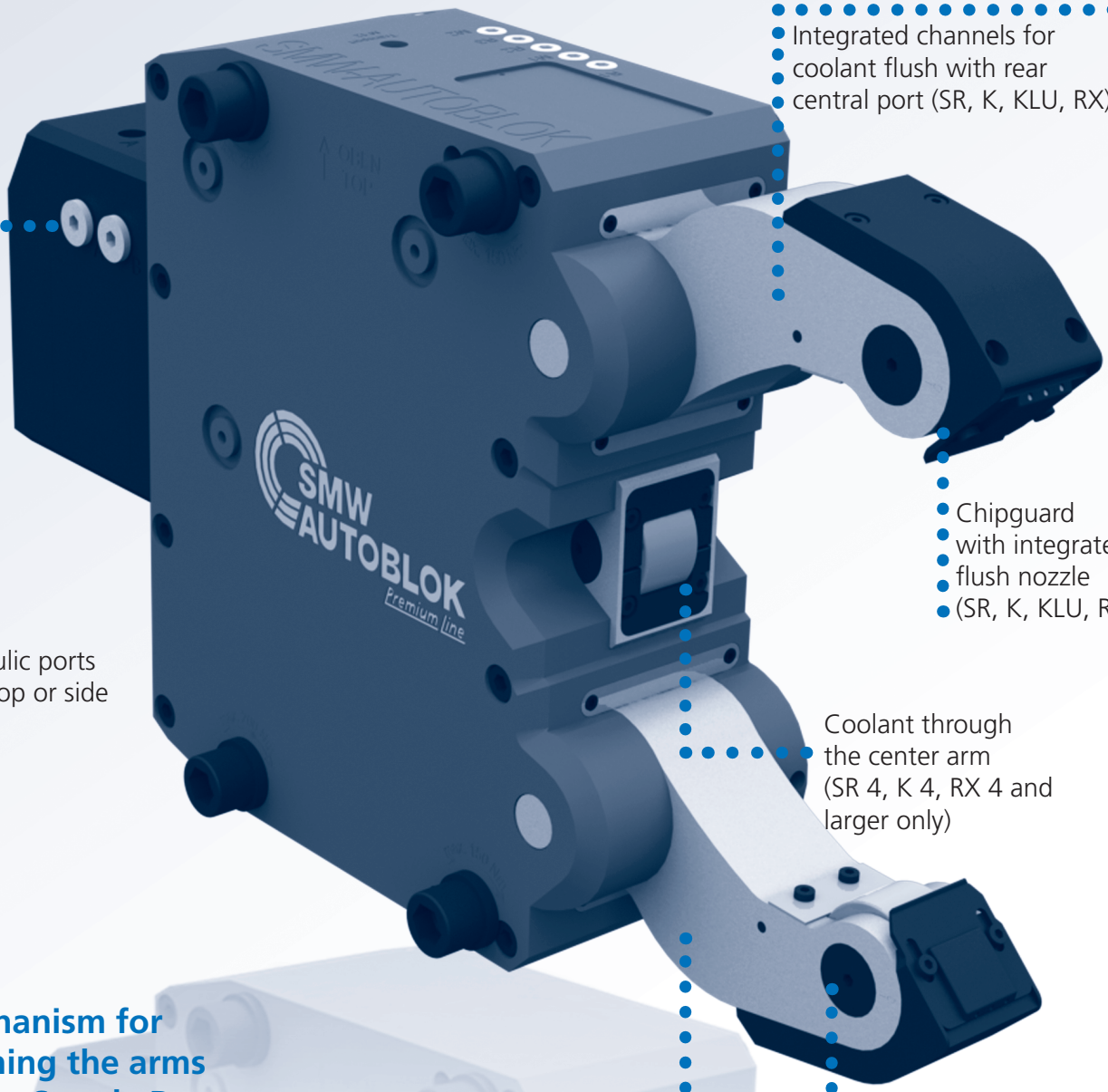

Integrated channels for coolant flush with rear central port (SR, K, KLU, RX)

Chipguard with integrated flush nozzle (SR, K, KLU, RX)

Hydraulic ports from top or side

Coolant through the center arm (SR 4, K 4, RX 4 and larger only)

Mechanism for opening the arms of the Steady Rest without springs and free from wear.

Arms and centerpiece hardened (SLU-X, SR, K, KLU, RX)

Easy change of rollers without loose parts

Option of manual lubrication (M) (all types)

- Low cost solution for medium working conditions and low build up of swarf.
- The lubrication points and rollers are supplied with lubrication grease via the grease nipples and the grease gun.
- Lubrication intervals depending on the working conditions normally every 4 to 8 operating hours.
- Grease: KPE 2R-20 DIN 51502.

Manual lubrication (M)

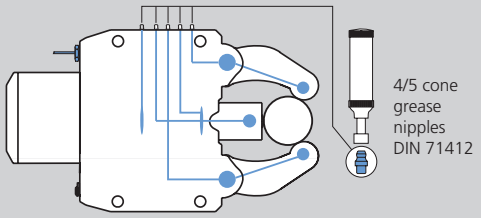

Option of central oil lubrication (Z) (all types)

- For heavy working conditions and high build up of swarf.
- For travelling Steady Rest applications.
- The use of our separate complete lubrication unit with timer control is recommended.
- Lubricating intervals 5 - 20 min.
- Min. / max. operating pressure 10 / 45 bar.
- Oil: Viscosity of 46 mm² / s (viscosity class ISO).

Central lubrication oil (Z)
Centralized lubrication G 1/8"

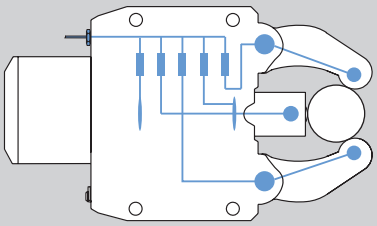

Lubrication unit oil
Id. No. 088707

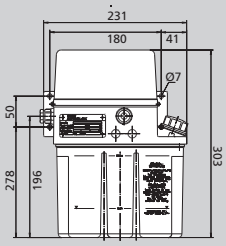

Option of central lubrication oil + air (OLD) (all types)

- For heaviest cutting conditions with high built up of swarf, dust or coolant.
- The SMW-AUTOBLOK oil + air unit for lubrication with built-in timer control is mandatory.
- This unit injects oil for lubrication into the air hose in adjustable intervals (1 - 4 min.).
- The permanent air flow (min. 3 bar) feeds the oil to the rollers and keeps them clean.
- Oil: Viscosity of 46 mm² / s (viscosity class ISO).

Oil + air lubrication (OLD)
Centralized lubrication G 1/8"

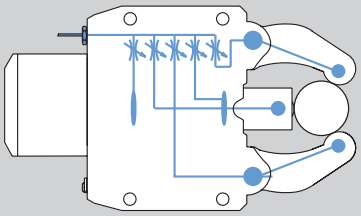

Lubrication unit oil + air
Id. No. 088708

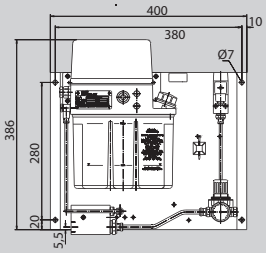

Option of central grease lubrication (F) (not SLU / SLU-A / SLUB / SLUB-A)

- For machines with central grease lubrication.
- For application and intervals please follow the instruction of the machine maker.
- Min. / max. operating pressure 30 / 45 bar.
- Grease: NLGI class 0 or 1.

Central grease lubrication (F)
Centralized lubrication G 1/8"

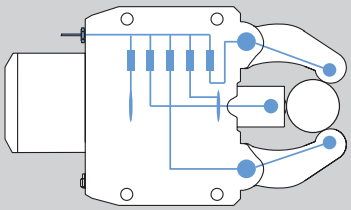

Option of rollers (all types)

- SMW-AUTOBLOK rollers (precision class P05) specially developed for our Steady Rests.
- Special sealing ensures highest precision and service life.
- Standard equipment: 1 set of cylindrical rollers.
- Option: Spherical rollers (for travelling Steady Rests), synthetic material rollers, carbide rollers.

Original SMW-AUTOBLOK roller

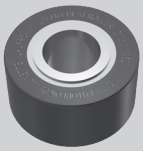

cylindrical

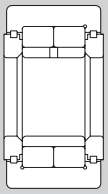

spherical

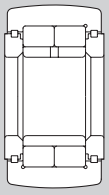

narrow

Rollers (all types)

- Rollers steel (standard): Surface of workpiece not hardened.

Available optional materials:

- Rollers synthetic material: Surface of workpiece polished or chrome plated.
- Rollers carbide: Surface of workpiece hardened.

Rollers steel

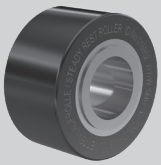

Rollers synthetic material

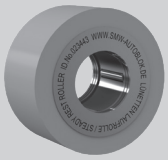

Rollers carbide

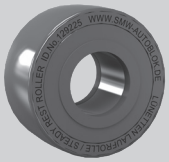

Eccentric fine adjustment

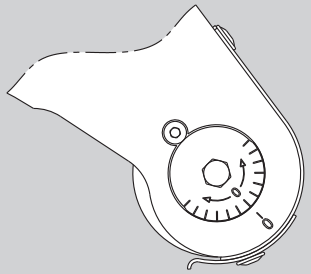

Option fine adjustment of center line
(all types)

- Eccentric roller pins on the two Steady Rest arms allow a quick fine adjustment of the center line.
- Therefore no need to unlock and adjust the entire Steady Rest on the bracket for small adjusting movements.
- Adjustment of open Steady Rest only!

Coolant / air feed

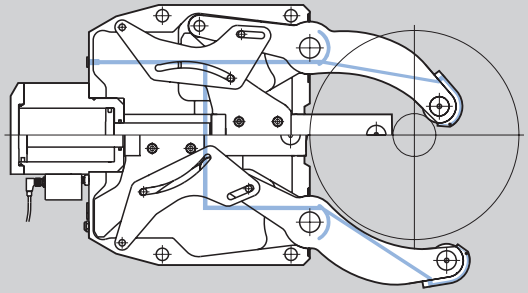

Coolant / air feed (SR / K / KLU / RX only)

- Built-in channels to feed coolant or air from a central connecting port to the Steady Rest arms.
- Basic equipment for SR / K / KLU / RX Steady Rests.
- From size SR-4 / K4 and larger with coolant through the center arm.

Chipguard coolant / air

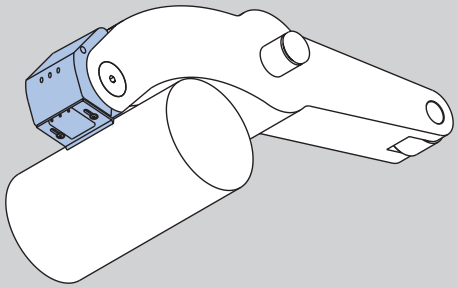

Patented coolant / air chipguard with integrated flush nozzles (SR / K / KLU / RX only)

- Keeps roller clamping area free from chips.
- The patented double flush nozzles keep front and rear of the wiper area clean.

Only for Steady Rests with coolant / air feed

Benefit:

- Constant centering accuracy.
- No damage of workpiece and rollers caused by chips / swarf.
- Less roller consumption = less costs.

SCU
diameter measuring system

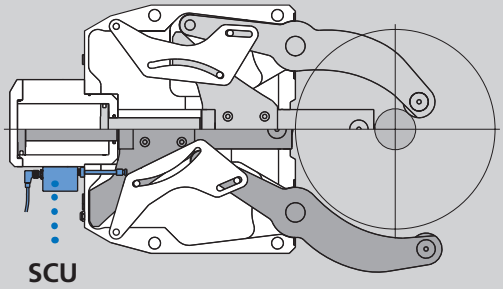

Option linear diameter measuring system SCU (not SLU, SLUB, SLU-A, SLUB-A)

- The position of the clamping arms is monitored by the linear measuring system SCU.
- Avoids collision with workpieces, turret, loader etc.
- Reduced cycle time due to position controlled opening of the arms to the requested opening only.
- Power supply SCU: In: 24 V Out: 4 - 20 mA

Steady Rest bracket with adjustment device

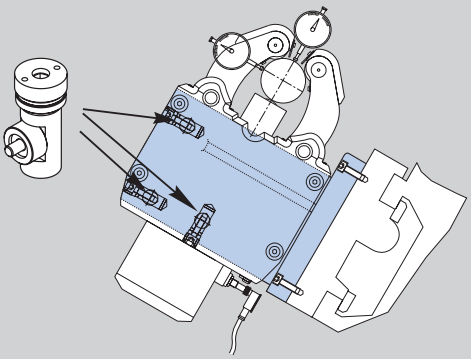

Steady Rest bracket

- A suitable bracket is very important for the function / precision of the Steady Rest.
- Fast and easy adjustment can be done with the SMW-AUTOBLOK **adjustment device** integrated into the bracket.
- SMW-AUTOBLOK supplies the correct bracket for all applications as a turnkey solution.

KLU / KLU-A

Self-centering Steady Rests
Premium line

Narrow arms for crankshafts

- Chip guard with coolant nozzles
- Stroke control unit or proximity switches
- proofline® = fully sealed - low maintenance

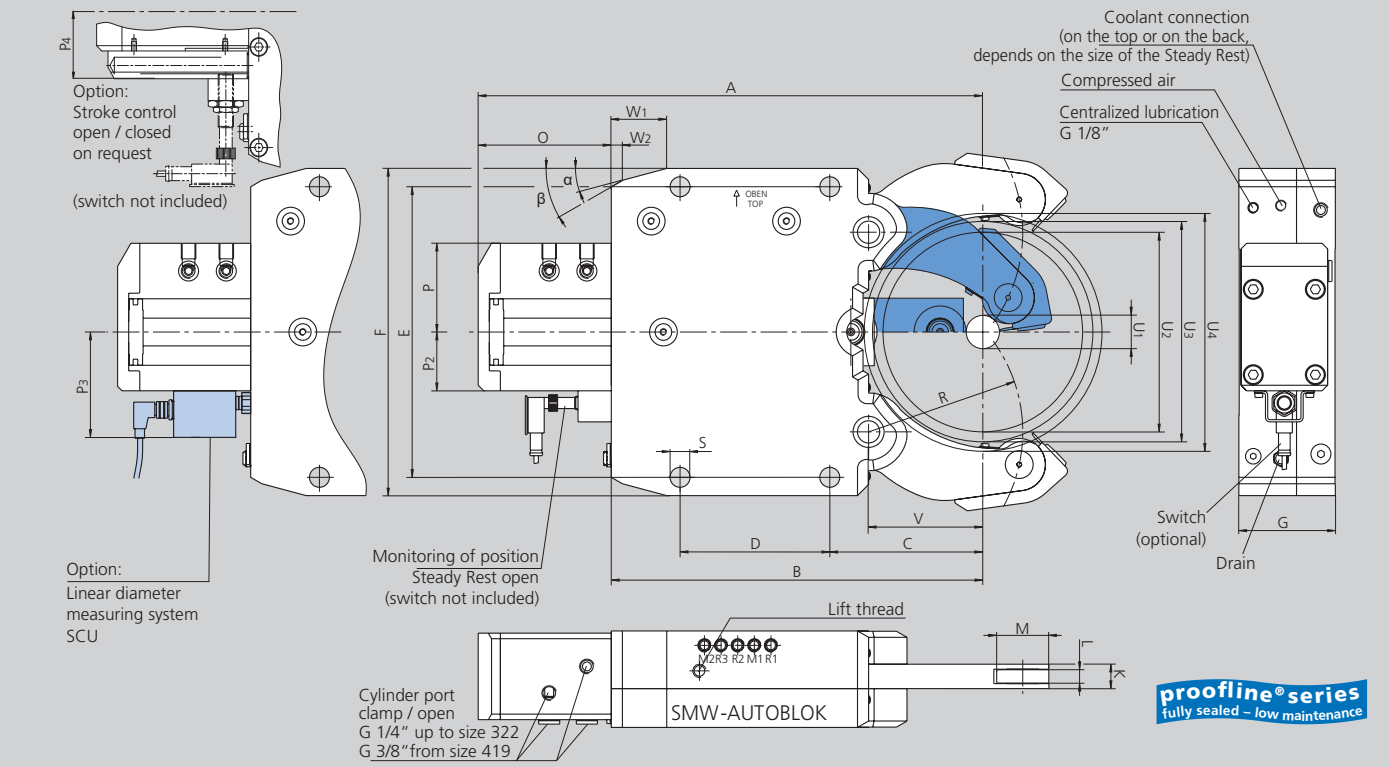

Subject to technical changes.
For more detailed information please ask our customer service.

Drain and compressed air
G 1/8" only size 322
G 1/4" from size 419

SMW-AUTOBLOK Type Size		KLU 215	KLU 218	KLU 222	KLU 318	KLU 322	KLU 419	KLU 422	KLU 429	KLU-A 530	KLU-A 540
Centering range with coolant chip guard	U_1	20 (12*)	20 (12*)	20 (12*)	30	30	30	30	30	70	70
	U_2	101 (92**)	101 (92**)	101 (92**)	180	180	245	245	245	293	293
Max. axial clearing diameter	U_3	106	106	106	189	189	253	253	253	330	330
Max. interference diameter	U_4	116	116	116	215	215	282	282	282	370	370
	A	275	275	275	455	455	602	602	602	703	703
	B	195	195	195	335	335	448	448	448	530	530
	C	70	70	70	138	138	146	146	146	198	198
	D	85	85	85	135	135	240	240	240	270	270
	E	170	170	170	262	262	365	365	365	400	400
	F	195	195	195	295	295	405	405	405	440	440
	G	59	62	66	83	87	89	92	99	105	115
	K	15	18	22	18	22	19	22	29	30	40
Width of rollers	L	8	10	13	10	13	10	13	16	16	20
Diameter of rollers	M	35	35	35	47	47	52	52	52	62	62
	O	80	80	80	120	120	154	154	154	173	173
	P_1	58	58	58	80	80	80	80	80	88	88
	P_2	40	40	40	53	53	53	53	53	59	59
	P_3	-	-	-	95	95	95	95	95	101	101
	P_4	61	61	61	74	74	74	74	74	80	80
	R	74	74	74	139	139	172	172	172	229	229
	S	14	14	14	18	18	23	23	23	23	23
	V	51	51	51	103	103	128	128	128	180	180
	W_1	30	30	30	50	50	58	58	58	62	62
	W_2	11.2	11.2	11.2	10	10	18.3	18.3	18.3	19	19
	α	15°	15°	15°	15°	15°	15°	15°	15°	18°	18°
	β	30°	30°	30°	30°	30°	40°	40°	40°	40°	40°
Piston area***	cm^2	12.5	12.5	12.5	28.3	28.3	28.3	28.3	28.3	50.2	50.2
Operation pressure min. / max.	bar	8 / 50	8 / 65	8 / 80	8 / 60	8 / 75	8 / 70	8 / 80	8 / 80	8 / 70	8 / 80
Max. clamping force / roller	daN	210	270	335	565	700	660	750	750	1170	1340
Centering accuracy within the whole range	mm	0.03	0.03	0.03	0.05	0.05	0.06	0.06	0.06	0.07	0.07
Repeatability accuracy	mm	0.007	0.007	0.007	0.007	0.007	0.01	0.01	0.01	0.01	0.01
Max. roller surface speed	m/min	750	750	750	715	715	700	700	700	700	700
Weight approx.	kg	14	15	16	33	36	70	74	85	100	125

* The Steady Rest can be modified to this clamping range (see instruction manual page 24) if the coolant chip guard is not used.
** Can be loaded axially. Radial loading with chip guard Ø 92, without chip guard Ø 101.
*** Cylinder sizes different from standard available on request.

KLU / KLU-A

Self-centering Steady Rests
Premium line

KLU Steady Rest with stroke control Steady Rest open via proximity switch (without proximity switch)***											
Steady Rest size		**215**	**218**	**222**	**318**	**322**	**419**	**422**	**429**	**530**	**540**
KLU-Z Central lubrication oil	Id. No.	128280	128282	128284	127528	127530	127534	127536	127538	127542	127544
KLU-OLD Central lubrication oil + air	Id. No.	128281	128283	128285	127529	127531	127535	127537	127539	127543	127545
KLU-F Central grease lubrication	Id. No.	on request	on request	on request	on request	on request	on request	on request	on request	on request	on request

KLU Steady Rest with stroke control via linear stroke control SCU, output 4 - 20 mA											
Steady Rest size		**215**	**218**	**222**	**318**	**322**	**419**	**422**	**429**	**530**	**540**
KLU-Z Central lubrication oil	Id. No.	-	-	-	125637	125655	125365	125398	125421	125988	126050
KLU-OLD Central lubrication oil + air	Id. No.	-	-	-	125638	125656	125366	125399	125422	125989	126051
KLU-F Central grease lubrication	Id. No.	-	-	-	on request	on request	226246	on request	on request	on request	on request

KLU Steady Rest with stroke control via linear stroke control SCU, output 0 - 10 V											
Steady Rest size		**215**	**218**	**222**	**318**	**322**	**419**	**422**	**429**	**530**	**540**
KLU-Z Central lubrication oil	Id. No.	-	-	-	125640	125657	125369	125400	125423	125992	126052
KLU-OLD Central lubrication oil + air	Id. No.	-	-	-	125641	125658	125370	125401	125424	125993	126053
KLU-F Central grease lubrication	Id. No.	-	-	-	on request	on request	on request	on request	on request	on request	on request

Type KLU

♦ denotes wearing parts, recommended stock items

Steady Rest size		**215**	**218**	**222**	**318**	**322**	**419**	**422**	**429**	**530**	**540**
Compact lubrication system for oil pressure lubrication Container 2.7 l, 220 V *,**		088707	088707	088707	088707	088707	088707	088707	088707	088707	088707
Compact lubrication system for oil + air lubrication Container 2.7 l, 220 V *,**		088708	088708	088708	088708	088708	088708	088708	088708	088708	088708
Inductive limit switch		087926	087926	087926	087926	087926	087926	087926	087926	087926	087926
Swarf guard coolant / air with wiper		128270	128273	128276	125633	125652	125360	125394	125417	127036	126046
Wiper for swarf guard coolant / air	♦	128272	128275	128278	126905	126906	126907	126906	126908	126909	126910
Swarf guard 3-pcs.	♦	125906	126055	126058	-	-	-	-	-	-	-
Roller stripper for middle piece	♦	197995	197996	197997	197998	197999	198000	198001	198002	198003	198004
Roller cylindrical design	♦	122794	020062	020759	017861	002411	017676	084766	019541	125964	019612
Adjustment device 1 set = 3 pcs.		-	-	-	200178	200178	200179	200179	200179	200179	200179

* When placing an order, please advise voltage.
** On request 110 V available.
*** Stroke control open / closed on request.