Hydraulic front end chuck Ø 500 - 800 mm

HYDL-S

- Oil feed through spindle wall
- 3 jaws

LONG STROKE
INCH SERRATION

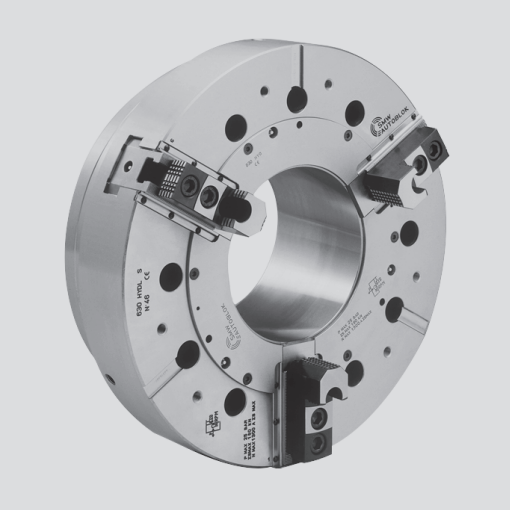

Application/customer benefits

- Machining of bars / shafts
- For special applications / special machines / rotary tables
- Complete spindle bore can be used

HYDL-S: Long stroke INCH SERRATION 3/32"x 90°

Technical features

- Power chuck with big through-hole, wedge hook design
- Built in cylinder with safty valves
- Chuck body case hardened
- Special mounting dimensions on request

Standard equipment

3-jaw chuck
1 set T-nuts with bolts
1 set of top jaws
Mounting bolts

Ordering example

3-jaw chuck HYDL-S 500 A11

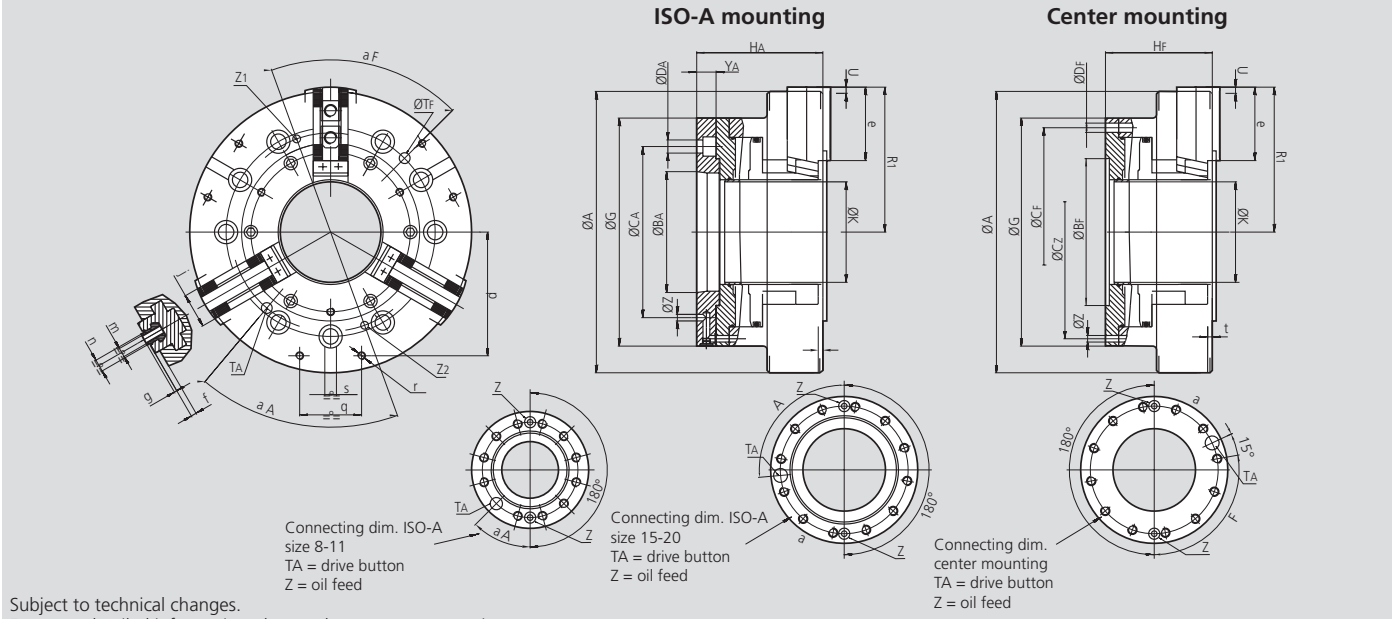

Subject to technical changes.
For more detailed information please ask our customer service.

Technical data

SMW-AUTOBLOK Type		HYDL-S 500	HYDL-S 630	HYDL-S 800
Radial jaw stroke	mm (inch)	11 (0.43")	13.5 (0.53")	13.5 (0.53")
Max. pressure	bar (psi)	30 (435)	25 (363)	25 (363)
Max. gripping force	kN (lbf)	150 (33721)	250 (56202)	250 (56202)
Max. speed	r.p.m.	1600	1300	1000
Moment of inertia	kg·m²	5.1	16	48
Weight (without top jaws)	kg (lbs)	160 (353)	310 (683)	580 (1279)
HYDL-S 3 jaws Id.-No.		**77835150**	**77835163**	**77835180**

Dimensions Type HYDL-S

Type	A mm	G mm	K mm	R1 open mm	U stroke mm	e mm	f mm	g mm	j mm	m mm	n mm	Z mm
HYDL-S 500	500	400	180	256	11.0 (0.43")	116	9	3.5	62	M20	25.5	10
HYDL-S 630	630	540	250	323	13.5 (0.53")	140	9	3.5	62	M20	25.5	10
HYDL-S 800	800	540	250	405	13.5 (0.53")	165	9	3.5	75	M20	25.5	12

Dimensions of chucks with center mounting

All types Size	B_F H6 mm	C_F mm	C_Z mm	D_F mm	H_F mm	Y_F mm	T_F mm	α_F deg.
Ø 500	300	350	330.2	17	185	6	20	65°
Ø 630	380	463.6	463.6	27	210	6	24	65°
Ø 800	380	463.6	463.6	27	220	6	24	65°

Dimensions of chucks with ISO-A mounting

All types Size	B_A J4 mm	C_A mm	D_A mm	H_A mm	α_A deg.	Z_A mm
Ø 500 A11	196.869	235	21	220	45°	10
Ø 500 A15	285.775	330.2	25	225	85°	12
Ø 630 A15	285.775	330.2	25	250	85°	12
Ø 630 A20	412.775	463.6	27	230	85°	12
Ø 800 A20	412.775	463.6	27	240	85°	12