JBX

Manual jaw box
SMW-AUTOBLOK standard mounting dimensions

JBX-2G

Manual jaw box
with semi-finished body

High precision, resistance and power manual jaw box

- Accessory for face plates, 4 jaws independent manual or other chucks
- Internal or external clamping

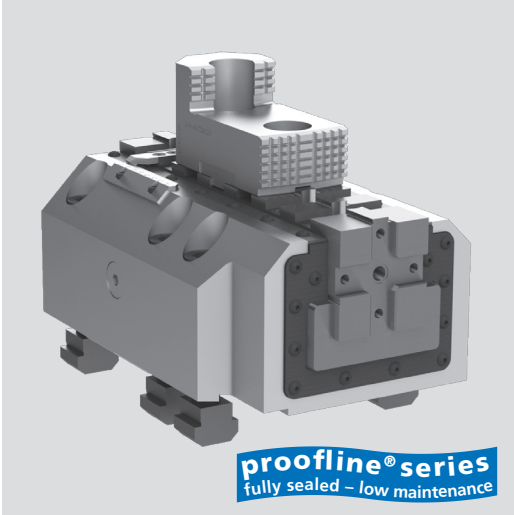

Application/customer benefits

- JBX: Standard mounting dimensions for SMW-AUTOBLOK chucks
- JBX-2G: Semifinished body and radial reference key to be adapted by customer
- Manual radial setting and clamping of large components on large plates or chuck
- Added to chucks there is more gripping force to apply a higher torque on the workpiece
- Added to chucks there are more contact points with the workpiece to better distribute the gripping force thus reducing distortion
- Very powerful and accurate clamping allowed by strong design
- Suitable for vertical machines thanks to the fully protected body
- Use of standard hard or soft jaw on top of the master jaw or special frontal jaws on the front side of the master jaw
- TONGUE & GROOVE master jaws (type "American Standard")

Technical features

- Manual gripping force applied by a strong and protected screw on a strong and rigid master jaw
- Manual and fine setting of master jaws for workpiece centering
- Protection from contamination with seals along the master jaw profiles
- Designed to work on SMW-AUTOBLOK large manual or power chucks or on special plates
- Body designed for better chip evacuation

Standard equipment

Manual jaws box
1 radial key
6 T-nuts and mounting screws (only JBX)

Ordering example

Qty. 1 / 2 / 3 / 4 manual jaw box JBX 300
Id. No. 77653003
Option: Actuation key Id. No. 11122700

Maximum protection

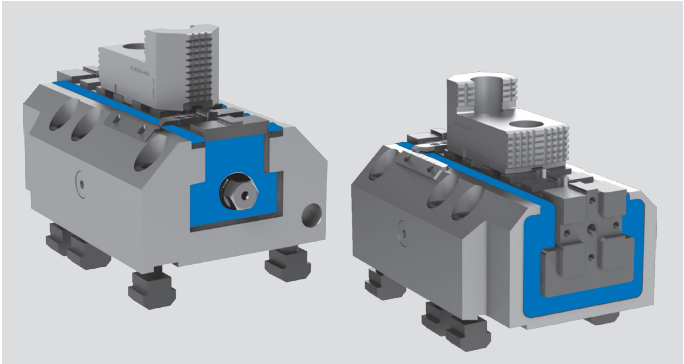

Master jaw protected on each side by steel profiles. Maximum protection from the penetration of chips, swarf, rubber and coolant allows less maintenance, working in bad environments and for a longer operative life.

Flexibility of use

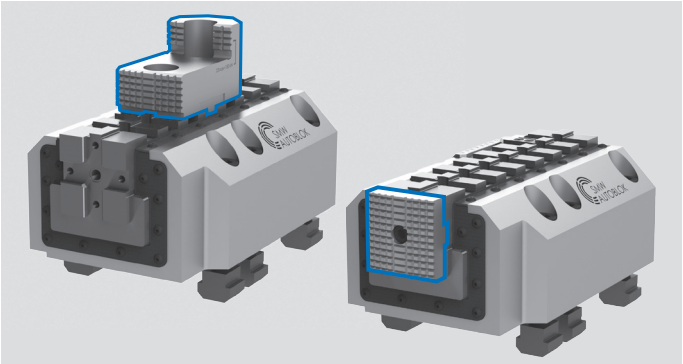

The jaw box can carry both standard or special, hard or soft jaws mounted on the upper side of the master jaw or special jaws mounted on the front side of the master jaw. The jaws on the front side allow optimal clamping in the same axis of the master jaws thus reducing deformation of the jaw and the jaw box. This allows a more rigid and accurate clamping. Also the frontal jaw option increases the flexibility allowing the customer to clamp the component in a very low area where it would be impossible to clamp with traditional jaws mounted on the upper side of the master jaw.

Technical data

SMW-AUTOBLOK Type Id. No.		JBX-2G 200 77652007	JBX 300 77653003	JBX-2G 300 77653009	JBX-2G 400 77654003
Jaw stroke (manual setting)	mm	50	50	50	100
Max. manual operating torque	Nm	160	200	200	400
Max. gripping force	kN	40	50	50	100
Weight (without top jaws)	kg	30	50	50	90
Hard top jaw (piece)*	Id. No.	12087111 13085300	12087111 13085300	12087111 13085300	12087111 13085300
Soft top jaw (piece)*	Id. No.	13045300	12044050	12044050	12044050
Soft top jaw long (piece)*	Id. No.	-	12045051	12045051	12045051
Soft top jaw for master jaw front side (piece)*	Id. No.	65653007	65653007	65653007	65653007

* The soft and tempered jaws are not in scope of delivery, the Id. No. are indicated in the table.

High precision, resistance and power manual jaw box

- Accessory for face plates, 4 jaws independent manual or other chucks
- Internal or external clamping

JBX-2G

Manual jaw box with semi-finished body

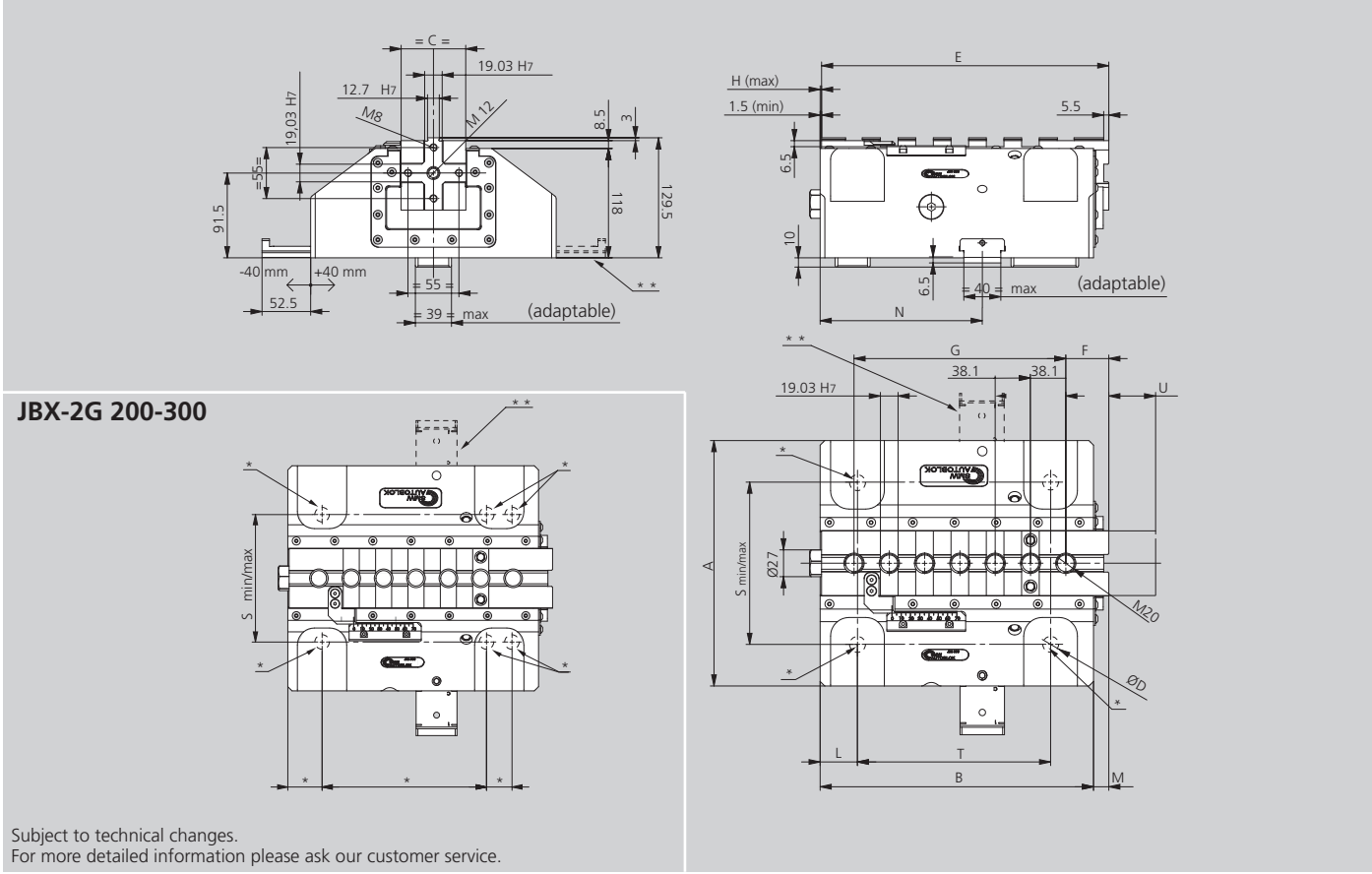

Subject to technical changes.
For more detailed information please ask our customer service.

SMW-AUTOBLOK Type		JBX-2G 200	JBX-2G 300	JBX-2G 400
A	mm	190	265	310
B	mm	225	295	380
C	mm	60	70	80
ØD min. / max.	mm	17-21	17-25	21-31
E	mm	235	310	395
F	mm	47,6	46.4	55.2
G	mm	152,4	228.6	304.8
H	mm	113	129,5	129.5
H1	mm	101,5	118	118
H2	mm	80	91,5	91,5
L	mm	32,5	40	57.5
J	mm	45	55	55
J1	mm	45	55	55
K	mm	19	27	27
M	mm	10	16.5	16.5
N	mm	87,5	175	225
P min. / max.	mm	0 / 50	1,5 / 51.5	1,5 / 101.5
R	mm	30	39	45
R1	mm	45	40	45
S Screws M16-M20 min. *	mm	120-125	150	-
S Screws M16-M20 max. *	mm	164-157	230	-
S M20-M24 nuts min. *	mm	-	165-175	210
S M20-M24 nuts max. *	mm	-	220	260
S M30 nuts min. *	mm	-	-	220
S M30 nuts max. *	mm	-	-	260
T	mm	208.5	208.5	250
U stroke	mm	50	50	100
V	mm	8	10	10
V1	mm	7	5,5	5,5

* All these elements have to be worked according to the needs of the customer. Before making the modifications, we suggest to request the jaw box 2D or 3D drawing. Note that the minimum screws size must be M16.

** In case of interference, the radial reference key can be mounted on the other side.

JBX

Manual jaw box
SMW-AUTOBLOK standard mounting dimensions

JBX-2G

Manual jaw box
with semi-finished body

High precision, resistance and power manual jaw box

- Accessory for face plates, 4-jaw independent manual or other chucks
- Internal or external clamping

JBX 300

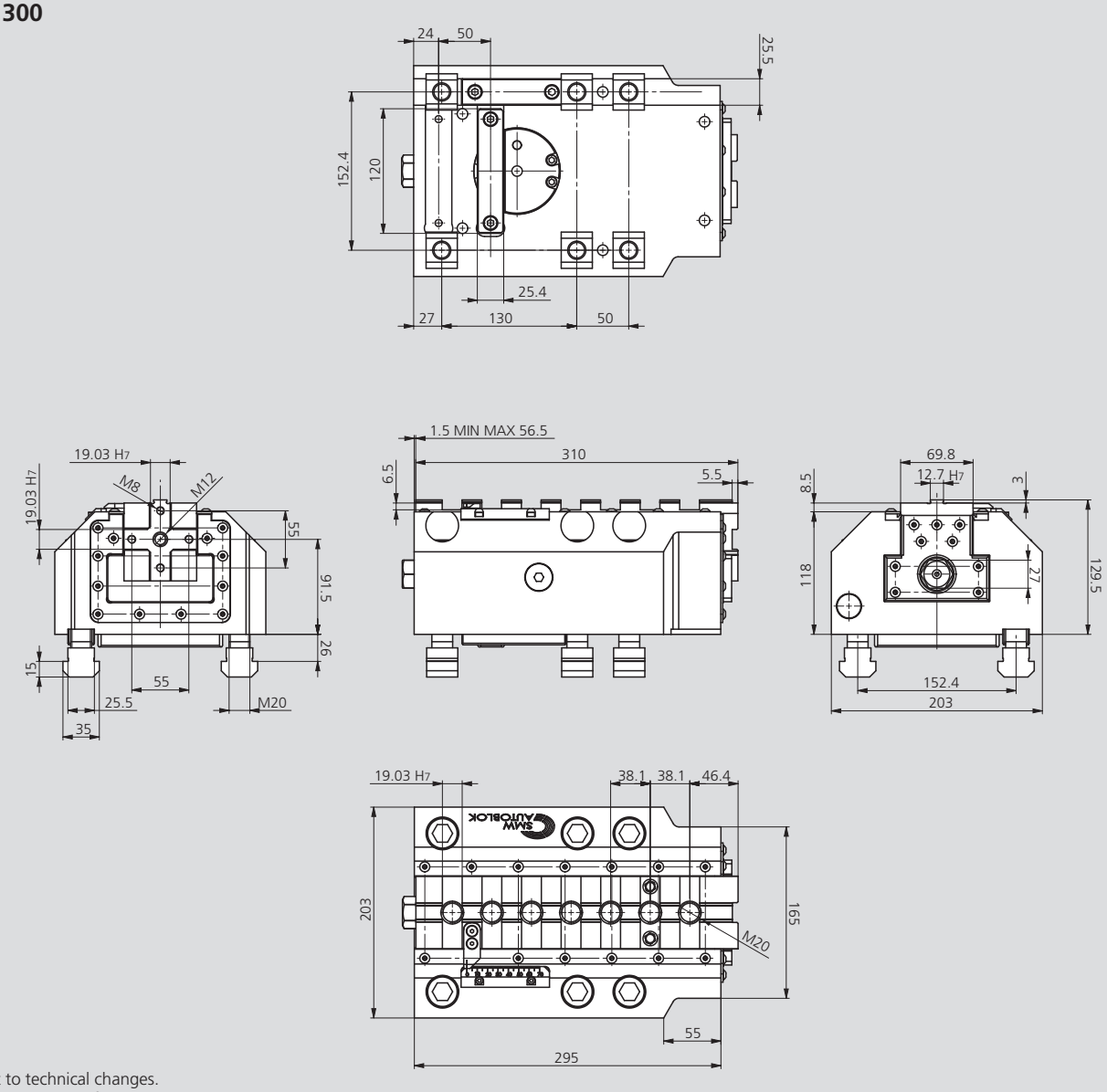

Subject to technical changes.
For more detailed information please ask our customer service.

Optional 5:1 torque multiplier for JBX and JBX-2G

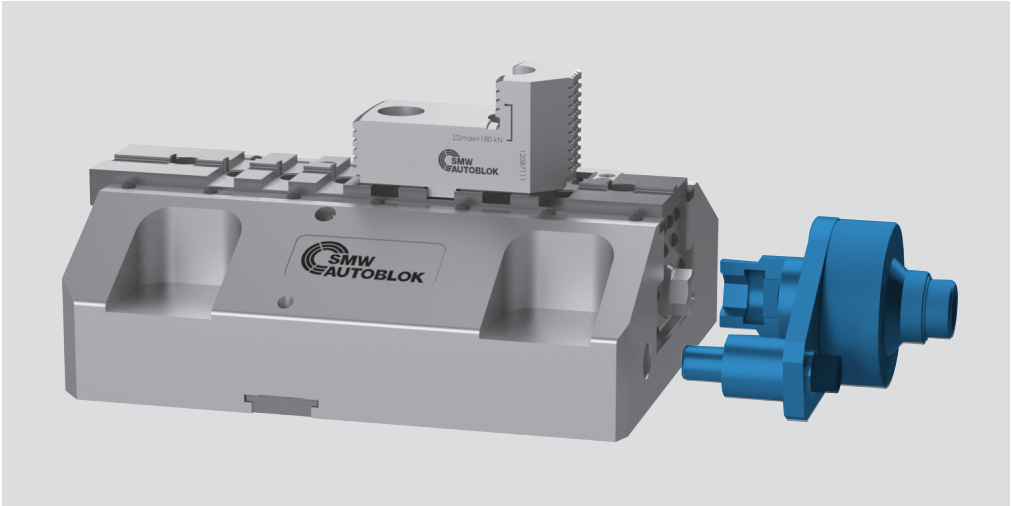

Torque multiplier
Id. No. 13506320

- Transmission 5:1
- Easy operation
- For fast achievement of maximum gripping force