SMW-AUTOBLOK worldwide

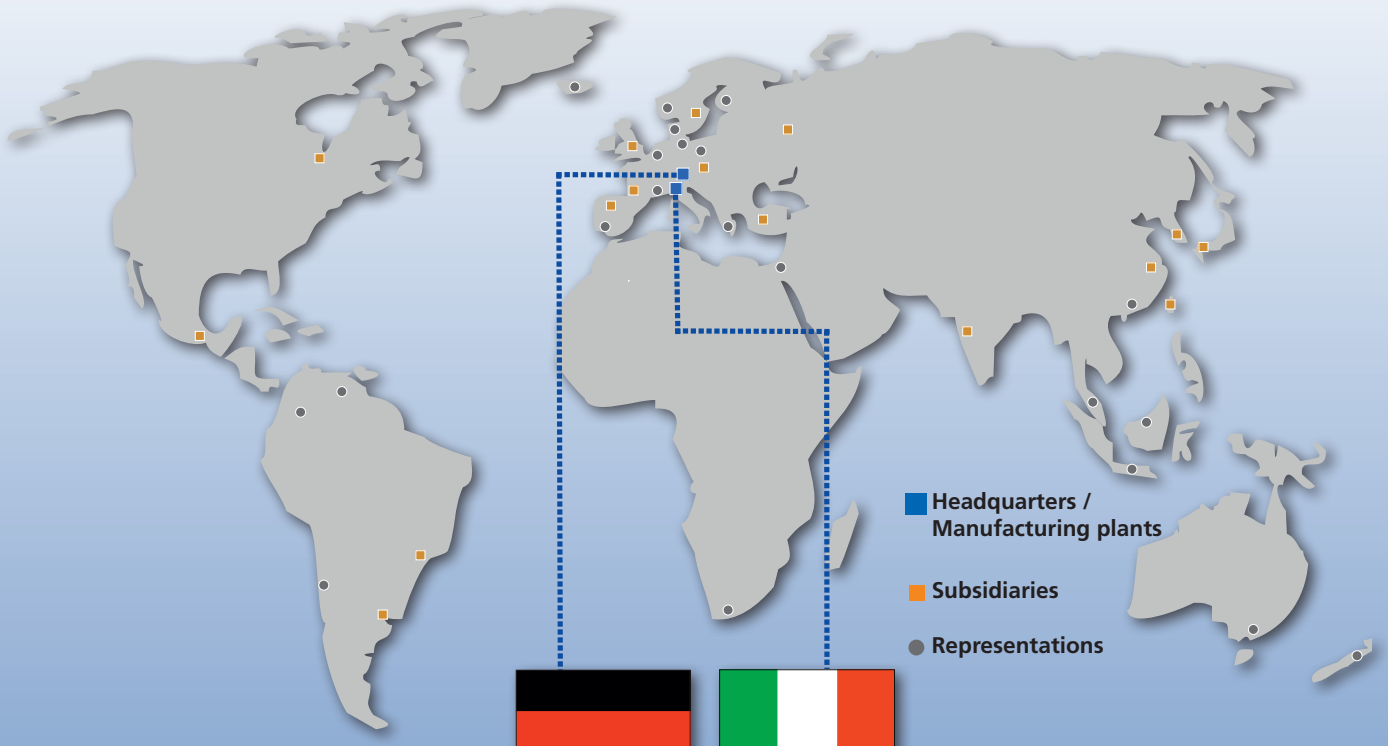

SMW-AUTOBLOK manufacturing plant Meckenbeuren
development | production | distribution | service | support

AUTOBLOK manufacturing plant Caprie-Torino

Visit our website: www.stationary-workholding.com

Latest product catalog | Product innovations | Contact data | 3D Customer data

Significant reduction of set-up times

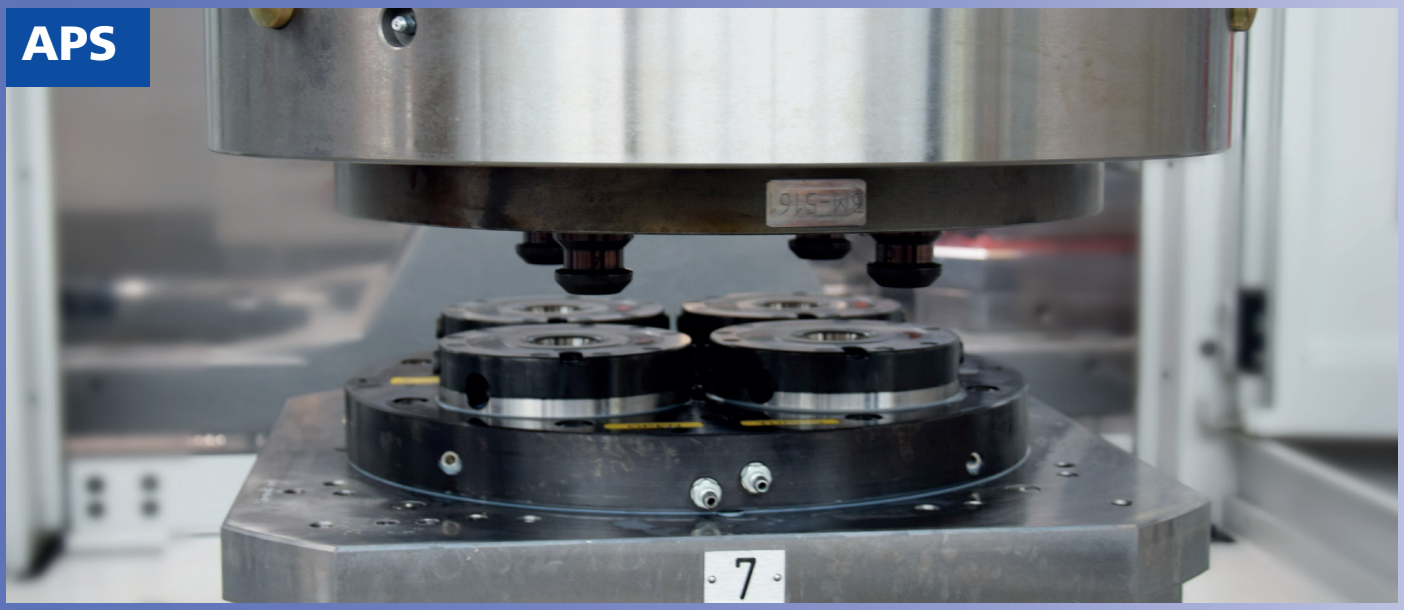

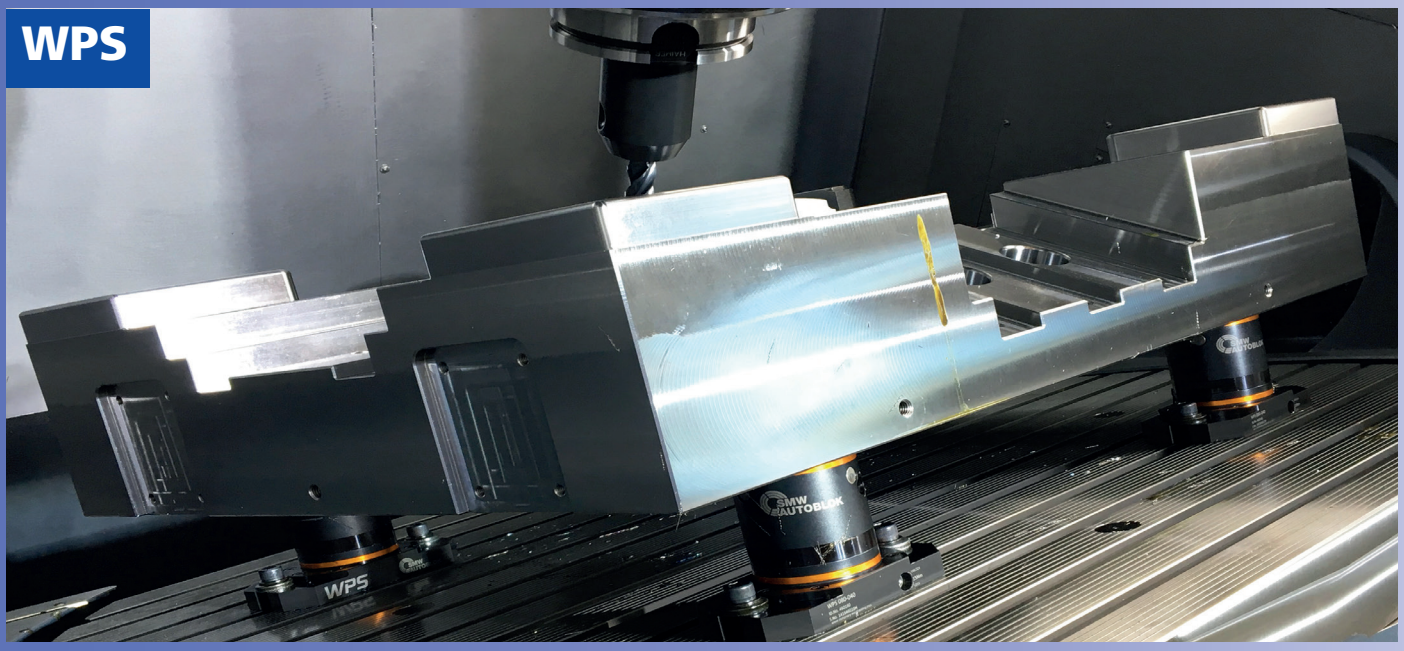

Zero point clamping systems (Page 1 of 2)

APS

Zero point clamping system modules

- Highest precision
- Wear-resistant and rust protected
- Maximum pull-in forces due to turbo function
- Suitable for automation
- Low installation height due to compact design
- Modules fully sealed (proofline)

APS

Clamping pins

- Large entry radii on the clamping pins for easy and safe loading
- Wear-resistant

APS

Clamping units

- Fully assembled clamping unit
- Ready to use
- Customer-specific versions available in a short time

APS

Module height extensions

- Ready to use single module units
- Different heights

APS

Special clamping units

- Customer-specific versions
- For vertical lathes
- For automation

APS

Special module height extensions

- For automation

APS

Combi units

- Ready to use combi module units
- Different heights

APS

Clamping pallets

- Fully assembled clamping pallet
- Optional with interface for module height extension
- Customized clamping pallets for any machine / application

APS

Spacers

- Adapt one or more combi unit

APS

Accessories

- Protection covers
- Pins and keys for orientation (single use)
- Fixing screws for clamping units

Significant reduction of set-up times

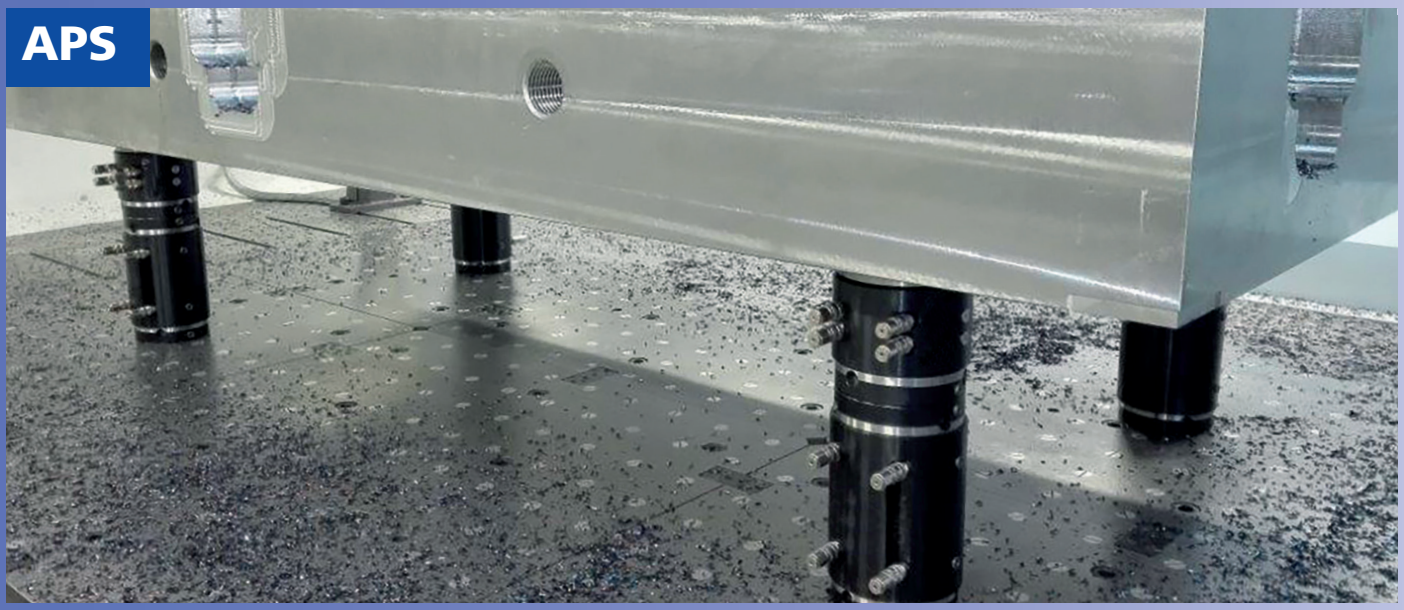

Zero point clamping systems (Page 2 of 2)

Page 74

WPS

Workpiece positioning system

- Ideal for workpiece direct clamping
- Highest precision
- Single quick-actuation
- Opening and closing with only 3.5 rotations
- Maximal holding forces
- Modules fully sealed (proofline)

Page 81

WPS

Accessories

- Clamping pins
- Drawing for mounting clamping pins
- Reductions
- Mounting bolts
- Positioning set

Page 87

WPS

Grid plates

- Standard and customized grid plates
- Rust protected
- Short delivery times

Page 89

WPS

Adapter for APS

- Adapter to use WPS on APS

Page 90

WPS-PPD

Workpiece preparation device

- Ideal for OP 10
- Preparation of the workpiece for WPS
- Clamping height of the workpiece adjustable
- Very strong and compact design

Page 100

WPS Mini

Mini workpiece positioning system

- Mini version - 40 mm diameter
- Manual quick actuation (270° rotation)
- Highest repeatability
- Maximum pull-in and holding forces
- Modules fully sealed (proofline)

Page 106

WPS ZeroAct

Connectable flexible zero point module

- Up to 3 modules connectable in a row with central actuation
- Very flat design
- Manual quick actuation (270° rotation)
- Highest repeatability
- Maximum pull-in and holding forces
- Modules fully sealed (proofline)

Page 112

WPS-Z-Flex

Workpiece positioning system

- Ideal for workpiece direct clamping
- Highest precision
- Single quick-actuation
- Opening and closing with only 3.5 rotations
- Maximal holding forces
- Modules fully sealed (proofline)
- Continuously adjustable

APS Zero Point Clamping System

Industry 4.0 Product

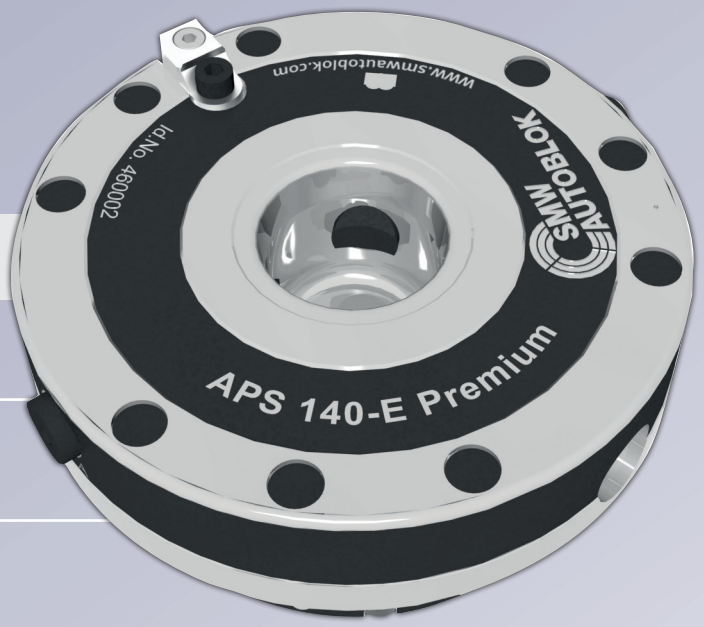

1 Customer benefits

- Fully sealed (proofline)
- Highest stiffness by means of 3 clamping slides
- Low installation height due to the compact design
- Highest process reliability and repeat accuracy < 0.005 mm
- Modular construction kit system: existing clamping systems can be modified very easy
- Significantly reduced costs due to reduced set-up times

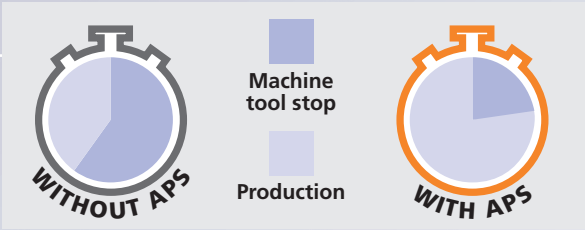

2 Machine set-up costs

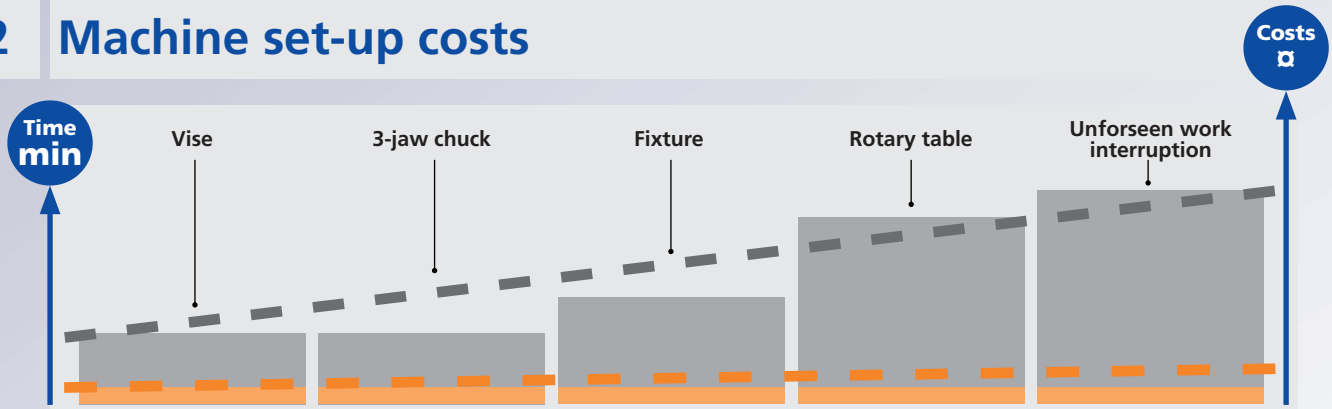

- Machine set-up costs without APS

  Time = Costs

- Machine set-up costs with APS

  Time = Costs

WATCH THE VIDEO

3 Overview APS versions

BASIC
- 2 Clamping slides
- Turbo function
- Sealed

PREMIUM LIGHT
- 3 Clamping slides
- Turbo function
- Air cleaning (except INOX version)
- Sealed
- Stainless steel (only INOX version)
- High temperature (INOX-HEAT)

PREMIUM LIGHT SC
- 3 Clamping slides
- Turbo function
- Air cleaning
- Stroke control system
- Air sensing
- Sealed

PREMIUM
- 2-3-6 Clamping slides (based on sizes)
- Turbo function
- Air sensing
- Air cleaning (100-140 sizes)
- Sealed
- 2 or 4 feedings
- Key
- Stroke control system (except 100 size)

Type	APS classification	Size	Clamping slides	Turbo	Air cleaning	Stroke control	Air sensing	Key	Feedings	+10°C + 70°C	+10°C + 130°C
BASIC	BASIC	100	2	●						●	
		140	2	●						●	
PREMIUM LIGHT	PREMIUM LIGHT	140	3	●	●					●	
	PREMIUM-LIGHT INOX	140	3	●						●	
	PREMIUM-LIGHT INOX-HEAT	140	3	●							●
PREMIUM LIGHT SC	PREMIUM LIGHT SC	140	3	●	●	●	●			●	
	PREMIUM LIGHT SC	160	3	●	●	●	●			●	
PREMIUM	PREMIUM	100	2	●	●		●	●		●	
	PREMIUM SC	140	3	●	●	●	●	●		●	
		190	3	●		●	●	●		●	
		250	6	●		●	●	●		●	
	PREMIUM SC-2INN	190	3	●		●	●	●	●	●	
	PREMIUM SC-4INN	190	3	●		●	●	●	●	●	

APS Features

SIZES 100-140-160-190-250

Industry 4.0 Product

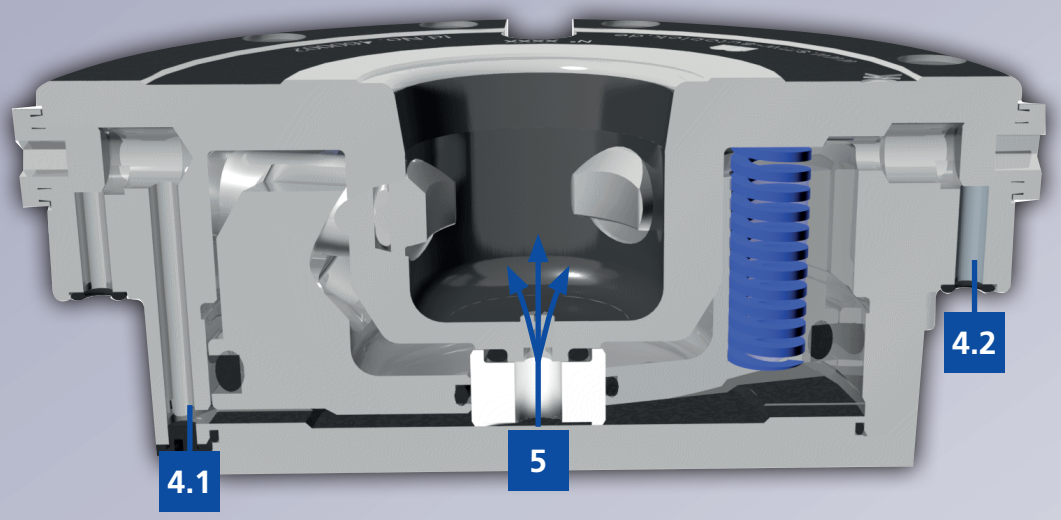

1 Maximum rigidity

Jaws with double inclined plane which generates the "PULL DOWN" effect and piston with integral inclined planes.

2 Maximum accuracy

Maximum accuracy of the tapered coupling between the pin and the module.

3 Air sensing

It is possible to monitor the clamping device's supporting surface through the air sensing.

4 Turbo function

- **4.1 Unlocking function**
  at 6 bar
- **4.2 Turbo function**
  The TURBO function is always integrated in APS PREMIUM modules TURBO is the function by means of which the compressed air increases the clamping force applied by the springs until reaching the "PULL DOWN" clamping force.

5 Air cleaning

The built-in air cleaning function ensures that the clamping system's supporting surface remains clean and free of chips while the modules are being opened.

GENERAL APS FEATURES

6 Clamping system with 3 jaws at 120°

APS is the only one zero point clamping system with 3 jaws at 120° and thanks to special treatments of the pins and the clamping jaws further improves its durability.

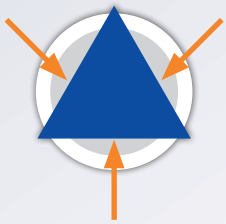

- Centering the stud in the body perfectly
- Vibration dampening with tooling working from any direction
- More accuracy and better vibration dampening

7 Stroke control system

The patented SC system is ideal for automated applications with robot loading and unloading of the pallets. The APS locking and unlocking is monitored by air pressure.

7.1 Locking position

The air enters from the lower side inlet the hole and exits out from the hole **w** = pressure drop in the line and the machine receives a "APS locked" confirmation.

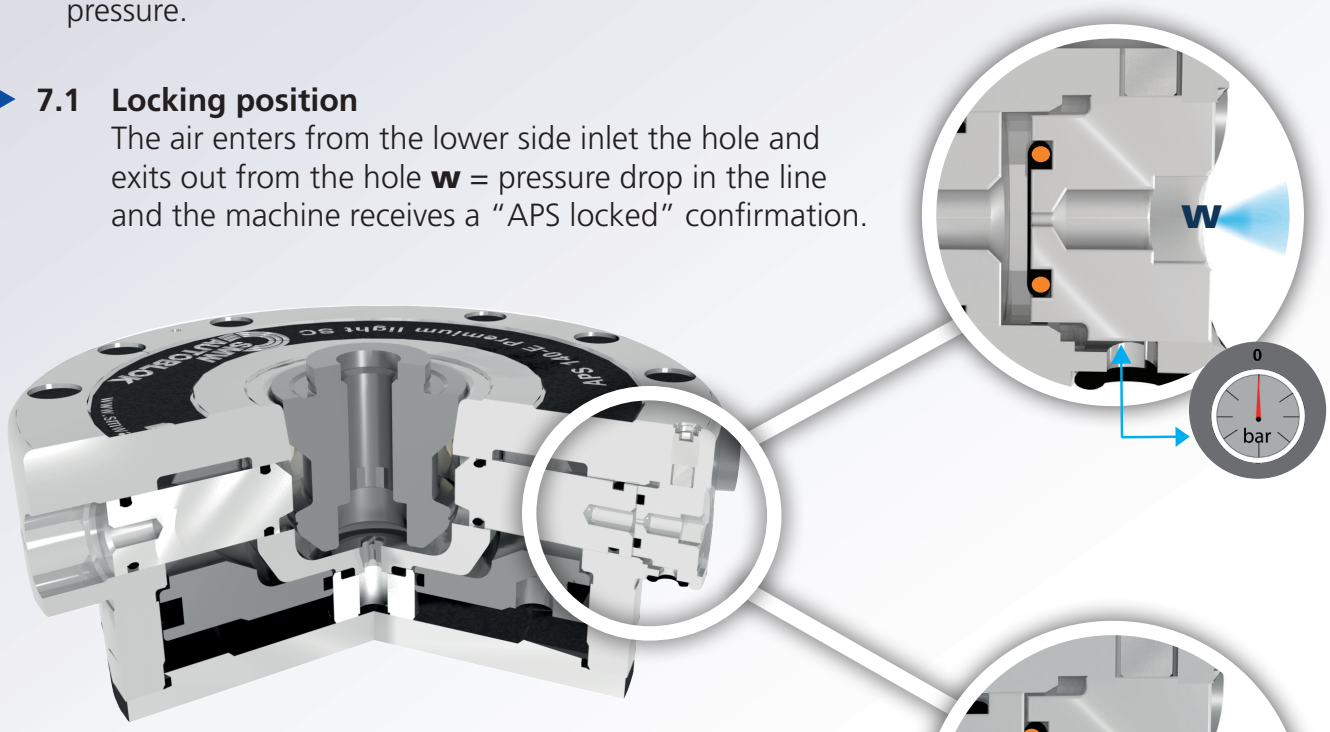

7.2 Unlocking position

The air enters from the lower side inlet and it can't escape from the hole **w** = no pressure drop in the line and the machine receives a "APS unlocked" confirmation.

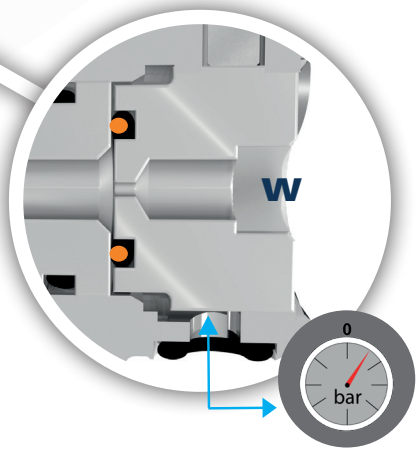

ATTENTION: the pneumatic system of the pressure switch must signal the alarm condition and must prevent the pallet exchange on the APS or any robot operation when the inlet pressure is less than 6 bar.

APS 100-E

BASIC
Zero point clamping module

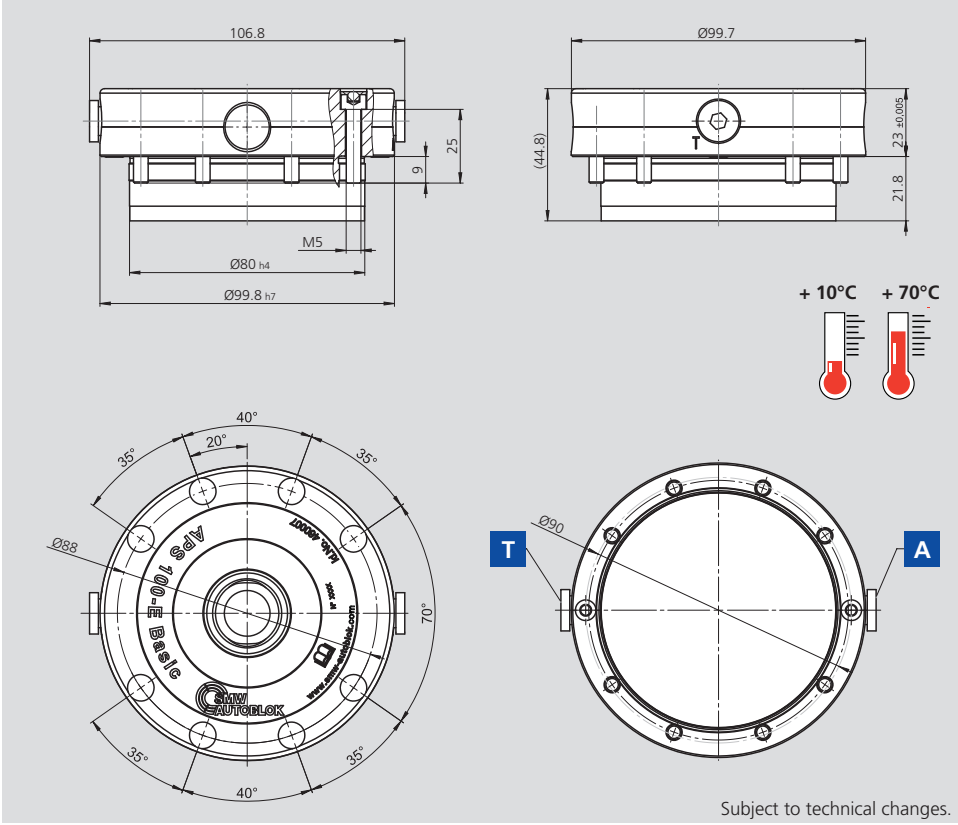

Technical features
- 2 clamping slides
- Turbo function **T**
  to increase the clamping force

A = Open

Subject to technical changes.

Type	Id. No.	Pull-down force	Holding force*	Unlocking pressure	Repeatability	Weight
APS 100-E BASIC	460007	4 / 15**KN	13(M6)*** 25(M8) kN	6 bar	< 0,005 mm	1.9 kg

* With screws DIN EN ISO 4762 - 12.9 / ** With "Turbo effect" / *** Screws EN-ISO10642

APS 100-E

PREMIUM
Zero point clamping module

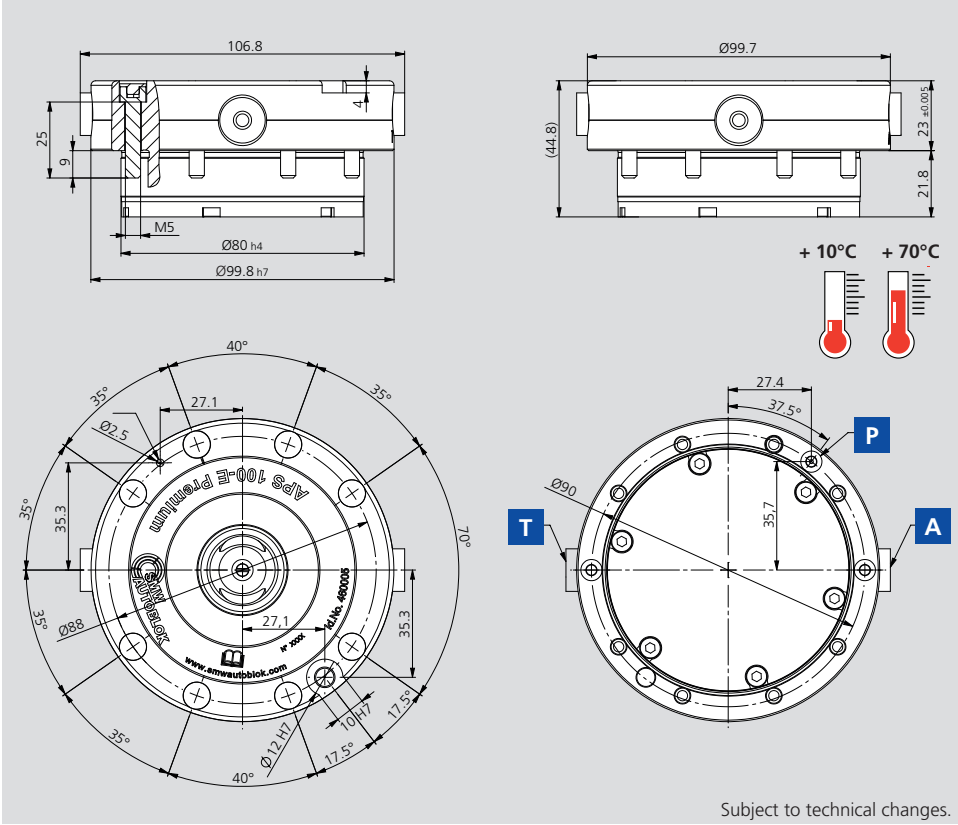

Technical features
- 2 clamping slides
- Turbo function **T**
  to increase the clamping force
- Anti-rotation key seat
- Air sensing **P**
- Air cleaning

A = Open

Subject to technical changes.

Type	Id. No.	Pull-down force	Holding force*	Unlocking pressure	Repeatability	Weight
APS 100-E PREMIUM	460005	4 / 15**KN	13(M6)*** 25(M8) kN	6 bar	< 0,005 mm	1.9 kg

* With screws DIN EN ISO 4762 - 12.9 / ** With "turbo effect" / *** Screws EN-ISO10642

BASIC
Zero point clamping module

APS 140-E

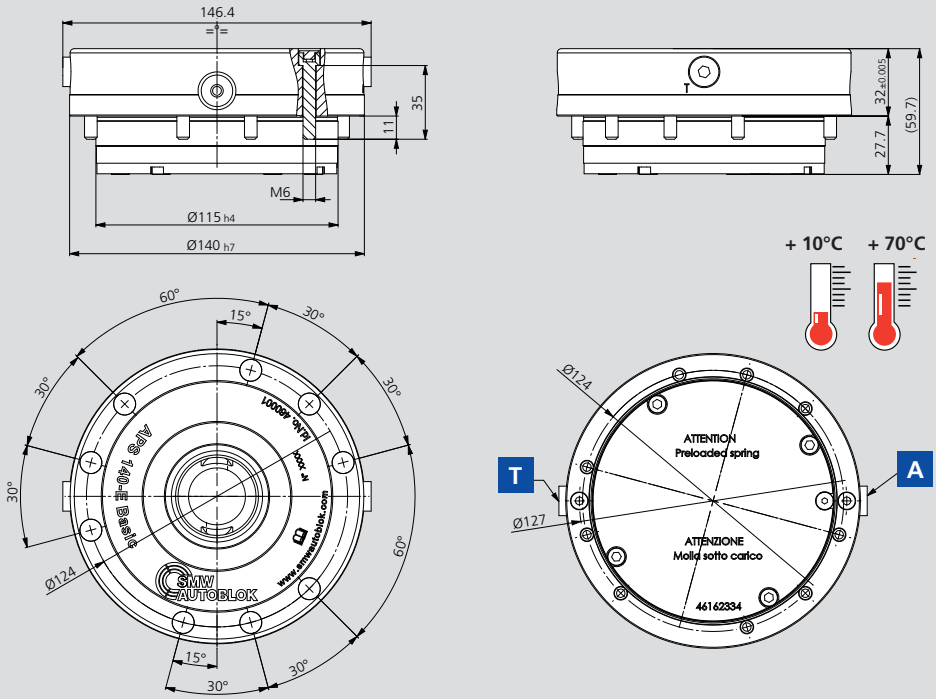

Technical features

- 2 clamping slides
- Turbo function **T**
  to increase the clamping force

A = Open

Subject to technical changes.

Type	Id. No.	Pull-down force	Holding force*	Unlocking pressure	Repeatability	Weight
APS 140-E BASIC	460001	7.5 / 26**KN	35(M10) 50(M12) 75(M16) kN	6 bar	< 0,005 mm	4.5 kg

* With screws DIN EN ISO 4762 - 12.9 / ** With "Turbo effect"

PREMIUM LIGHT
Zero point clamping module

APS 140-E

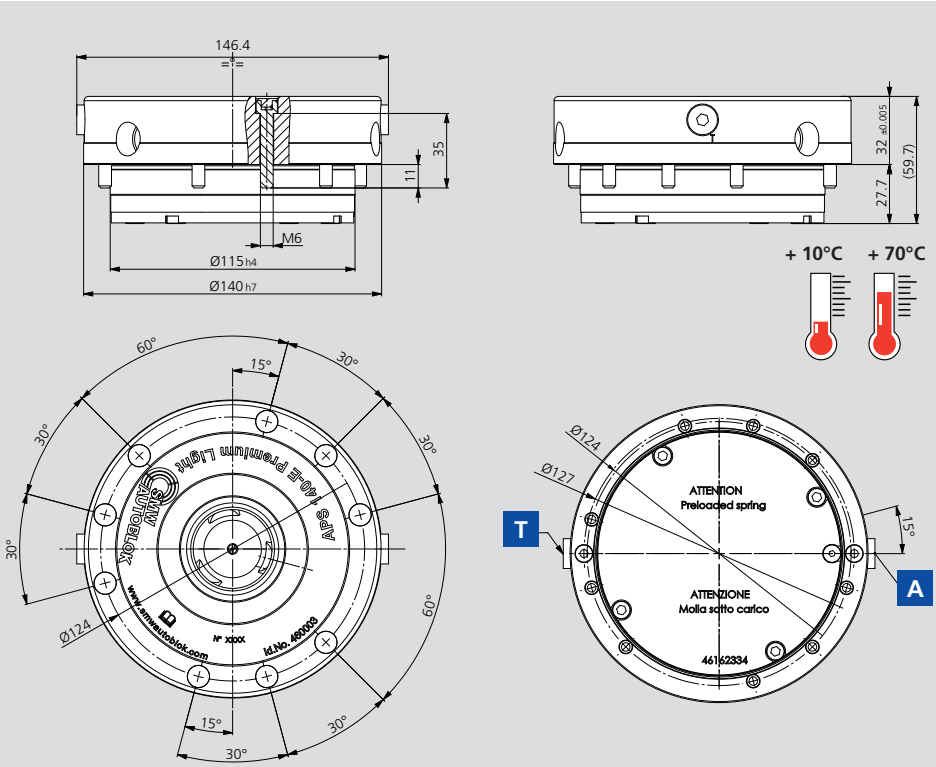

Technical features

- 3 clamping slides
- Turbo function **T**
  to increase the clamping force
- Air cleaning

A = Open

Subject to technical changes.

Type	Id. No.	Pull-down force	Holding force*	Unlocking pressure	Repeatability	Weight
APS 140-E PREMIUM LIGHT	460003	7.5 / 26**KN	35(M10) 50(M12) 75(M16) kN	6 bar	< 0,005 mm	4.5 kg

* With screws DIN EN ISO 4762 - 12.9 / ** With "Turbo effect"

APS 140-E

PREMIUM LIGHT SC

Zero point clamping module

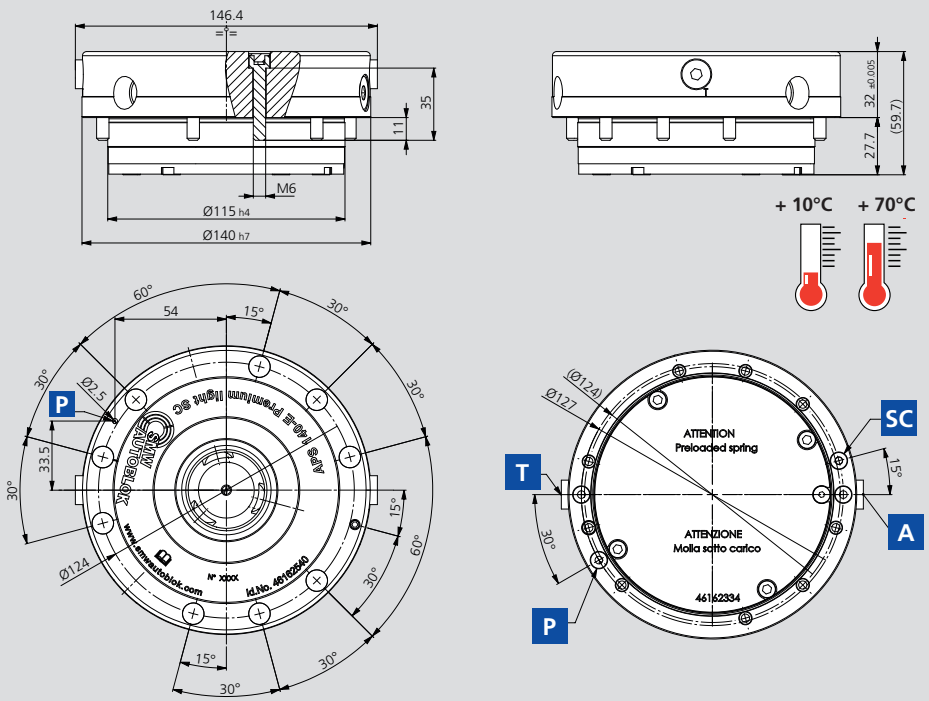

Technical features

- 3 Clamping slides
- Turbo function T
  to increase the clamping force
- Pneumatic stroke control SC
- Air sensing P
- Air cleaning

A = Open

Subject to technical changes.

Type	Id. No.	Pull-down force	Holding force*	Unlocking pressure	Repeatability	Weight
APS 140-E PREMIUM LIGHT SC	46162540	7.5 / 26**KN	35(M10) 50(M12) 75(M16) kN	6 bar	< 0,005 mm	4.5 kg

* With screws DIN EN ISO 4762 - 12.9 / ** With "Turbo effect"

APS 140-E

PREMIUM SC

Zero point clamping module

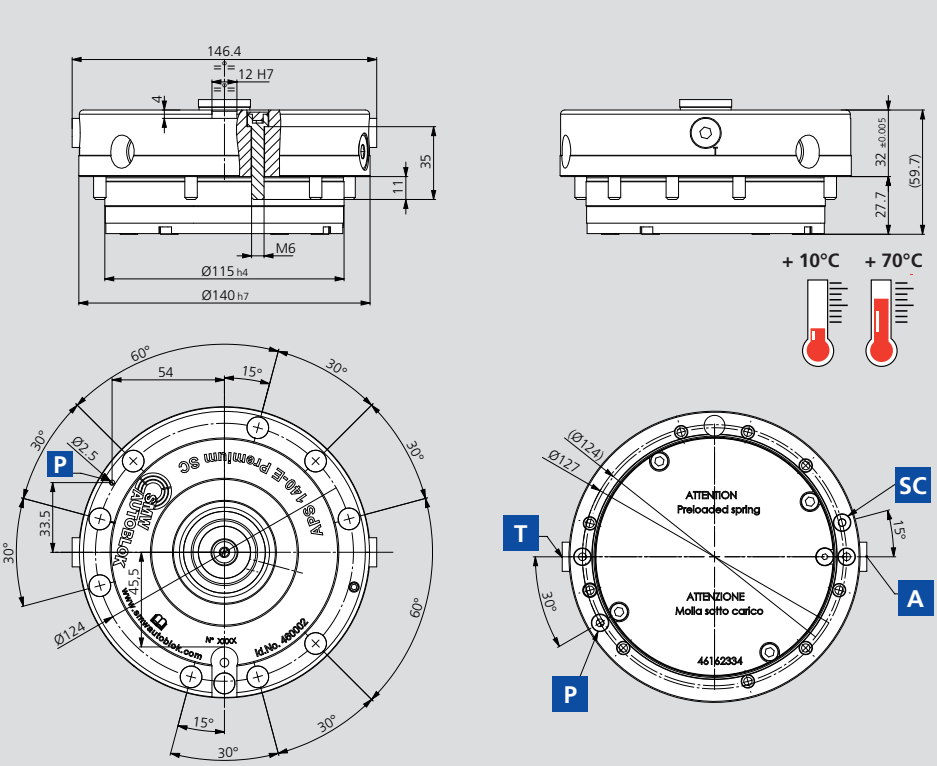

Technical features

- 3 Clamping slides
- Turbo function T
  to increase the clamping force
- Pneumatic stroke control SC
- Air sensing P
- Air cleaning
- Anti-rotation key seat

A = Open

Subject to technical changes.

Type	Id. No.	Pull-down force	Holding force*	Unlocking pressure	Repeatability	Weight
APS 140-E PREMIUM SC	460002	7.5 / 26**KN	35(M10) 50(M12) 75(M16) kN	6 bar	< 0,005 mm	4.5 kg

* With screws DIN EN ISO 4762 - 12.9 / ** With "Turbo effect"

PREMIUM LIGHT INOX
Zero point clamping module

APS 140-E

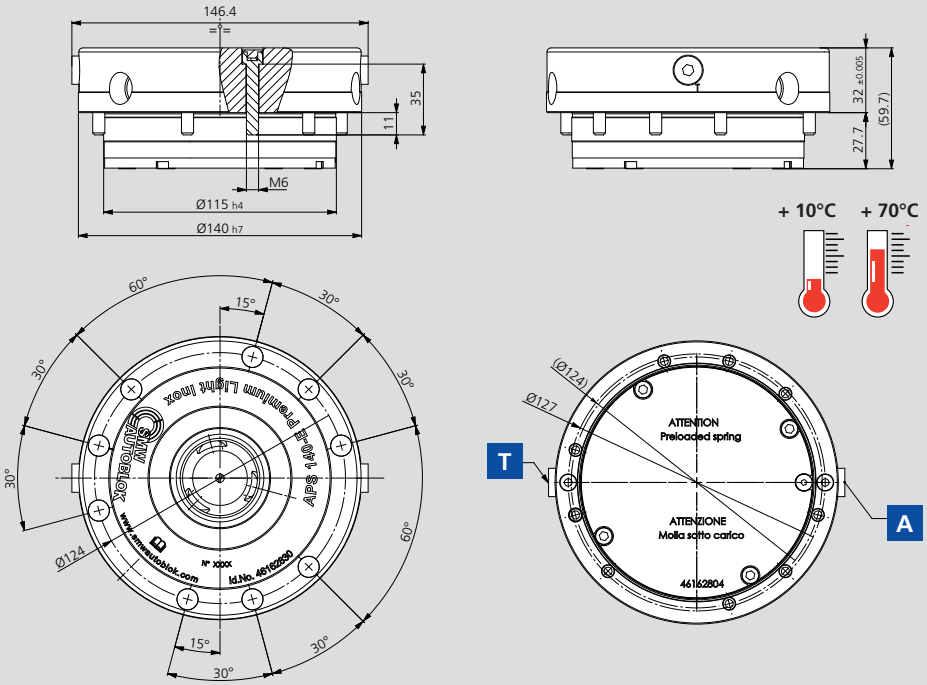

Technical features

- Inox body
- 3 clamping slides
- Turbo function **T**
  to increase the clamping force
- Ideal for EDM Machines

A = Open

Subject to technical changes.

Type	Id. No.	Pull-down force	Holding force*	Unlocking pressure	Repeatability	Weight
APS 140-E PREMIUM LIGHT INOX	46162830	7.5 / 26**KN	35(M10) 50(M12) 75(M16) kN	6 bar	< 0,005 mm	4.5 kg

* With screws DIN EN ISO 4762 - 12.9 / ** With "Turbo effect"

PREMIUM LIGHT INOX-HEAT
Zero point clamping module

APS 140-E

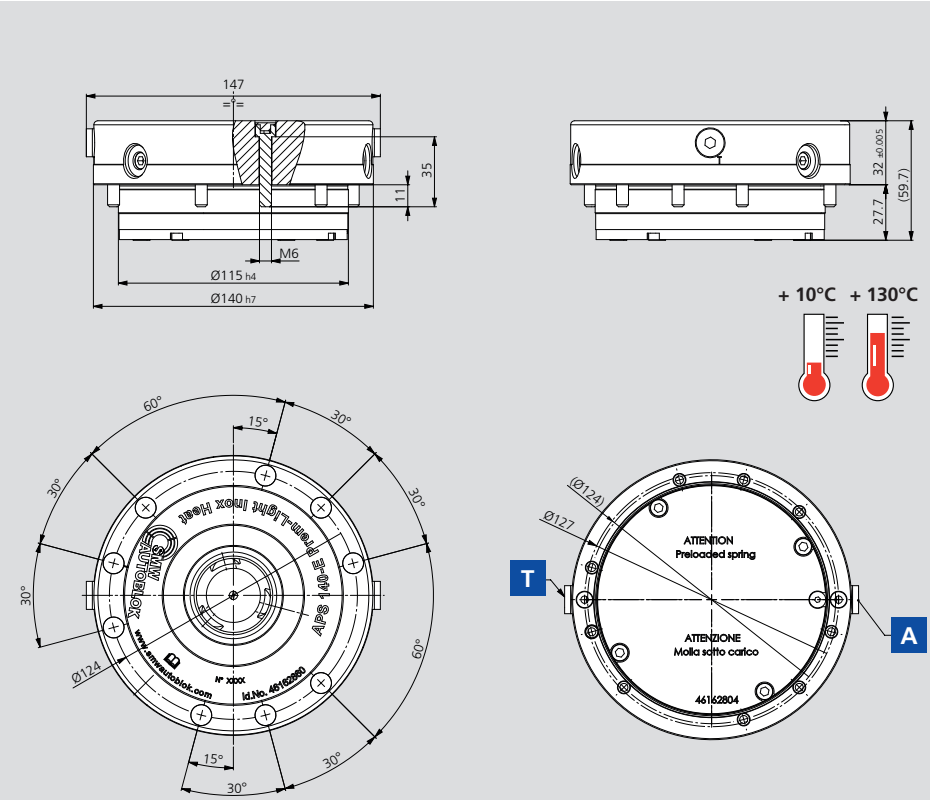

Technical features

- Inox body
- 3 clamping slides
- Turbo function **T**
  to increase the clamping force
- Ideal for HT

A = Open

Subject to technical changes.

Type	Id. No.	Pull-down force	Holding force*	Unlocking pressure	Repeatability	Weight
APS 140-E PREMIUM LIGHT INOX-HEAT	46162860	7.5 / 26**KN	35(M10) 50(M12) 75(M16) kN	6 bar	< 0,005 mm	4.5 kg

* With screws DIN EN ISO 4762 - 12.9 / ** With "Turbo effect"

APS 140-I

PREMIUM LIGHT
Zero point clamping module

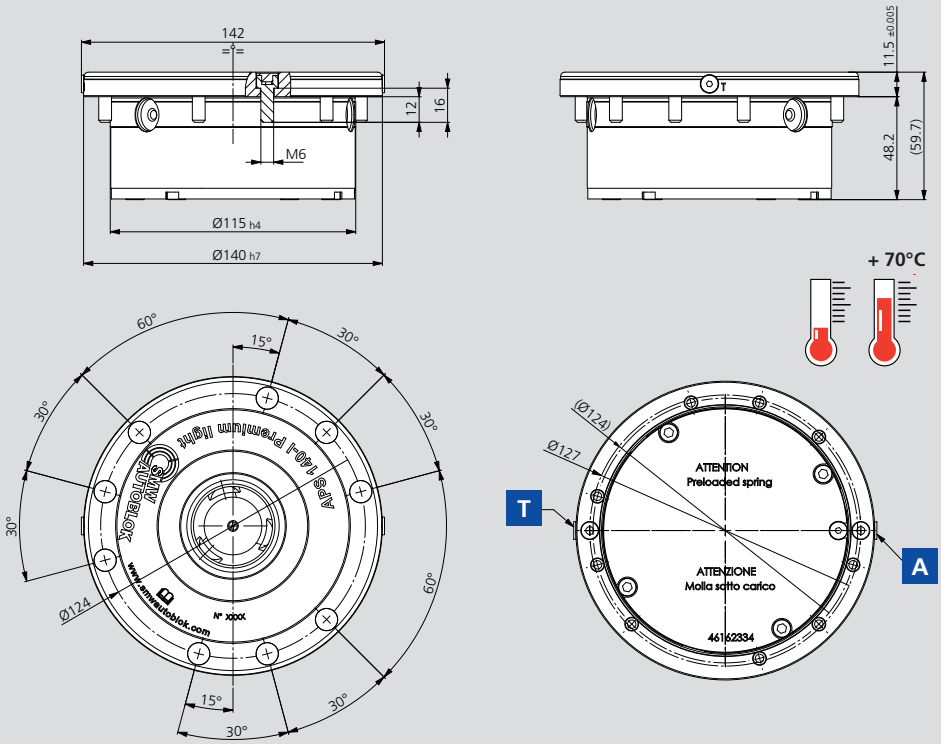

Technical features
- 3 clamping slides
- Turbo function **T**
  to increase the clamping force
- Air cleaning

A = Open

Subject to technical changes.

Type	Id. No.	Pull-down force	Holding force*	Unlocking pressure	Repeatability	Weight
APS 140-I PREMIUM LIGHT	46162480	7.5 / 26**KN	35(M10) 50(M12) 75(M16) kN	6 bar	< 0,005 mm	4.5 kg

* With screws DIN EN ISO 4762 - 12.9 / ** With "Turbo effect"

APS 160-E

PREMIUM LIGHT SC
Zero point clamping module

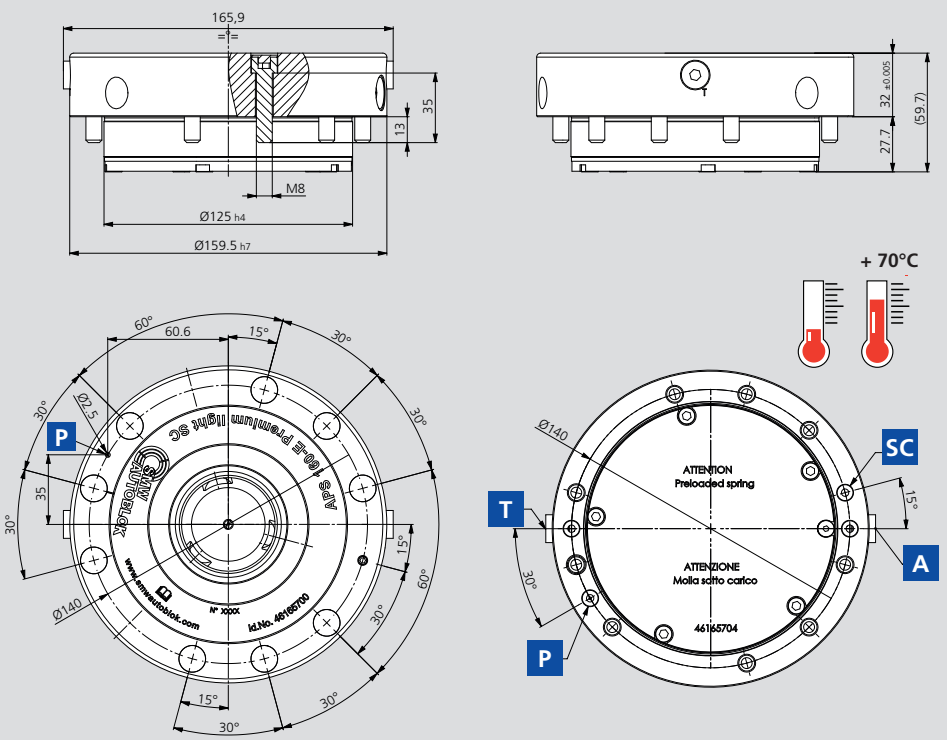

Technical features
- 3 Clamping slides
- Turbo function **T**
  to increase the clamping force
- Air sensing **P**
- Air cleaning
- Pneumatic stroke control **SC**

A = Open

Subject to technical changes.

Type	Id. No.	Pull-down force	Holding force*	Unlocking pressure	Repeatability	Weight
APS 160-E PREMIUM LIGHT SC	46165700	9 / 30**KN	50(M12) 75(M16) kN	6 bar	< 0,005 mm	5.9 kg

* With screws DIN EN ISO 4762 - 12.9 / ** With "Turbo effect"

PREMIUM SC
Zero point clamping module

APS 190-E

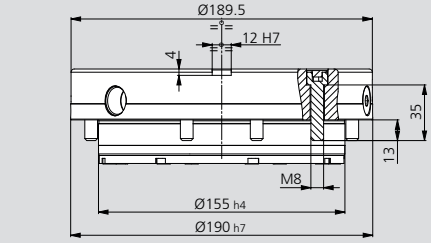

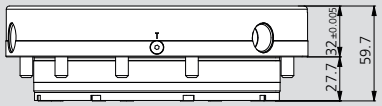

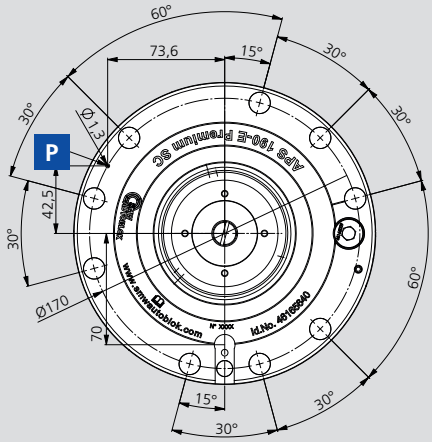

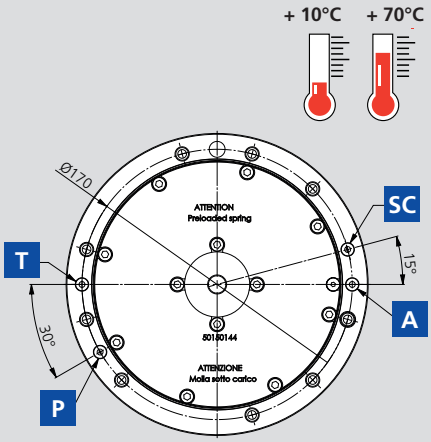

Subject to technical changes.

Technical features

- 3 clamping slides
- Turbo function **T**
  to increase the clamping force
- Anti-rotation key seat
- Air sensing **P**
- Pneumatic stroke control **SC**

A = Open

Type	Id. No.	Pull-down force	Holding force*	Unlocking pressure	Repeatability	Weight
APS 190-E PREMIUM SC	46165640	13.5 / 45**KN	50(M12) 75(M16) 80(6xM6) 150(6xM8) kN	6 bar	< 0,005 mm	6.9 kg

* With screws DIN EN ISO 4762 - 12.9 / ** With "turbo effect"

PREMIUM SC 2-INN
Zero point clamping module

APS 190-E

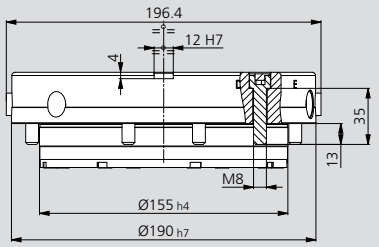

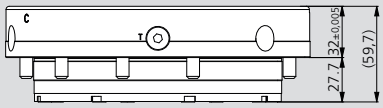

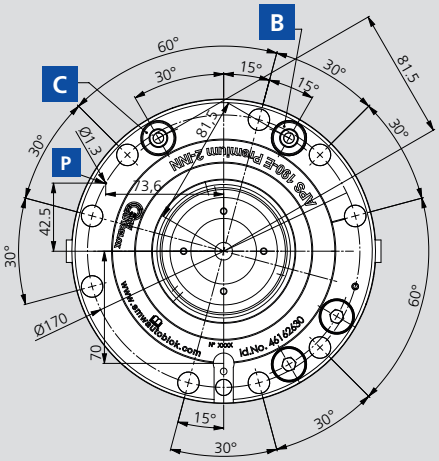

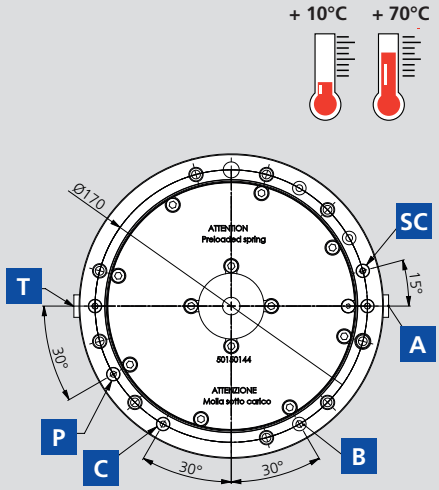

Subject to technical changes.

Technical features

- 3 Clamping slides
- Turbo function **T**
  to increase the clamping force
- Anti-rotation key seat
- Air sensing **P**
- Pneumatic stroke control **SC**
- N.2 Pneumatic/Hydraulic feedings **B** **C**

A = Open

Type	Id. No.	Pull-down force	Holding force*	Unlocking pressure	Repeatability	Weight
APS 190-E PREMIUM SC 2-INN	46162630	13.5 / 45**KN	50(M12) 75(M16) 80(6xM6) 150(6xM8) kN	6 bar	< 0,005 mm	6.9 kg

* With screws DIN EN ISO 4762 - 12.9 / ** With "turbo effect"

APS 190-E

PREMIUM SC 4-INN
Zero point clamping module

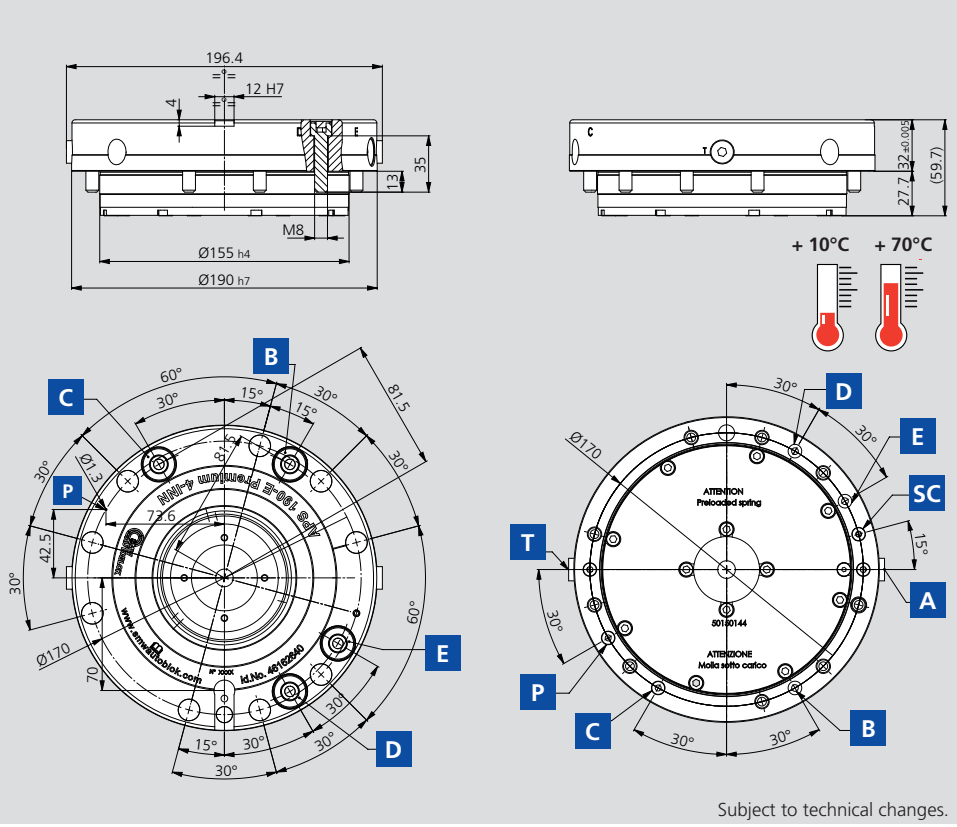

Subject to technical changes.

Technical features
- 3 clamping slides
- Turbo function T
  to increase the clamping force
- Anti-rotation key seat
- Air sensing P
- Pneumatic stroke control SC
- N.4 pneumatic / hydraulic feedings
  B C D E

A = Open

Type	Id. No.	Pull-down force	Holding force*	Unlocking pressure	Repeatability	Weight
APS 190-E PREMIUM SC 4-INN	46162640	13.5 / 45**KN	50(M12) 75(M16) 80(6xM6) 150(6xM8) kN	6 bar	< 0,005 mm	6.9 kg

* With screws DIN EN ISO 4762 - 12.9 / ** With "Turbo effect"

APS 250-E

PREMIUM SC
Zero point clamping module

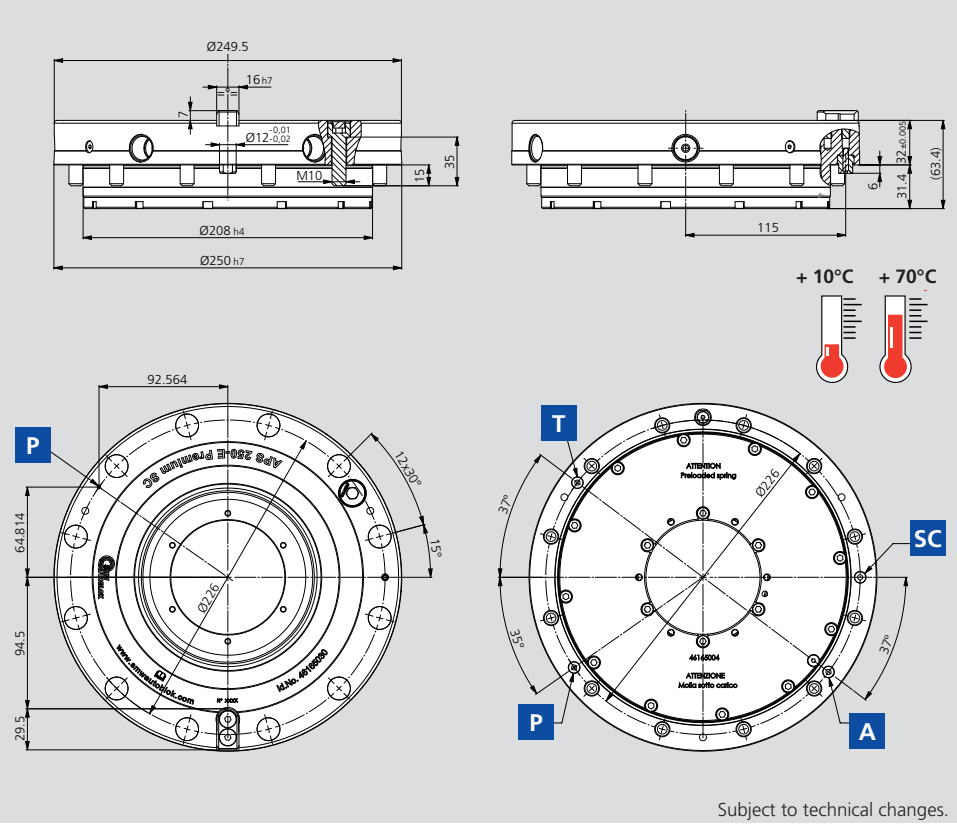

Subject to technical changes.

Technical features
- 6 clamping slides
- Turbo function T
  to increase the clamping force
- Anti-rotation key seat
- Air sensing P
- Pneumatic stroke control SC

A = Open

Type	Id. No.	Pull-down force	Holding force*	Unlocking pressure	Repeatability	Weight
APS 250-E PREMIUM SC	46165030	18 / 55**KN	300(6xM12) 210(6xM10) 375(15xM8) kN	6 bar	< 0,005 mm	15 kg

* With screws DIN EN ISO 4762 - 12.9 / ** With "Turbo effect"

Clamping pins

Industry 4.0 Product

1 Type and position of the clamping pins

Type A
Centering pin
- Used for centering and clamping

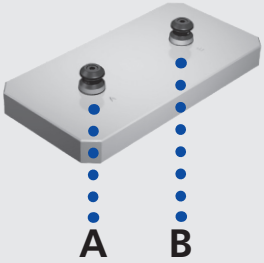

Type B
Reference pin
- Used for reference and clamping

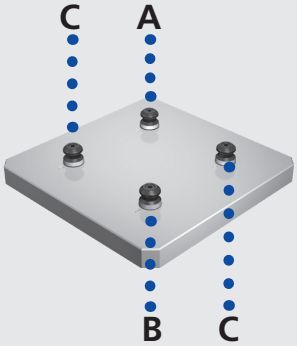

Type C
Pull-down pin
± 0.05 mm
- Only for clamping

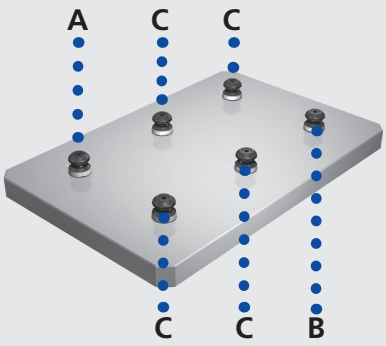

2 Positioning of the sword pin type B

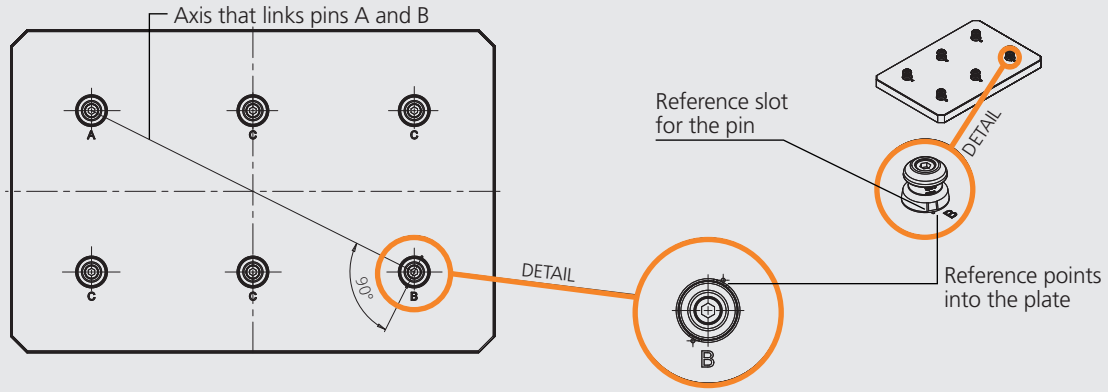

3 Tightening torque for pins mounting bolts

Bolts	Nm
M6	13
M8	35
M10	60
M12	110
M16	200

APS 100 Pins

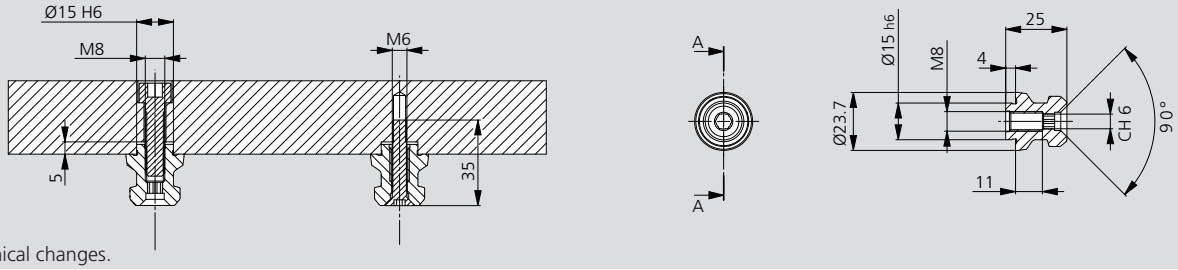

Subject to technical changes.

Id. No.	Type		Weight [kg]
46162155	A	M8	0.05
46162156	B	M8	0.05
46162157	C	M8	0.05

APS 140 Pins - M12 thread

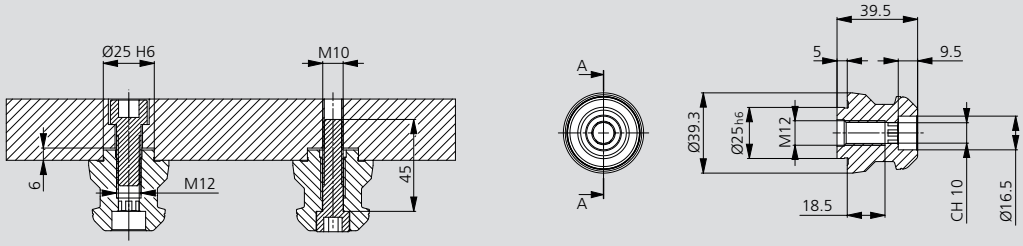

Subject to technical changes.

Id. No.	Type		Weight [kg]
46162355	A	M12	0.2
46162356	B	M12	0.2
46162357	C	M12	0.2

APS 140 Pins - M16 thread

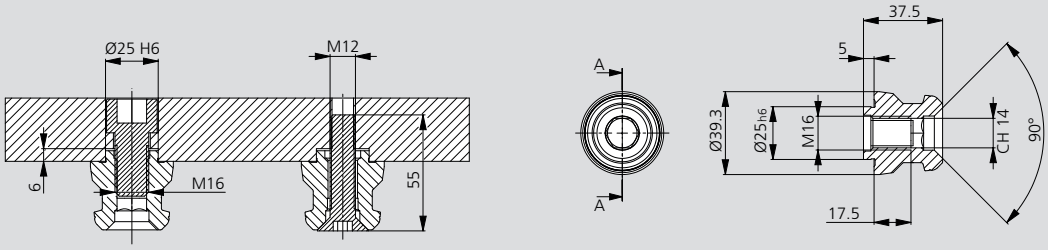

Subject to technical changes.

Id. No.	Type		Weight [kg]
46162455	A	M16	0.2
46162456	B	M16	0.2
46162457	C	M16	0.2

APS 140 Pins type C floating

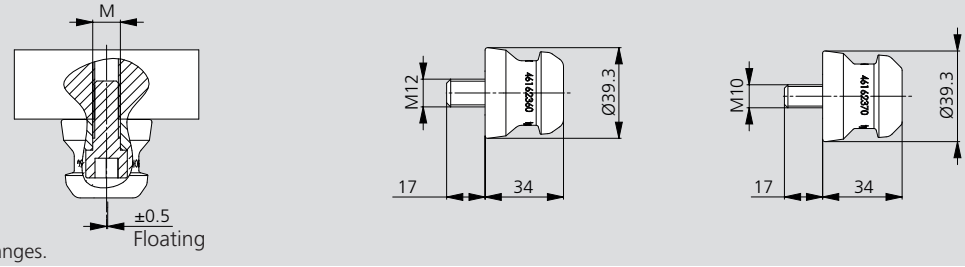

Subject to technical changes.

Id. No.	Type		Weight [kg]
46162370	C - Floating ± 0.5 mm	M10	0.2
46162360	C - Floating ± 0.5 mm	M12	0.2

Pins - M16 thread

APS 160

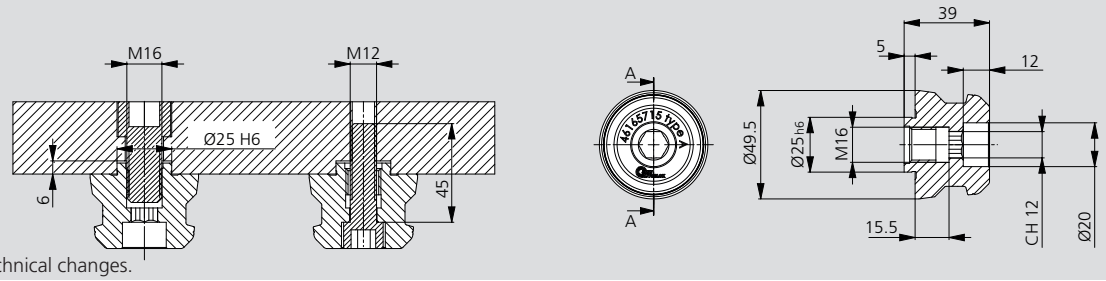

Subject to technical changes.

Id. No.	Type		Weight [kg]
46165715	A	M16	0.35
46165716	B	M16	0.35
46165717	C	M16	0.35

Pins - D17 (for M16 screws 12.9)

APS 160

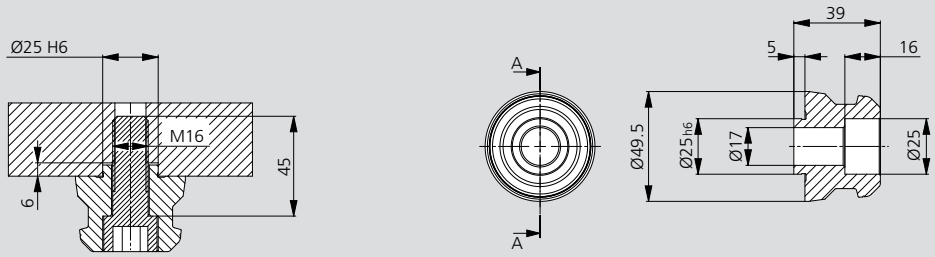

Subject to technical changes.

Id. No.	Type		Weight [kg]
46165705	A	D17	0.3
46165706	B	D17	0.3
46165707	C	D17	0.3

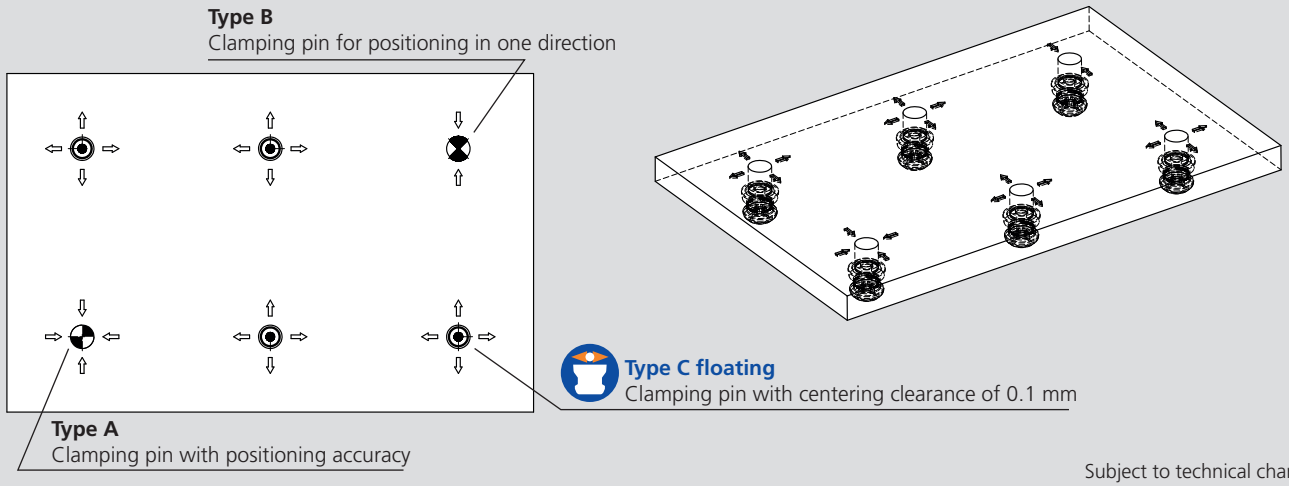

Subject to technical changes.

Pins type C floating

APS 160

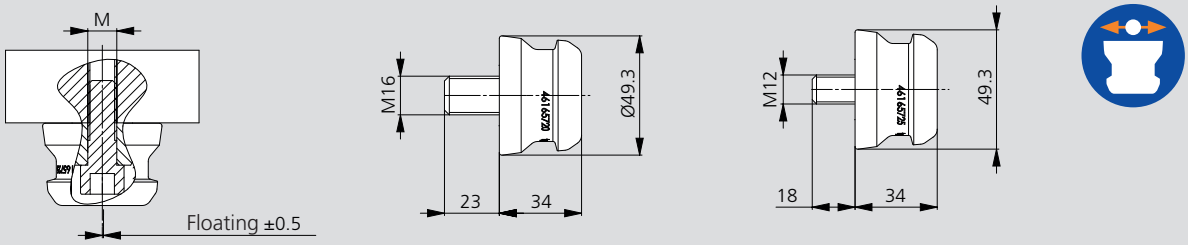

Subject to technical changes.

Id. No.	Type		Weight [kg]
46165720	C - Floating ± 0,5 mm	M16	0.4
46165725	C - Floating ± 0,5 mm	M12	0.35

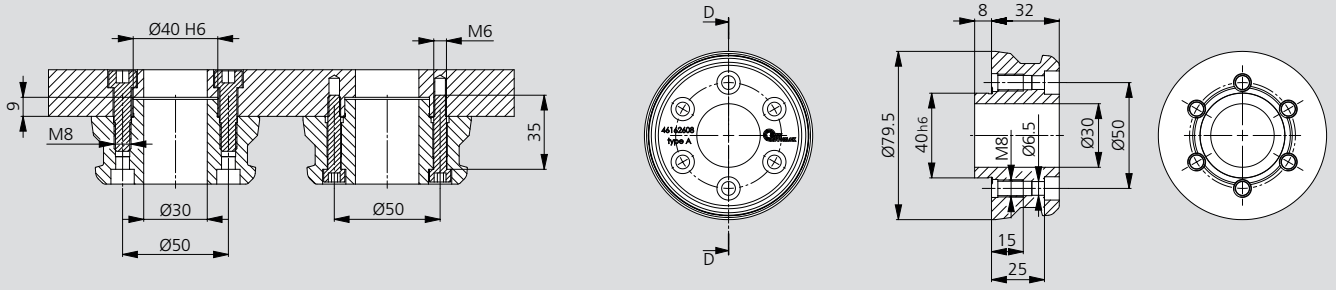

Subject to technical changes.

Id. No.	Type	Weight [kg]	Note
46162608	A	0.85	Pin with central hole Ø 30

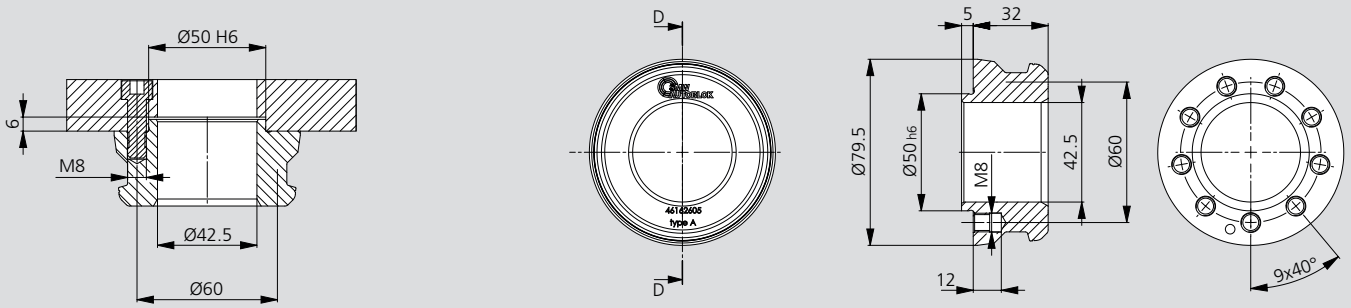

Subject to technical changes.

Id. No.	Type	Weight [kg]	Note
46162605	A	0.7	Pin with central hole Ø 42

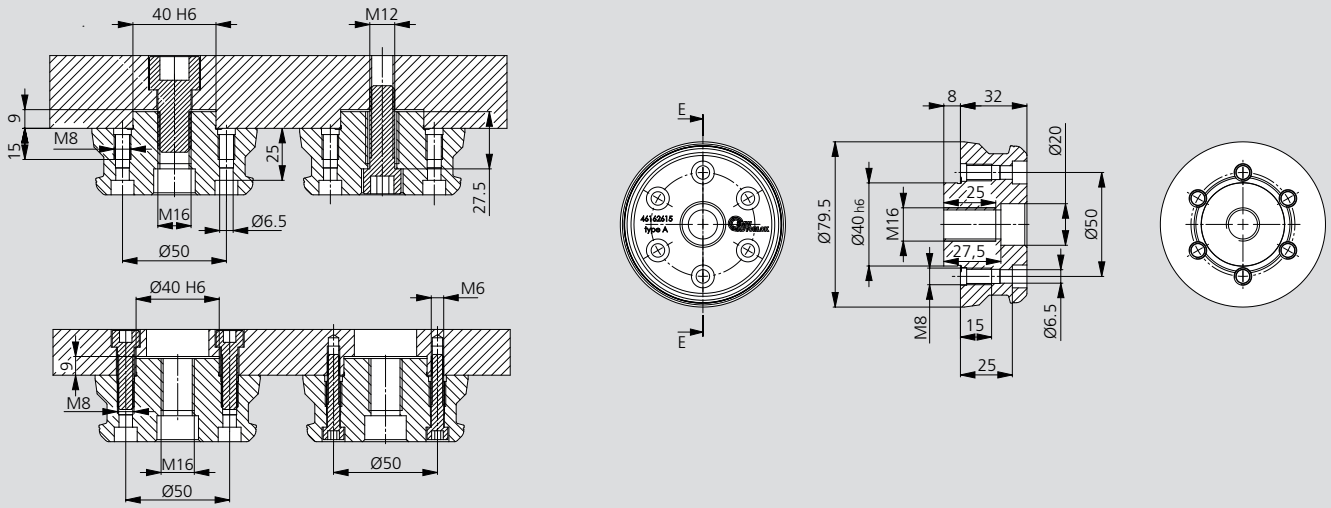

Subject to technical changes.

Id. No.	Type		Weight [kg]
46162615	A	M16	1
46162616	B	M16	1
46162617	C	M16	1

Pins

APS 190

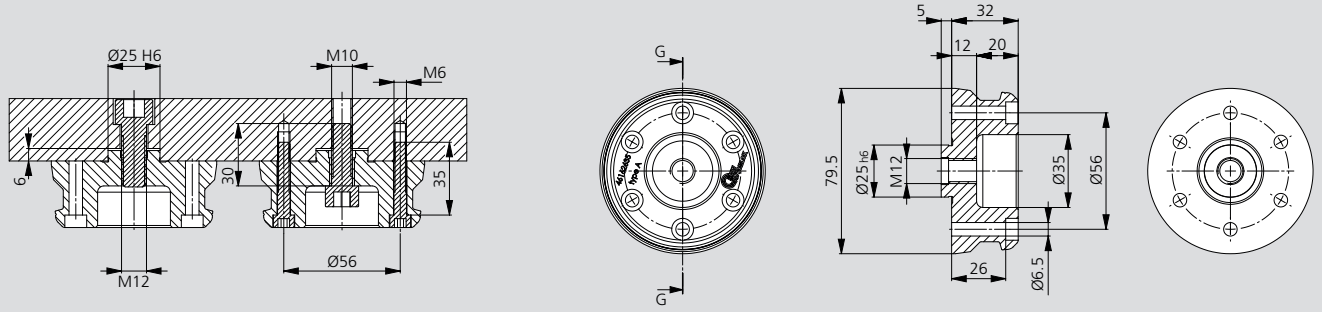

Subject to technical changes.

Id. No.	Type		Weight [kg]
46162635	A	Mounting pin = To the pin APS-140 M12	0.85

Pins

APS 250

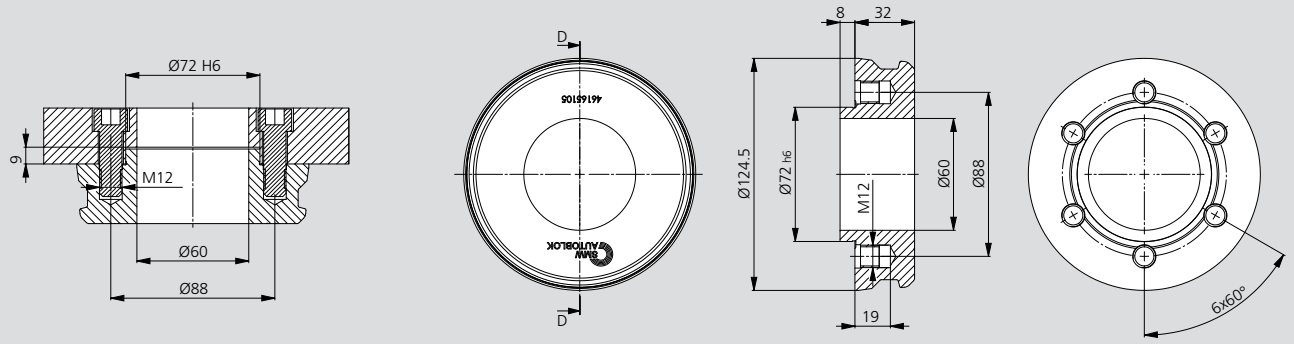

Subject to technical changes.

Id. No.	Type	Weight [kg]	Note
46165105	A	2	Pin with central hole Ø 60

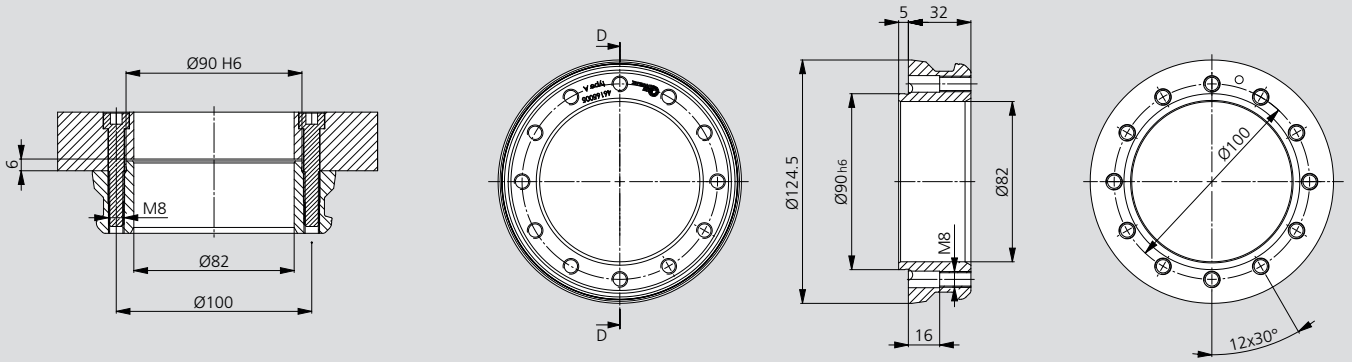

Subject to technical changes.

Id. No.	Type	Weight [kg]	Note
46165005	A	1.3	Pin with central hole Ø 82

APS / WPS 140 Pins type C floating

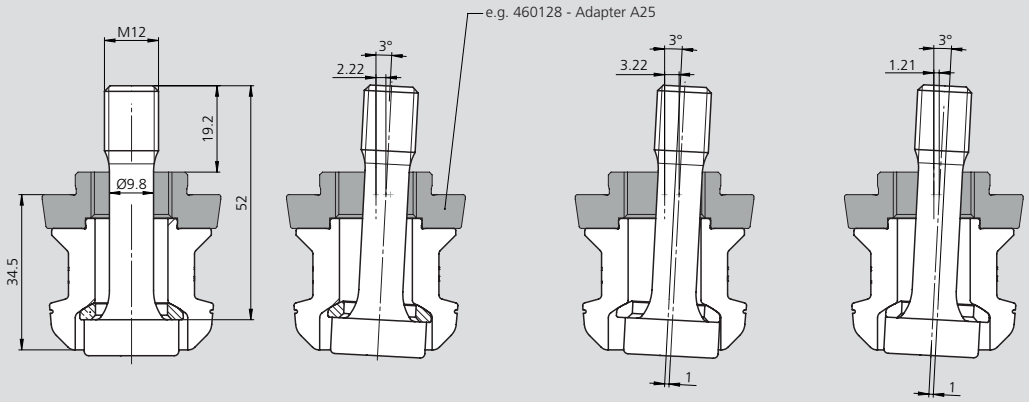

Subject to technical changes.

Id. No.	Type		Weight [kg]	Note
460421	C	M12	0.25	Max. holding force 35 kN
460449	C	M16	0.25	Max. holding force 35 kN

APS
Clamping unit fully assembled
Ready for use

Industry 4.0 Product

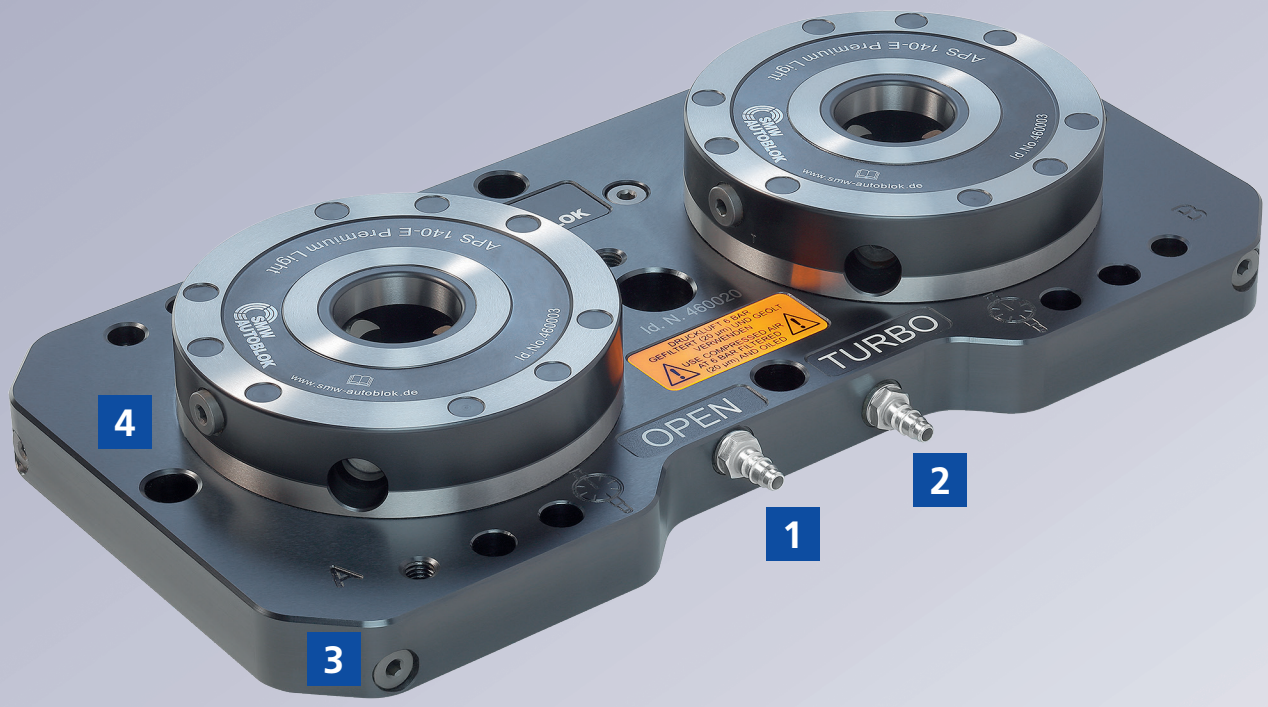

1 Functional overview of the APS clamping units

- Quick pneumatic connections **1**
- Turbo function for highest pull-in forces **2**
- Solid base plate (height 28 mm) for maximum stiffness at a total height of only 60 mm **3**
- Easy mounting on the machine table due to positioning holes **4**

APS 140

Clamping unit

Application/customer benefits

- Pre-assembled clamping unit with 2 pieces APS 140 Premium Light or Basic
- Universal applicable
- Fast and easy set-up

Technical features

- 3 clamping slides (Basic: 2 clamping slides)
- Repeatability < 0.005 mm
- Turbo function for increasing the pull-in forces (pull-in force without Turbo 7.5 kN)
- Air cleaning (only Premium Light)
- Grid dimension 200 mm

Standard equipment

Clamping unit with 2 pieces APS 140 Premium Light or Basic
Quick pneumatic connections

For clamping pallets please see page 56

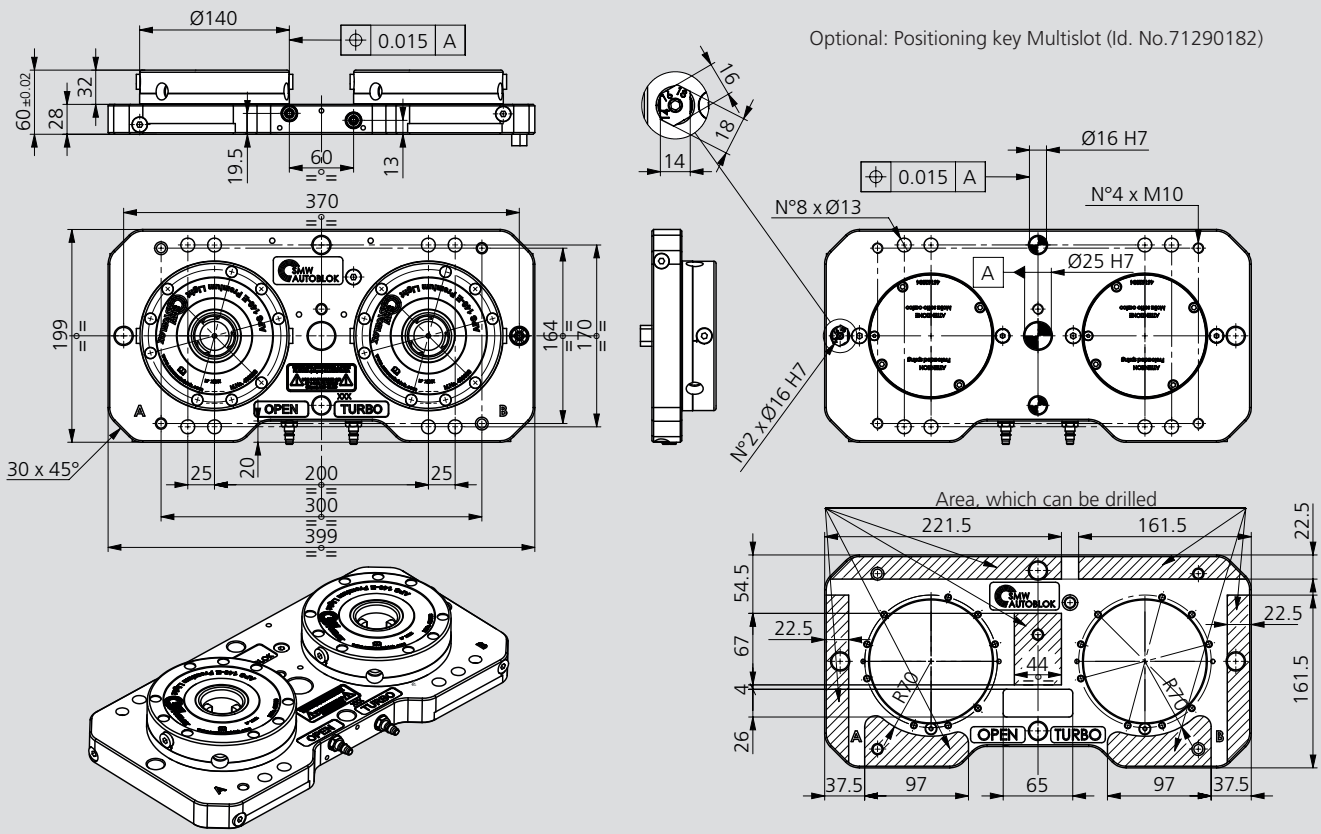

Subject to technical changes.

Order numbers

Type	Id. No.	Pull-in force with Turbo [kN]	Repeatability [mm]	Weight [kg]
Clamping unit with 2 APS 140-E Premium Light	460020	26*	< 0.005	21
Clamping unit with 2 APS 140-E Basic	460021	26*	< 0.005	21

* For each module.

APS 140

Application/customer benefits

- Pre-assembled clamping unit with 4 pieces APS 140 Premium Light or Basic
- Universal applicable
- Fast and easy set-up

Technical features

- 3 clamping slides (Basic: 2 clamping slides)
- Repeatability < 0.005 mm
- Pull-in force without Turbo 7.5 kN
- Air cleaning (only Premium Light)
- Grid dimension 200 mm

Standard equipment

Clamping unit with 4 pieces APS 140
Quick pneumatic connections
For clamping pallets please see page 56

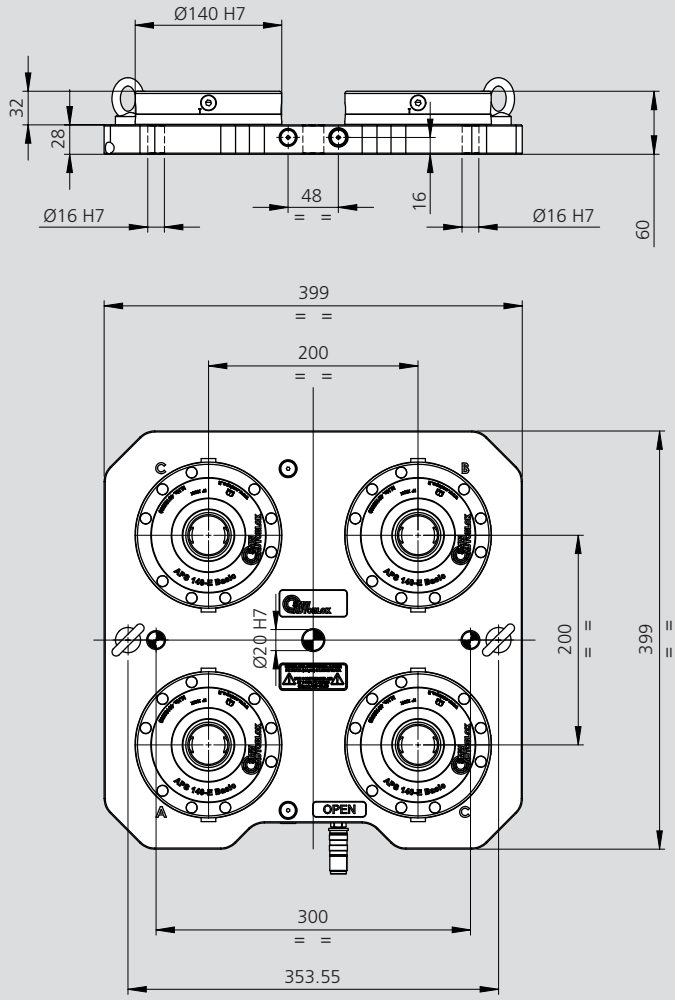

Optional: Positioning key Multislot (Id. No. 71290182)

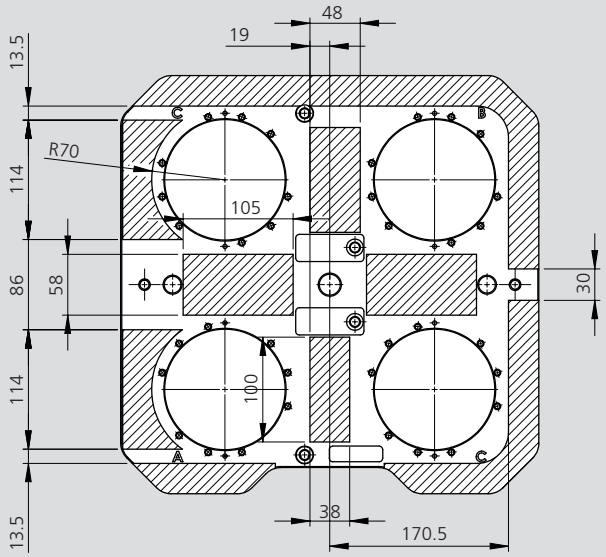

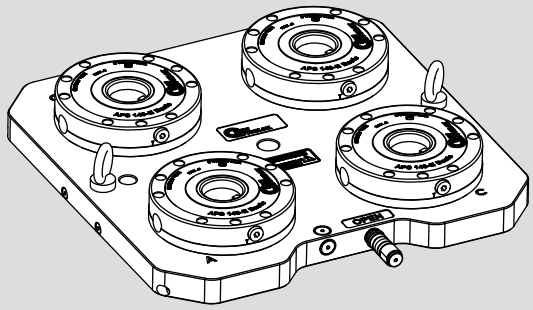

Subject to technical changes.

Order numbers

Type	Id. No.	Pull-in force without Turbo [kN]	Repeatability [mm]	Weight [kg]
Clamping unit with 4 APS 140-E Basic	46168215	7.5*	< 0.005	41

* For each module.

APS 140

Clamping unit

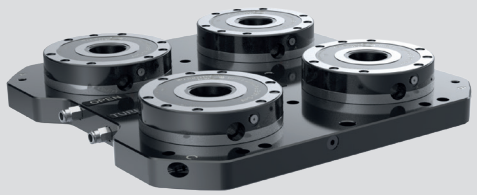

Application/customer benefits

- Pre-assembled clamping unit with 4 pieces APS 140 Premium Light or Basic
- Universal applicable
- Fast and easy set-up
- Suitable for vertical machines

Technical features

- 3 clamping slides (Basic: 2 clamping slides)
- Repeatability < 0.005 mm
- Turbo function for increasing the pull-in forces (pull-in force without Turbo 7.5 kN)
- Air cleaning (only Premium Light)
- Grid dimension 200 mm

Standard equipment

Clamping unit with 4 pieces APS 140 Premium Light or Basic
Quick pneumatic connections

For clamping pallets please see page 56

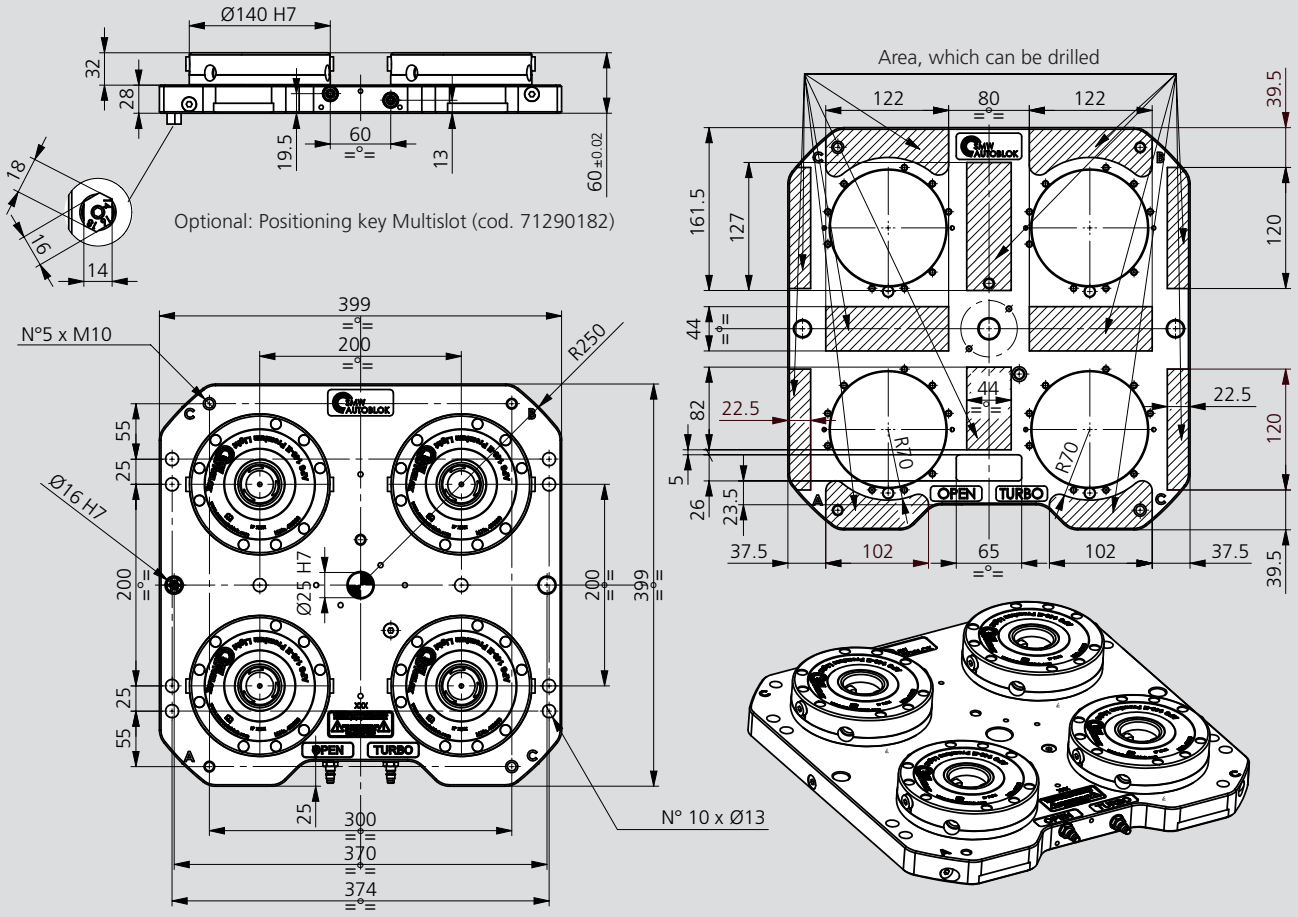

Subject to technical changes.

Order numbers

Type	Id. No.	Pull-in force with Turbo [kN]	Repeatability [mm]	Weight [kg]
Clamping unit with 4 APS 140-E Premium Light	460022	26*	< 0.005	41
Clamping unit with 4 APS 140-E Basic	460023	26*	< 0.005	41

* For each module.

Clamping unit

APS 140

■ Preferably for horizontal machining center

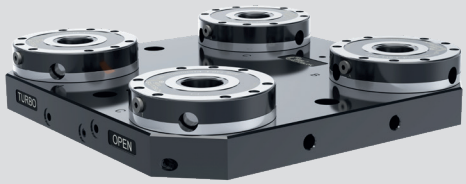

Application/customer benefits

- Pre-assembled clamping unit with 4 pieces APS 140 Premium Light or Basic
- Suitable for standard machine pallets type JIS 6337-1980
- Universal applicable
- Fast and easy set-up

Technical features

- 3 clamping slides (Basic: 2 clamping slides)
- Repeatability < 0.005 mm
- Turbo function for increasing the pull-in forces (pull-in force without Turbo 7.5 kN)
- Air cleaning (only Premium Light)

Standard equipment

Clamping unit with 4 pieces APS 140 Premium Light or Basic
Quick pneumatic connections

For clamping pallets please see page 56

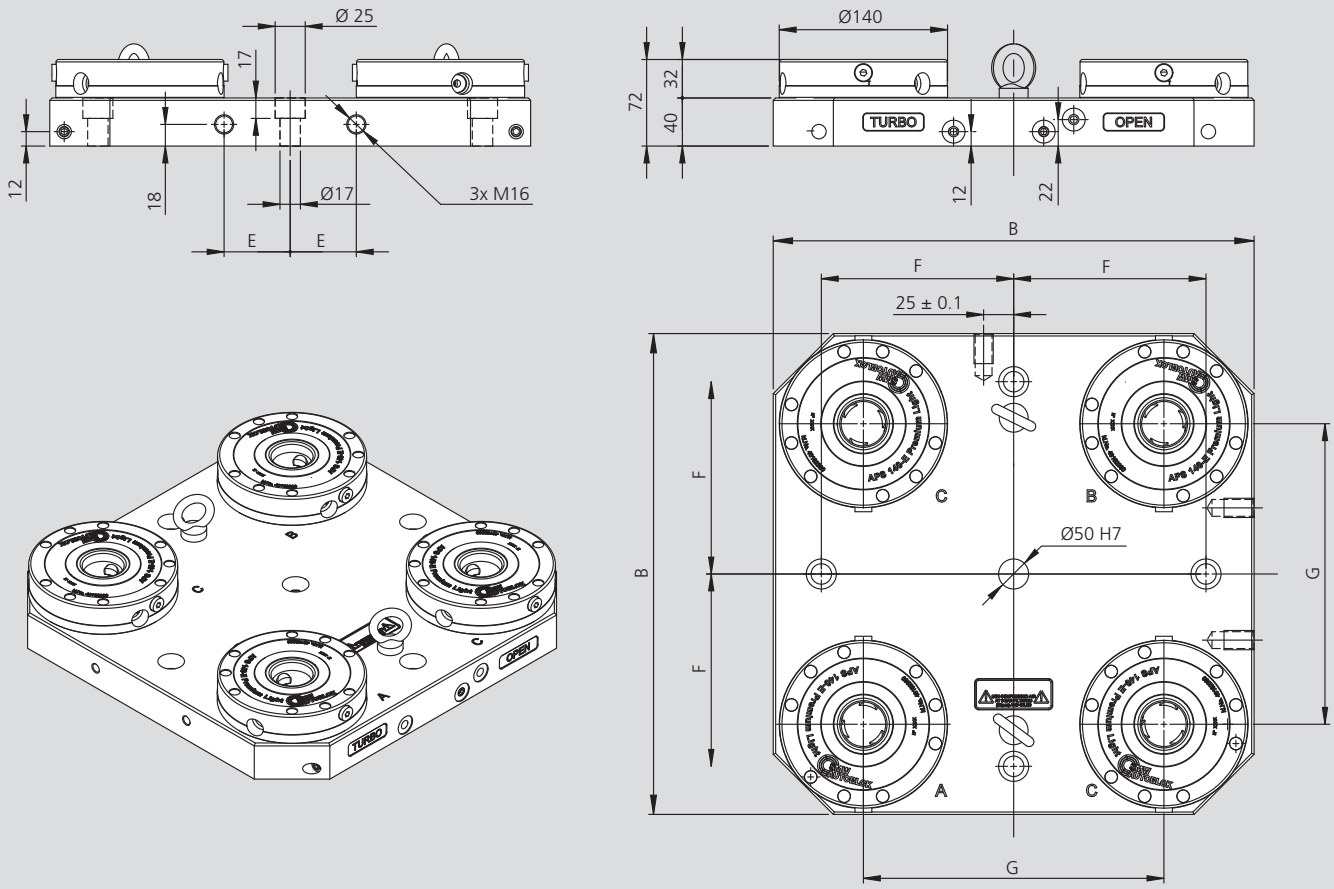

Subject to technical changes.

Order numbers

Type	Id. No.	B [mm]	E [mm]	F [mm]	G [mm]	Pull-in force with Turbo [kN]	Repeatability [mm]	Weight [kg]
Clamping unit with 4 APS 140 Premium Light	46167040	400	55	160	250	26*	< 0.005	57
Clamping unit with 4 APS 140 Basic	46167045	400	55	160	250	26*	< 0.005	57
Clamping unit with 4 APS 140 Premium Light	46167050	500	75	200	300	26*	< 0.005	85
Clamping unit with 4 APS 140 Basic	46167055	500	75	200	300	26*	< 0.005	85
Clamping unit with 4 APS 140 Premium Light	46167060	630	100	250	420	26*	< 0.005	130
Clamping unit with 4 APS 140 Basic	46167065	630	100	250	420	26*	< 0.005	130

* For each module.

APS 140

Clamping unit

■ For 5-axis machining center

Application/customer benefits

- Pre-assembled clamping unit with 4 pieces APS 140 Premium Light or Basic
- For 5-axis machining center
- Universal applicable
- Fast and easy set-up

Technical features

- 3 clamping slides (Basic: 2 clamping slides)
- Repeatability < 0.005 mm
- Turbo function for increasing the pull-in forces (pull-in force without Turbo 7.5 kN)
- Air cleaning (only Premium Light)

Standard equipment

Clamping unit with 4 pieces APS 140 Premium Light or Basic
Quick pneumatic connections

For clamping pallets please see page 56

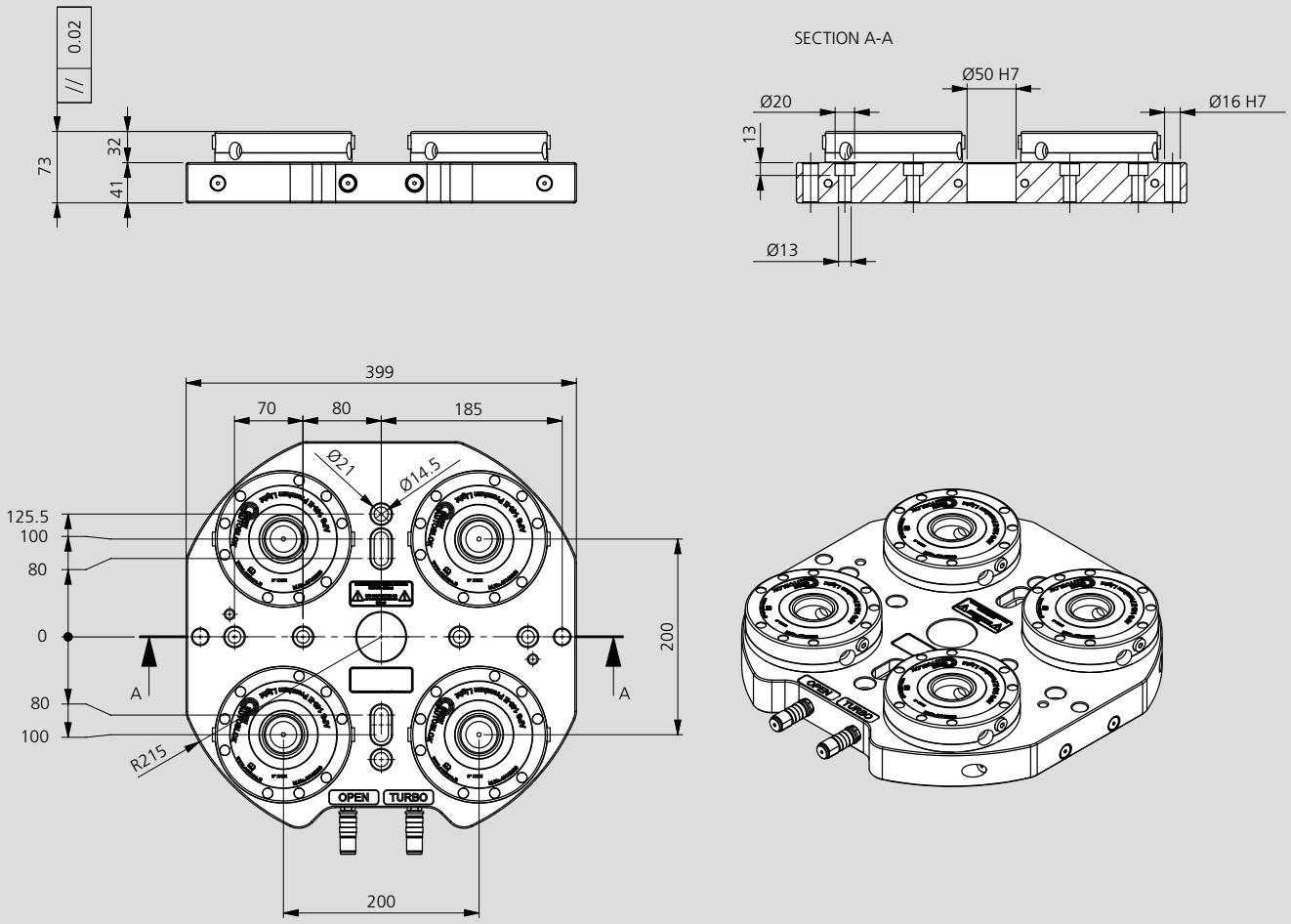

Subject to technical changes.

Special clamping units on request.

Order numbers

Type	Id. No.	Pull-in force with Turbo [kN]	Repeatability [mm]	Weight [kg]
Clamping unit with 4 APS 140 Premium Light	46168020	26*	< 0.005	45
Clamping unit with 4 APS 140 Basic	46168025	26*	< 0.005	45

* For each module.

Clamping unit

■ For 5-axis machining center

APS 140

Application/customer benefits

- Pre-assembled clamping unit with 5 pieces APS 140 Premium Light or Basic
- For 5-axis machining center
- Universal applicable
- Fast and easy set-up

Technical features

- 3 Clamping slides (Basic: 2 Clamping slides)
- Repeatability < 0.005 mm
- Turbo function for increasing the pull-in forces (pull-in force without Turbo 7.5 kN)
- Air cleaning (only Premium Light)
- Grid dimension 250 mm

Standard equipment

Clamping unit with 5 pieces APS 140 Premium Light or Basic
Quick pneumatic connections

For clamping pallets please see page 56

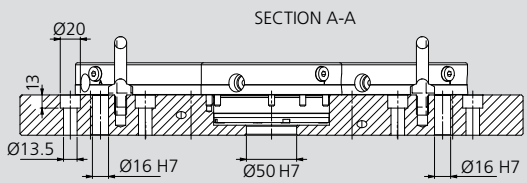

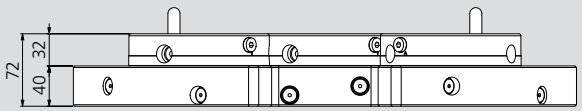

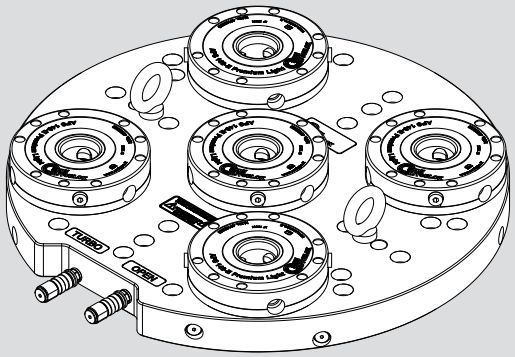

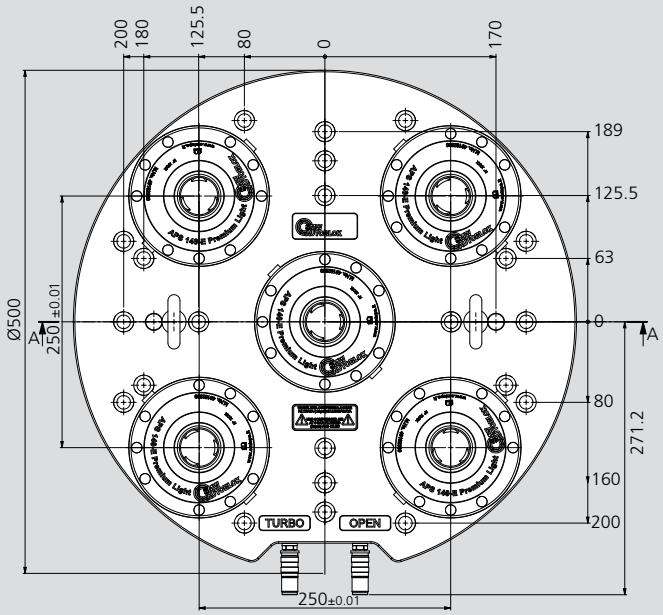

Subject to technical changes.

Special clamping units on request.

Order numbers

Type	Id. No.	Pull-in force with Turbo [kN]	Repeatability [mm]	Weight [kg]
Clamping unit with 5 APS 140 Premium Light	46168030	26*	< 0.005	68
Clamping unit with 5 APS 140 Basic	46168035	26*	< 0.005	67

* For each module.

APS 140

Clamping unit

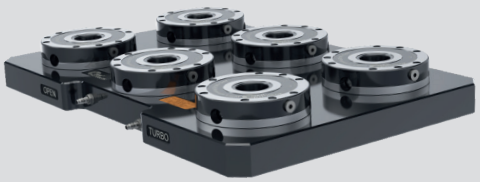

Application/customer benefits

- Pre-assembled clamping unit with 6 pieces APS 140 Premium Light or Basic
- Universal applicable
- Fast and easy set-up

Technical features

- 3 clamping slides (Basic: 2 clamping slides)
- Repeatability < 0.005 mm
- Turbo function for increasing the pull-in forces (pull-in force without Turbo 7.5 kN)
- Air cleaning (only Premium Light)
- Grid dimension 200 mm

Standard equipment

Clamping unit with 6 pieces APS 140 Premium Light or Basic
Quick pneumatic connections

For clamping pallets please see page 56

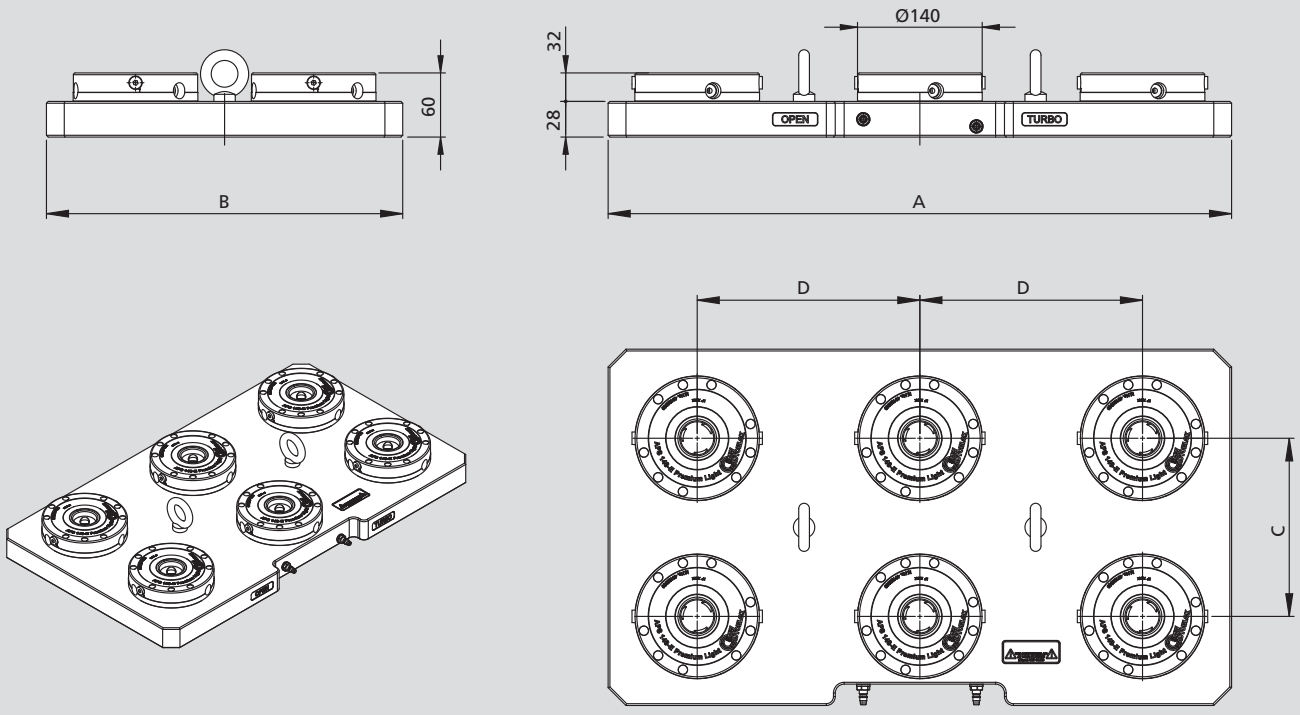

Subject to technical changes.

Special clamping units on request.

Order numbers

Type	Id. No.	A [mm]	B [mm]	C [mm]	D [mm]	Pull-in force with Turbo [kN]	Repeatability [mm]	Weight [kg]
Clamping unit with 6 APS 140 Premium Light	46168110	600	400	200	200	26*	< 0.005	83
Clamping unit with 6 APS 140 Basic	46168115	600	400	200	200	26*	< 0.005	84

* For each module.

Media feed 3 axis zero feedings
■ For plate with 2 APS 140 E

APS 140-E

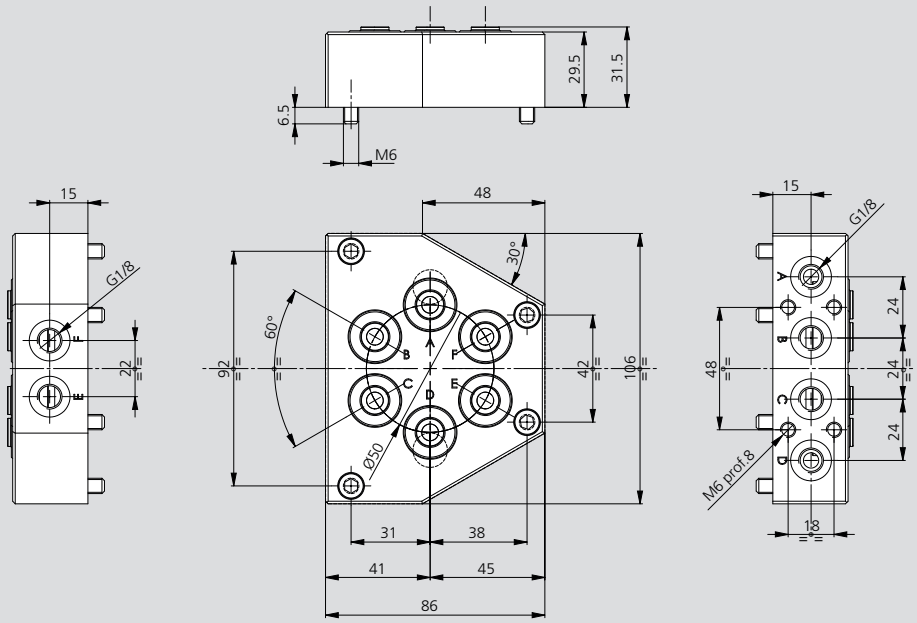

Subject to technical changes.

Example

460020
460021

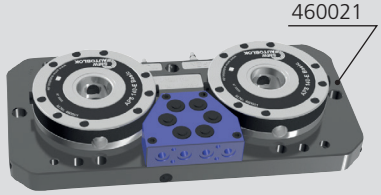

Media feed for plate with 2 APS 140	Id. No.	Possible feedings	Weight [kg]
KIT SUPP-2 INN PASCAL WVP-2FPL on plate with 2 APS 140 3 AXIS	46202040	A-D	1.6
KIT SUPP-4 INN PASCAL WVP-2FPL on plate with 2 APS 140 3 AXIS	46202032	A-B-C-D	1.6
KIT SUPP-6 INN PASCAL WVP-2FPL on plate with 2 APS 140 3 AXIS	46202033	A-B-C-D-E-F	1.6

Media feed 3 axis zero feedings
■ For plate with 4 APS 140E

APS 140-E

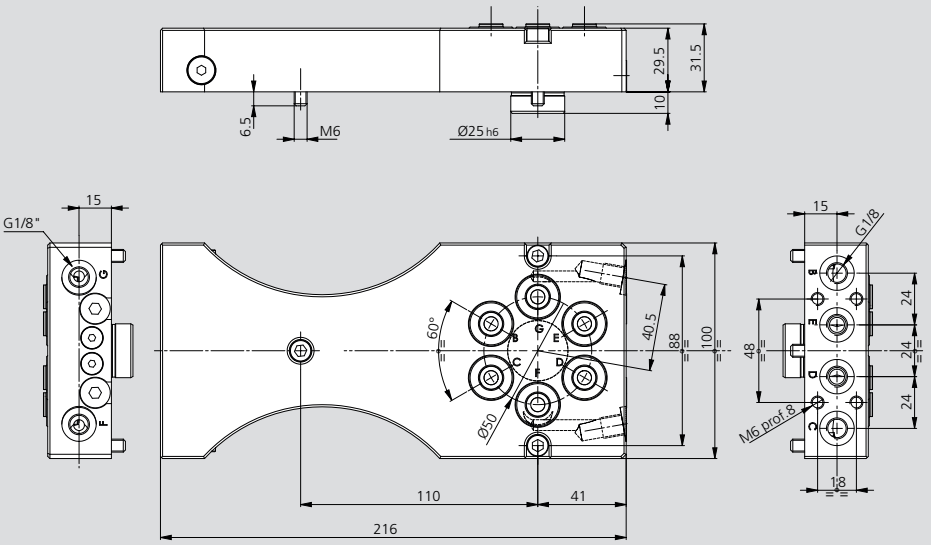

Subject to technical changes.

Example

460022
460023

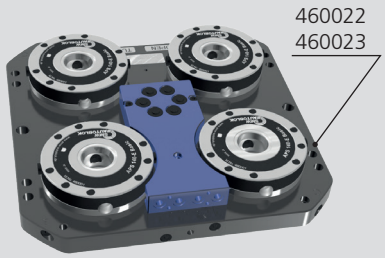

Media feed for plate with 4 APS 140	Id. No.	Possible feedings	Weight [kg]
KIT SUPP-2 INN PASCAL WVP-2FPL on plate with 4 APS 140 3 AXIS	46202039	B-C	3.8
KIT SUPP-4 INN PASCAL WVP-2FPL on plate with 4 APS 140 3 AXIS	46202028	B-C-D-E	3.8
KIT SUPP-6 INN PASCAL WVP-2FPL on plate with 4 APS 140 3 AXIS	46202029	B-C-D-E-F-G	3.8

APS 140

Module height extension

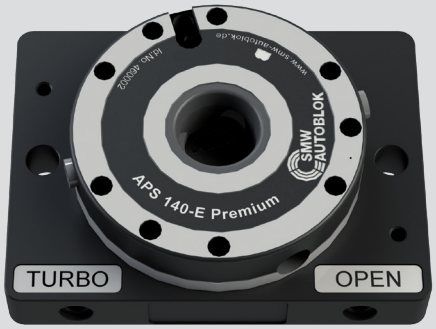

Application/customer benefits

- Pre-assembled clamping unit with 1 piece APS 140 Premium
- Universal applicable
- Fast and easy set-up

Technical features

- 3 clamping slides
- Repeatability < 0.005 mm
- Turbo function for increasing the pull-in forces (pull-in force without Turbo 7.5 kN)
- Anti rotating protection
- Air cleaning

Standard equipment

Clamping unit with 1 piece APS 140 Premium
Quick pneumatic connections

For clamping pallets please see page 56

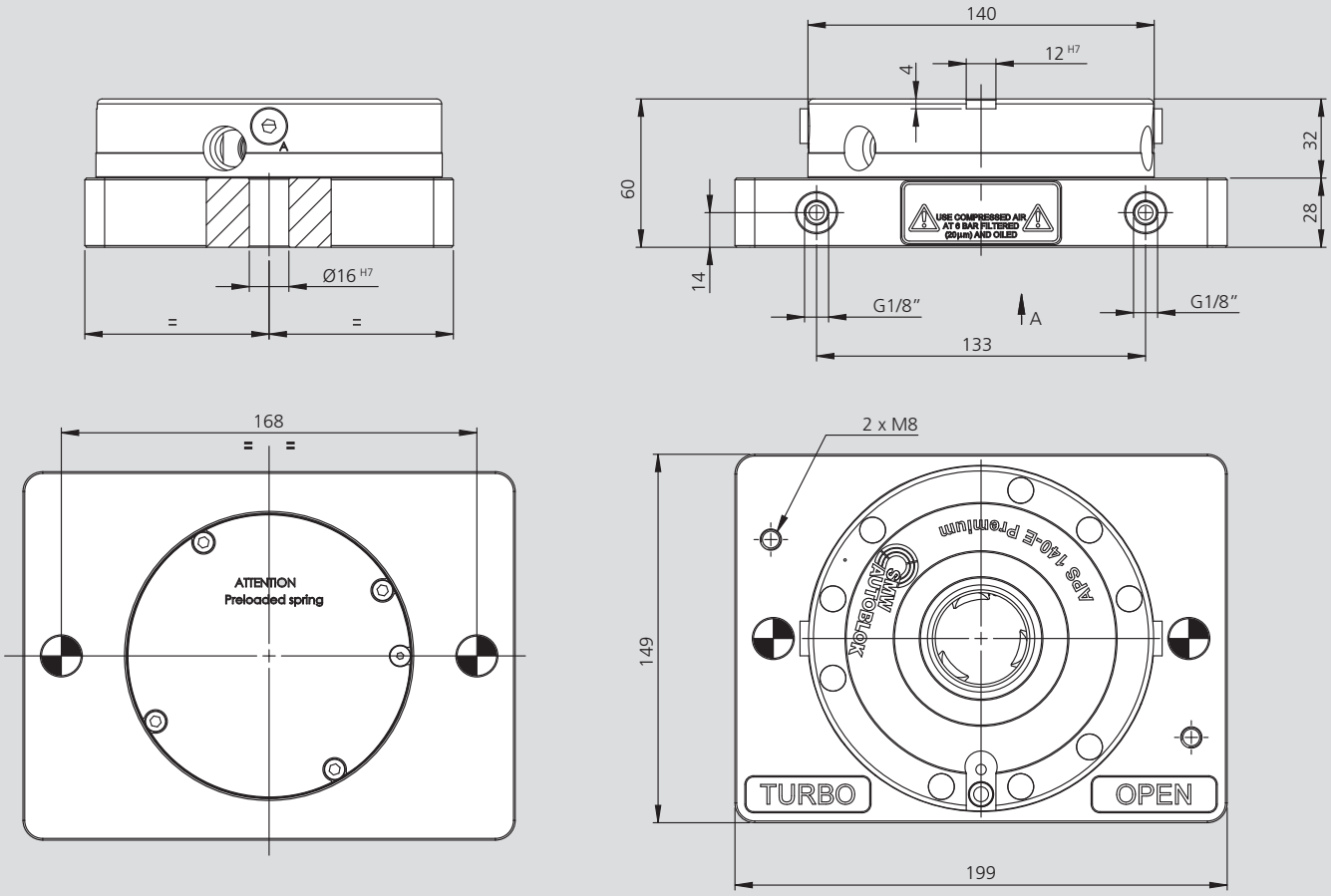

Subject to technical changes.

Order numbers

Module height extensions (APS included)	Id. No.	Height [mm]	Weight [kg]
Module extention with 1 APS 140 Premium	46168260	60	11

Module height extension with APS 140 E PREMIUM

APS 140

Application/customer benefits

- Pre-assembled module extension unit with 1 piece APS 100 Premium
- Universal applicable
- Fast and easy set-up

Technical features

- 2 clamping slides
- Repeatability < 0.005 mm
- Turbo function for increasing the pull-in forces (pull-in force without Turbo 4 kN)
- Anti rotating key-seat
- Air cleaning

Standard equipment

Module height extension with 1 piece APS 100 Premium

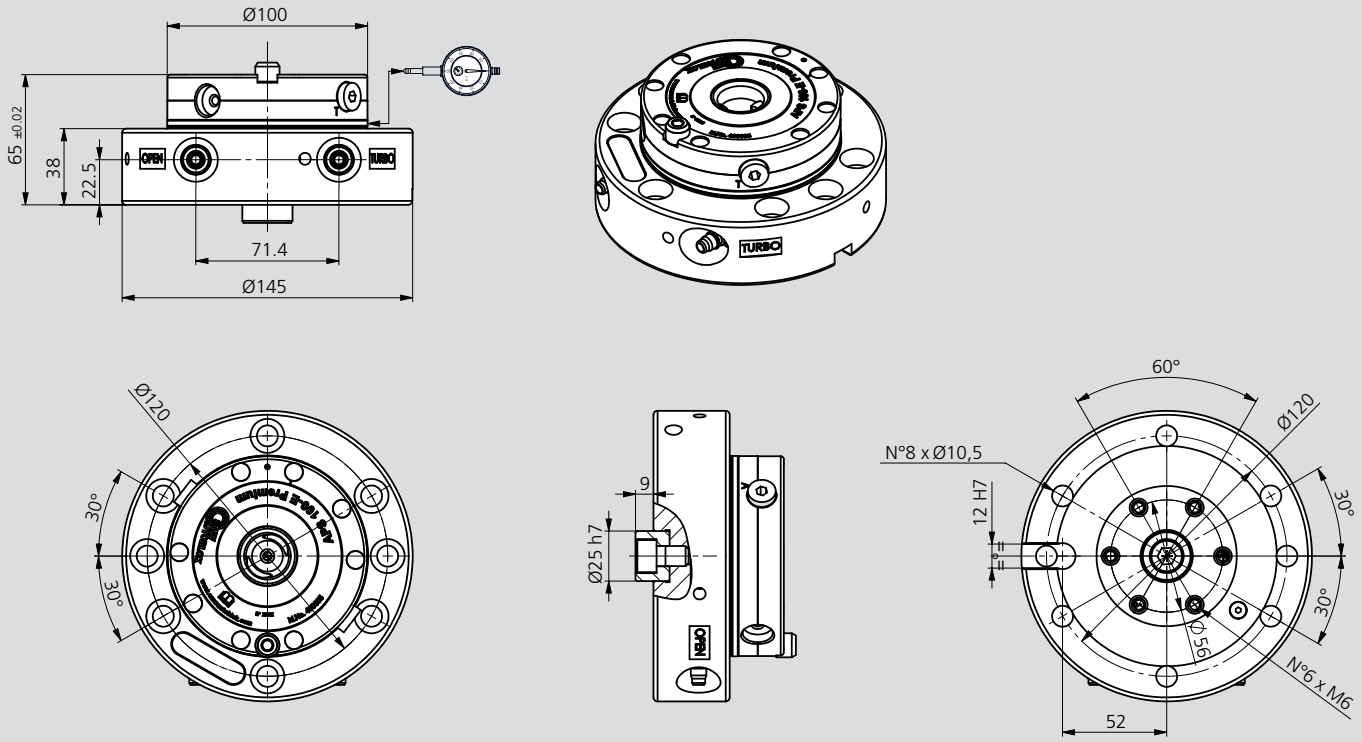

Subject to technical changes.

Order numbers

Module height extension (APS included)	Id. No.	Height [mm]	Weight [kg]
Module extension APS 100 Premium H65	460110	65	6

Note 1: For every unit the key (Id. No. 46162133) is included
Note 2: Optional T-nuts sets: 46204100 with T-slot 12 / 46204101 with T-slot 14 / 46204102 with T-slot 18. Drawings and shares of these sets.
Note 3: Mountable also on APS 140.
Note 4: When using the module in rotation (r.p.m. 200-1000) request balancing (listed separately).
Note 5: The module extension is equipped with radial screws for the fine centering of the APS.

APS 140

Module height extension with APS 140 E PREMIUM

Application/customer benefits

- Pre-assembled clamping unit with 1 piece APS 140 Premium
- Universal applicable
- Fast and easy set-up

Technical features

- 3 clamping slides
- Repeatability < 0.005 mm
- Turbo function for increasing the pull-in forces (pull-in force without Turbo 7.5 kN)
- Anti rotating protection
- Air cleaning

Standard equipment

Module height extension with 1 piece APS 140 Premium

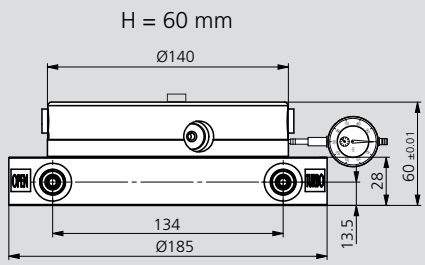

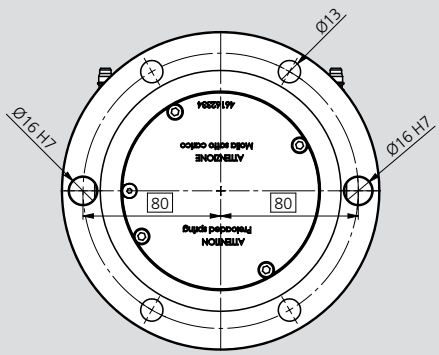

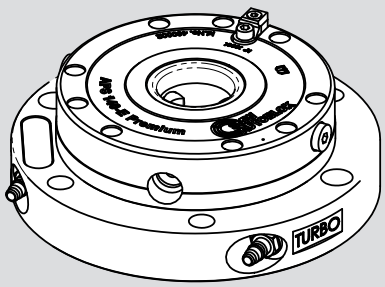

Subject to technical changes.

Order numbers

Module height extension (APS included)	Id. No.	Height [mm]	Weight [kg]
Module extension APS 140 Premium H60	460112	60	8

Note 1: For every unit the key (Id. No. 46162333) is included.
Note 2: For the pair of clamps please see accessories APS on page 65.

Module height extension for indexing tables

APS 140

Application/customer benefits

- Flange for indexing tables and CNC indexing tables with T-slots flange

Technical features

- 3 clamping slides
- Repeatability < 0.005 mm
- Turbo function for increasing the pull-in forces (pull-in force without Turbo 7.5 kN)
- Anti rotation key-seat
- Air sensing
- Air cleaning
- Fully sealed (proofline)

Standard equipment

Flange with 1 APS 140 modul for indexing tables
and for orientation on indexing tables with T-slots

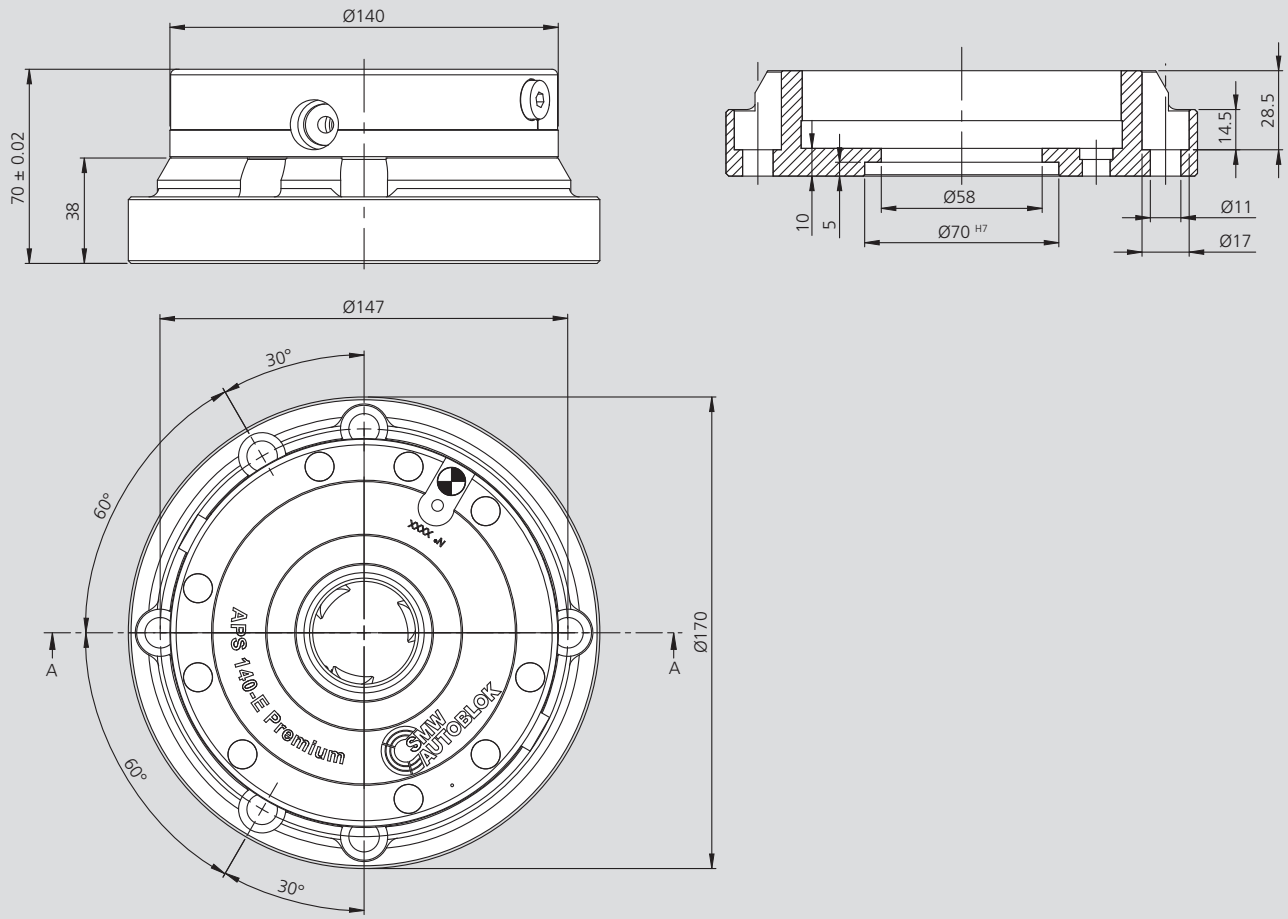

Subject to technical changes.

Order numbers

Module height extension (APS included)	Id. No.	Höhe [mm]	Gewicht [kg]
Module height extension	46167620	70	17

APS 140

Module height extension with APS 140 E PREMIUM

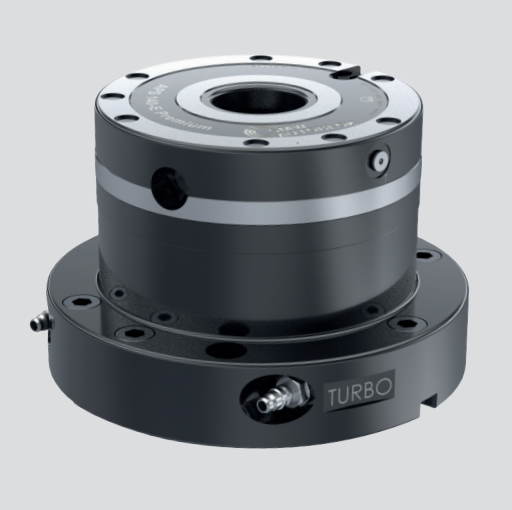

Application/customer benefits

- Pre-assembled module extension unit with 1 piece APS 140 Premium
- Universal applicable
- Fast and easy set-up

Technical features

- 3 clamping slides
- Repeatability < 0.005 mm
- Turbo function for increasing the pull-in forces (pull-in force without Turbo 7.5 kN)
- Anti rotating protection
- Air cleaning

Standard equipment

Module height extension with 1 piece APS 140 Premium

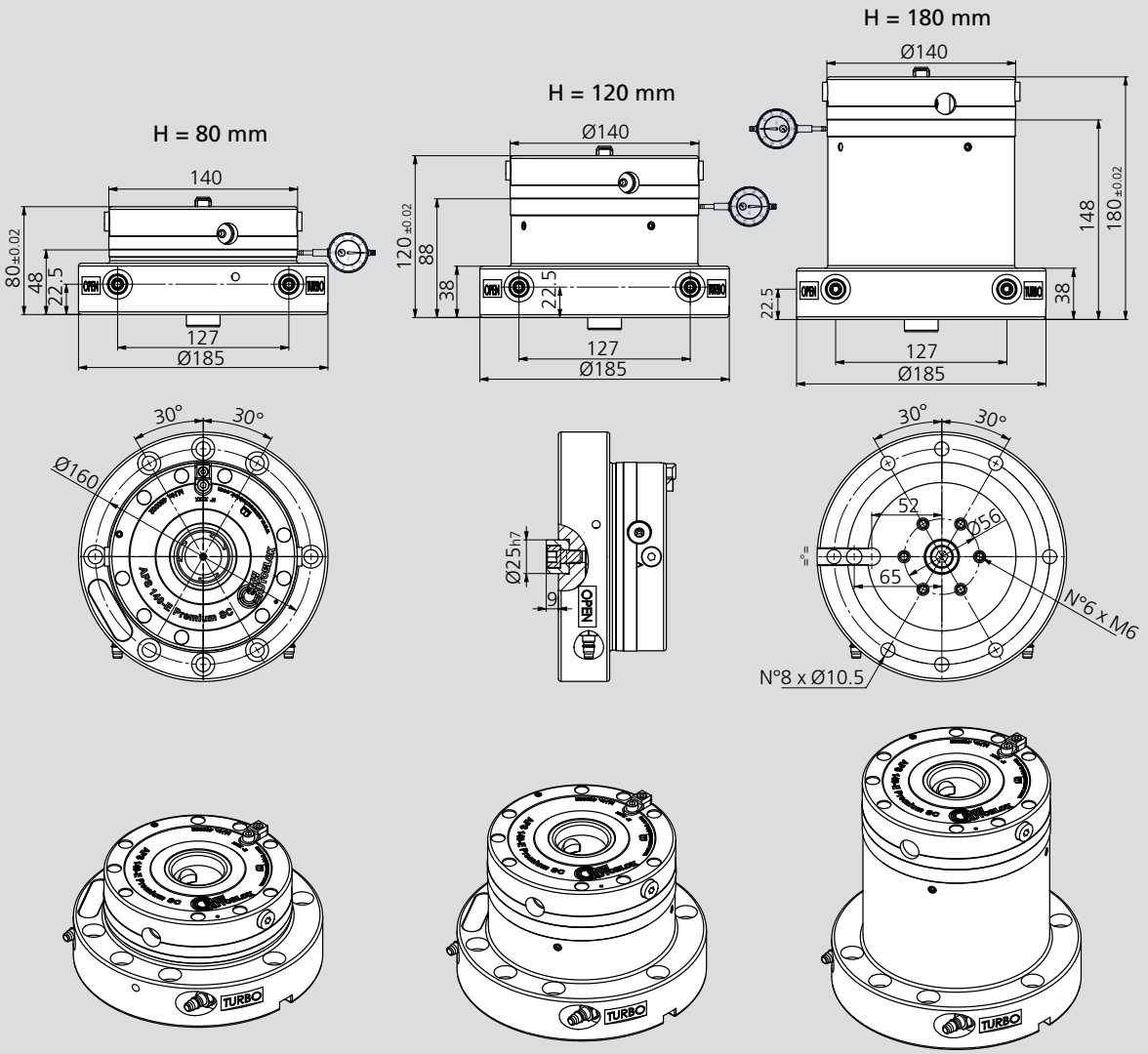

Subject to technical changes.

Module height extension (APS included)	Id. No.	Height [mm]	Weight [kg]
Module extension APS 140 Premium H80	460113	80	11
Module extension APS 140 Premium H120	460114	120	14
Module extension APS 140 Premium H180	460115	180	18

Note 1: For every unit the key (Id. No. 46162133) is included
Note 2: Optional T-nuts sets: 46204100 with T-slot 12 / 46204101 with T-slot 14 / 46204102 with T-slot 18. Drawings and shares of these sets.
Note 3: Mountable also on APS 190 and APS 140.
Note 4: When use the module in rotation (200-1000 r.p.m.) request balancing (listed separately).
Note 5: The module extension is equipped with radial screws for the fine centering of the APS.

Module height extension with APS 190 E PREMIUM

APS 190

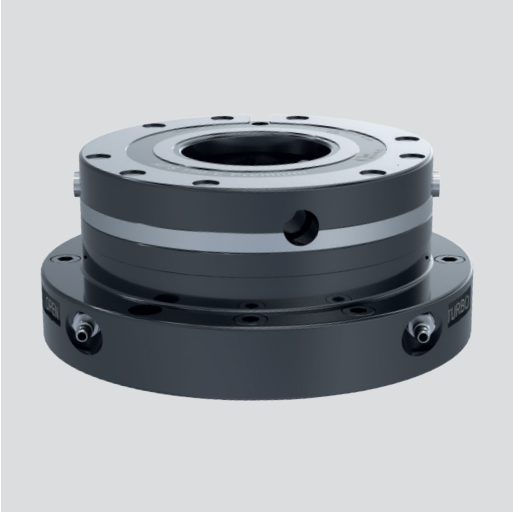

Application/customer benefits

- Pre-assembled module extension unit with 1 piece APS 190 Premium
- Universal applicable
- Fast and easy set-up

Technical features

- 3 clamping slides
- Repeatability < 0.005 mm
- Turbo function for increasing the pull-in forces (pull-in force without Turbo 7.5 kN)
- Anti rotating protection
- Air cleaning

Standard equipment

Module height extension with 1 piece APS 190 Premium

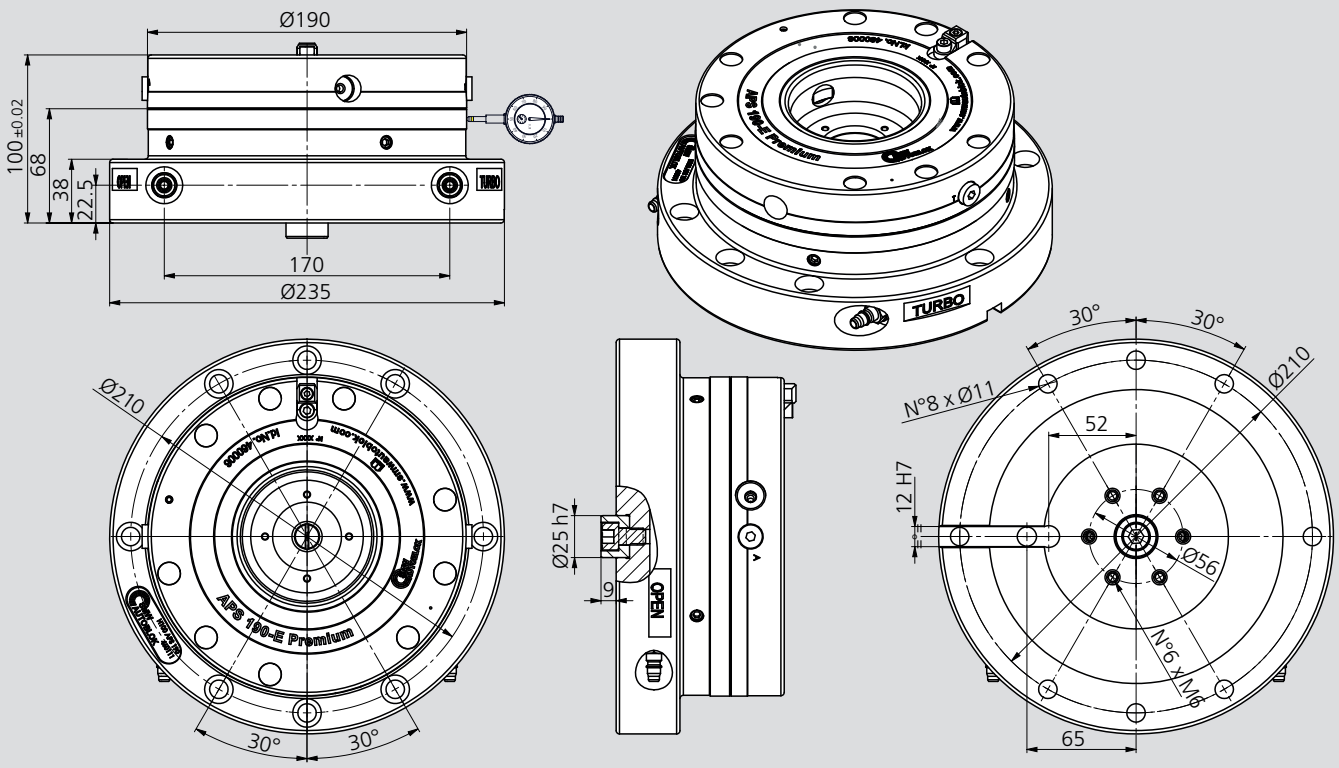

Subject to technical changes.

Order numbers

Module height extension (APS included)	Id. No.	Height [mm]	Weight [kg]
Module extension APS 190 PREMIUM H100	460111	100	20.5

Note 1: For every unit the key (Id. No. 46162133) is included
Note 2: Optional T-nuts sets: 46204100 with T-slot 12 / 46204101 with T-slot 14 / 46204102 with T-slot 18. Drawings and shares of these sets.
Note 3: Mountable also on APS 190 and APS 140.
Note 4: When use the module in rotation (200-1000 r.p.m.) request balancing (listed separately).
Note 5: The module extension is equipped with radial screws for the fine centering of the APS.

APS
Clamping units
for vertical turning lathes

Industry 4.0
Product

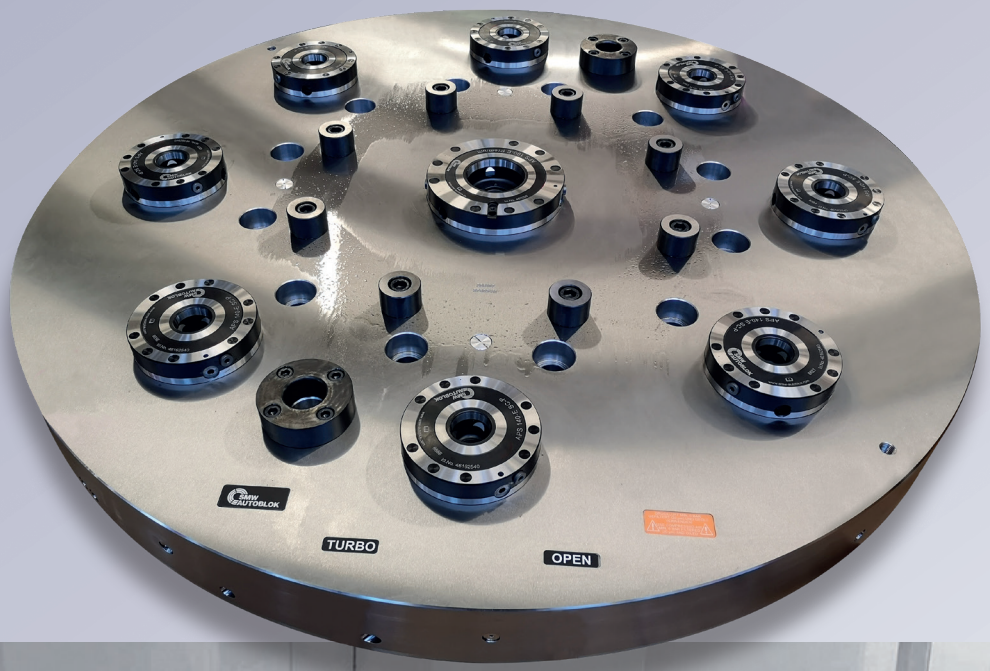

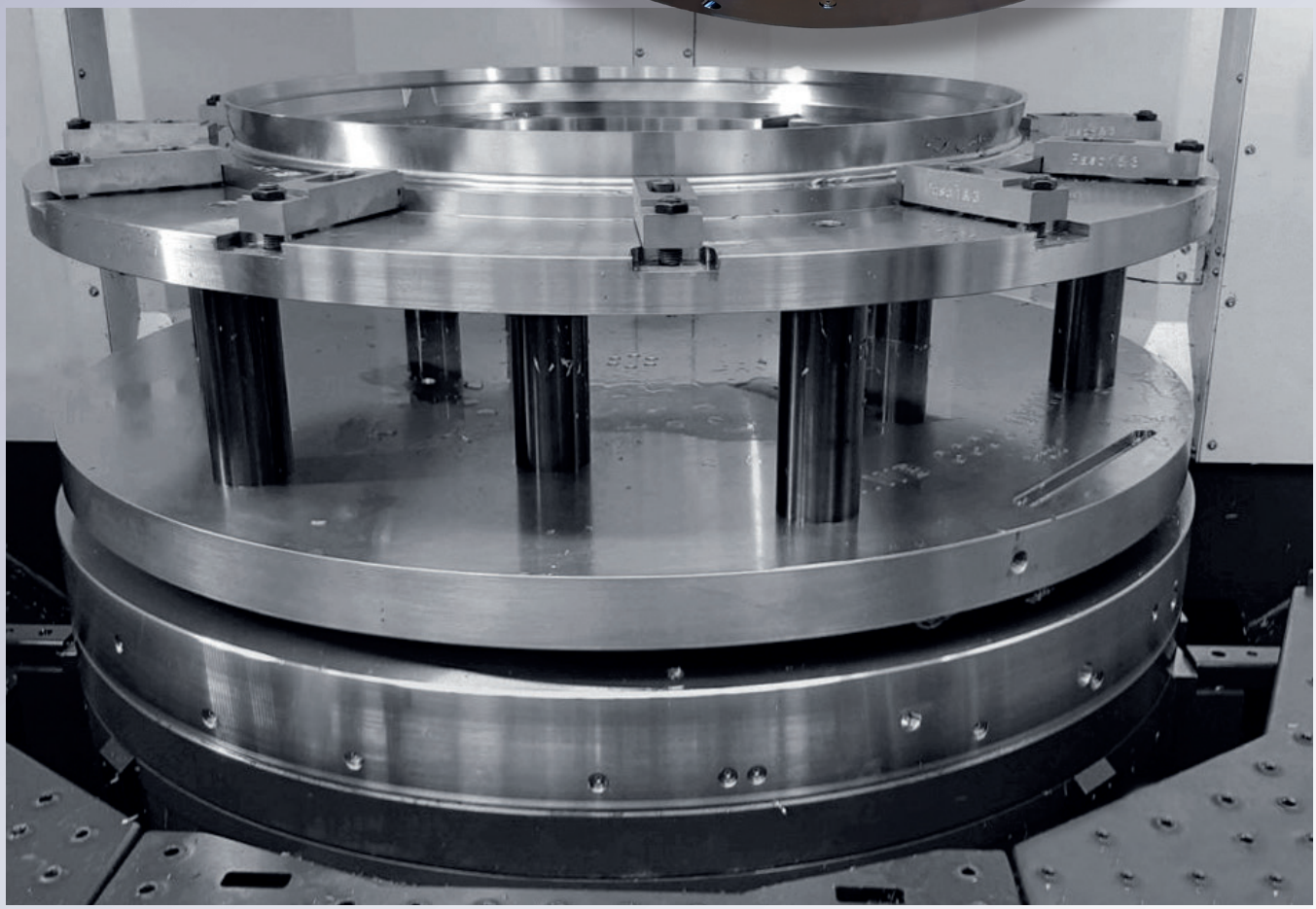

Clamping unit

■ For vertical turning lathes

APS 190 - 140

Application/customer benefits

- Pre-assembled clamping unit with APS 190 Premium and APS 140 Premium Light
- For vertical turning machining center
- Universal applicable with ASA flanges or directly on the spindle nose
- Fast and easy set-up

Technical features

- 3 clamping slides
- Repeatability < 0.005 mm
- Turbo function for increasing the pull-in forces (pull-in force without Turbo 13.5 kN for APS 190 and 7.5 kN for APS 140)
- Visual control for open and turbo
- Air cleaning

Standard equipment

Clamping unit with APS 190 Premium and APS 140 Premium Light
ASA flange not included

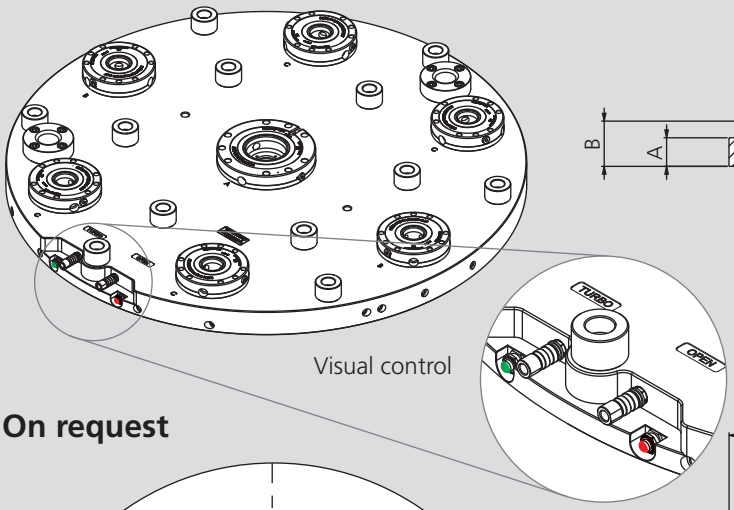

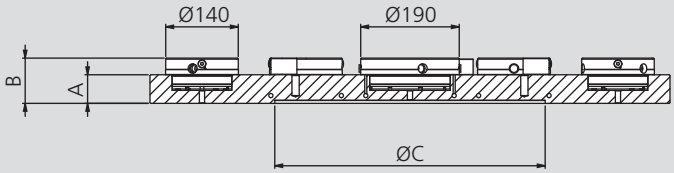

On request

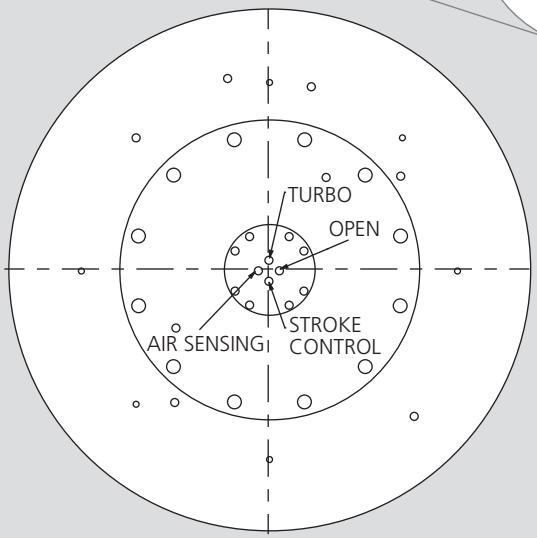

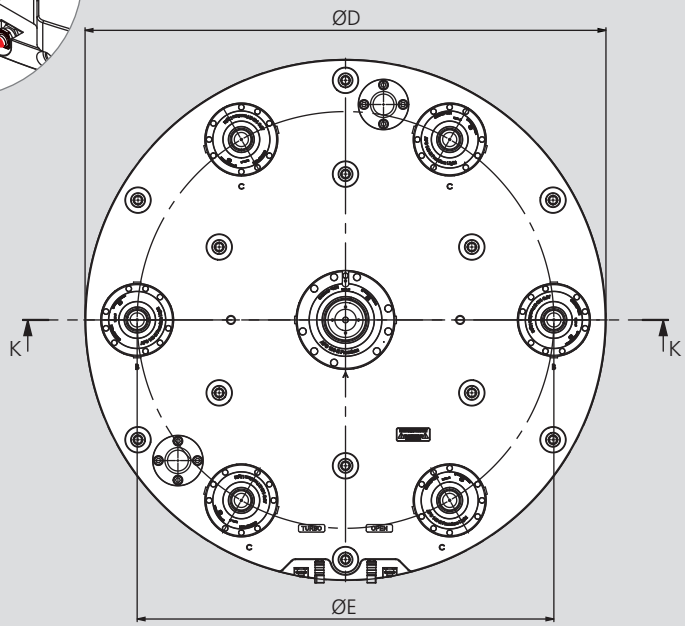

Subject to technical changes.

Type	Id. No.	Pull-in force with Turbo [kg]	Repeatability [mm]	Ø	A	B	C	D	E	APS 140 n°	APS 190 n°	Weight [kg]
Clamping unit with APS 190 Premium + APS 140 Premium light	on request	45 (APS 190) 26 (APS 140)	< 0.005	630	50	82	380	630	480	4	1	128
	on request		< 0.005	800	55	87	520	800	600	6	1	222
	on request		< 0.005	1000	55	87	520	1000	800	6	1	346
	on request		< 0.005	1200	60	92	720	1200	1000	8	1	519

APS 190 - 140

Top plate for clamping unit

Application/customer benefits
- Pre-assembled clamping pallet for APS turning plates
- Universal applicable
- Ready to use

Technical features
- Fully assembled
- Rust protected
- High quality steel (1.1730)

Standard equipment
1 clamping pallet: Fully assembled with 1 clamping pin (type A for APS 190), 2 clamping pin (type B for APS 140); 2 / 4 / 6 clamping pin (type C for APS 140), 2 male pre-centering pins

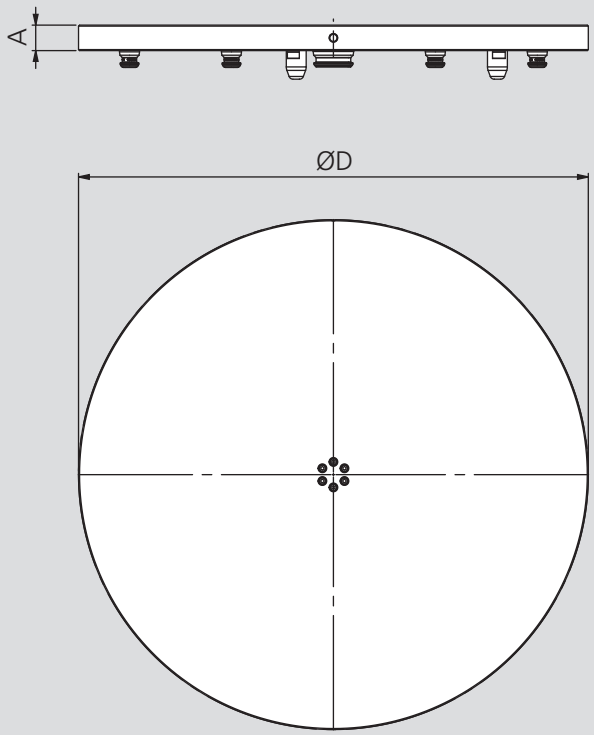

Subject to technical changes.

Application examples

Id. No.	Ø	A	Weight [kg]
on request	630	40	102
on request	800	40	163
on request	1000	50	316
on request	1200	50	455

Mounting flanges on short taper spindle noses

- Direct and indirect mounting
- Reduction and increase mounting

Chuck flanges

DIN 55026 / ISO-A 702/1

Application/customer benefits

- Flanges for short taper mount spindles (DIN 55026/ISO-A 702/1)
- Easy installation of chucks on the machine spindle

Flange FF 1 = Direct mounting
Flange FF 2 = Reduction of taper
Flange FF 3 = Increase of taper

Technical features

- Case hardened
- High precision grinding of the taper and all reference dimensions

Standard equipment

Fixing bolts of the indirect mounting flange on the spindle nose

Ordering example

Flange FF 2 A8 Id. No. 24185000

Type FF 1
ISO-A mounting direct

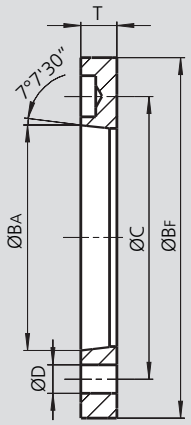

Type FF 2
ISO-A mounting reduction

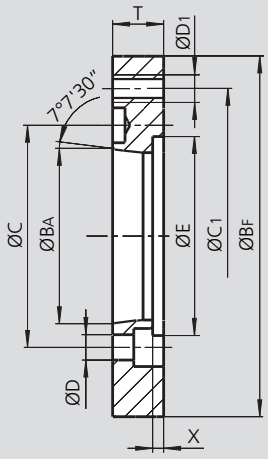

Type FF 3
ISO-A mounting increase

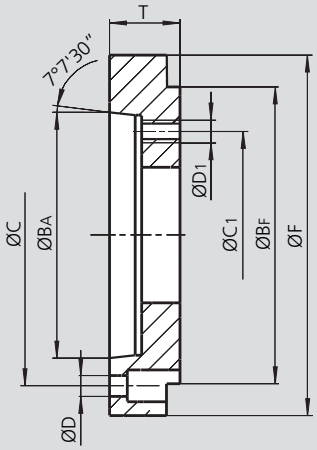

Subject to technical changes.

Flange type FF 1

Flange Id. No.	Spindle nose	BF [mm]	BA [mm]	C [mm]	D [mm]	T [mm]	Weight [kg]
24125000	**A15**	380	285.775	330.2	25	23	8
24127100*	**A15**	380	285.775	330.2	25	33	11.5
24178000	**A20**	520	412.775	463.6	27	25	14.5

* **Suggestion:** This flange is thicker than the standard one, to be used only if necessary!

Flange type FF 2

Flange Id. No.	Spindle nose	BF [mm]	BA [mm]	C [mm]	D [mm]	C1 [mm]	D1 [mm]	E [mm]	X [mm]	T [mm]	Weight [kg]
24185000	**A8**	380	139.719	171.4	17	330.2	M24	197	10	40	24
24115000	**A11**	380	196.869	235	21	330.2	M24	197	10	40	21
24116100	**A11**	520	196.869	235	21	463.6	M24	267	12	45	54
24126100	**A15**	520	285.775	330.2	25	463.6	M24	-	-	40	40
24179400	**A20**	720	412.775	463.6	27	647.6	M30	-	-	50	93

Flange type FF 3

Flange Id. No.	Spindle nose	BF [mm]	BA [mm]	C [mm]	D [mm]	C1 [mm]	D1 [mm]	F [mm]	T [mm]	Weight [kg]
24175000	**A20**	380	412.777	463.6	27	330.2	M24	520	58	55

APS
Clamping units
Customized solutions for automation

Industry 4.0 product

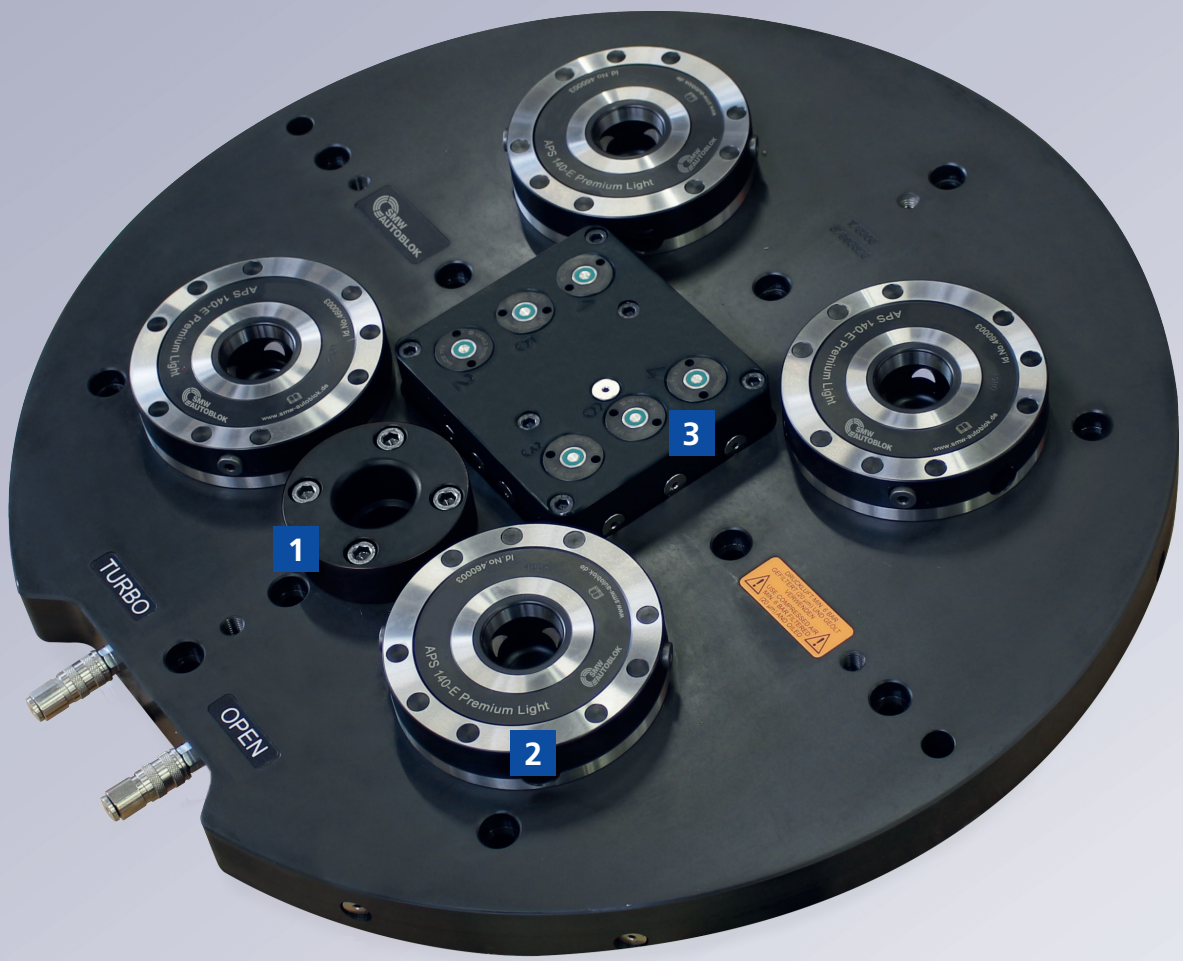

Functional overview of the APS clamping units

1	Pre-centering
2	APS zero point clamping module
3	Distribution plate for media feed (pneumatic / hydraulic) 6 channel

Application examples

Solution 1

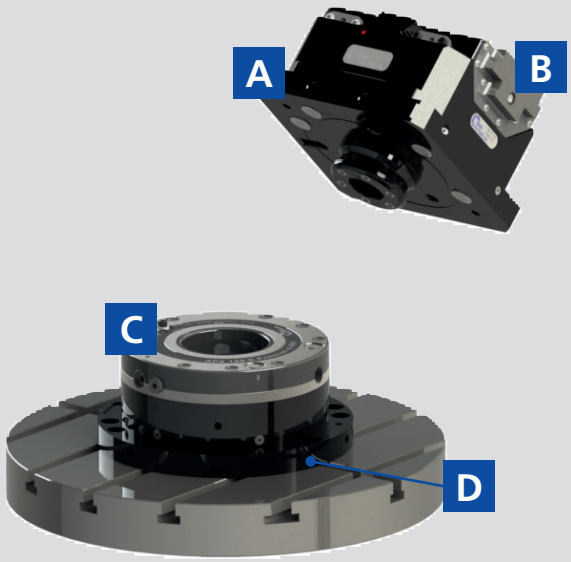

Id. No.	Solution 1	Solution 2	Solution 3
A	46200103	46201111	46201111
B	77904418	77904418	77904418
C	46162640	46202028	46202024
D	46203000	460022	46202000

Solution 2

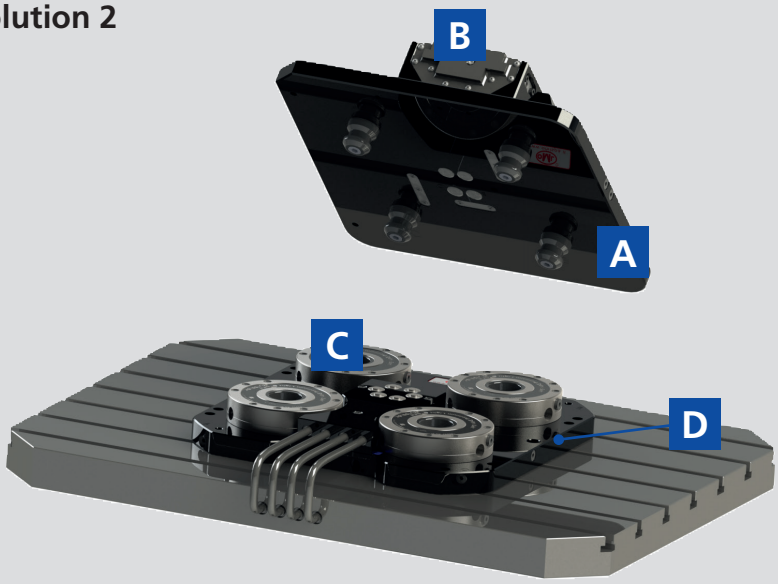

Solution 3

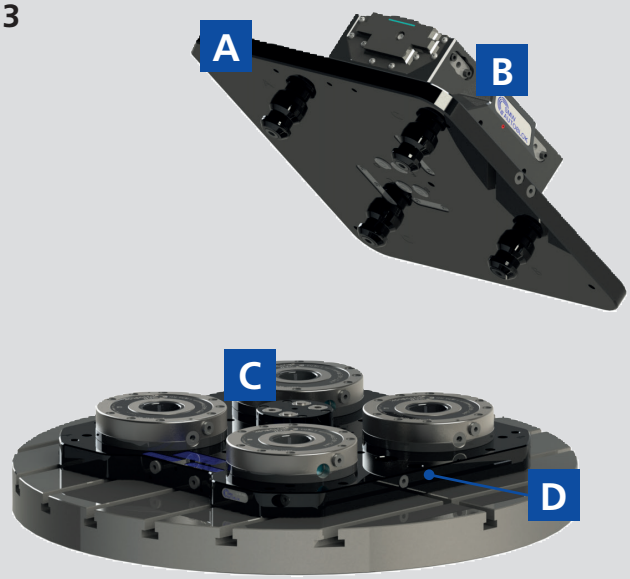

Hydraulic power chuck

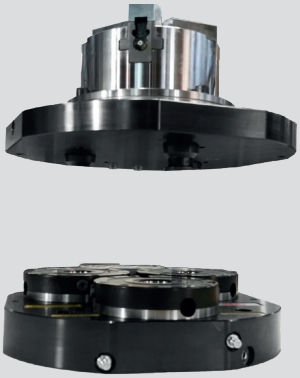

APS Clamping units for automation

Possible configuration scheme for 5-axis machines 2-3-4 feedings

Industry 4.0 Product

For more detailed information please ask our SMW-AUTOBLOK experts.

2 Feedings - for 5-axis machines

2 feedings cover

Id. No. 46202008 std. equipment with plate Id. No. 46202000

4 feedings media feed 5-axis

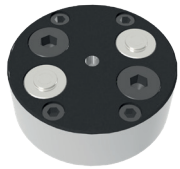

Id. No. 46202025

6 feedings media feed 5-axis

Id. No. 46202024

1 Plate with 4 APS 140

with central distributor

Prepared for 6 feedings Id. No. 46202000

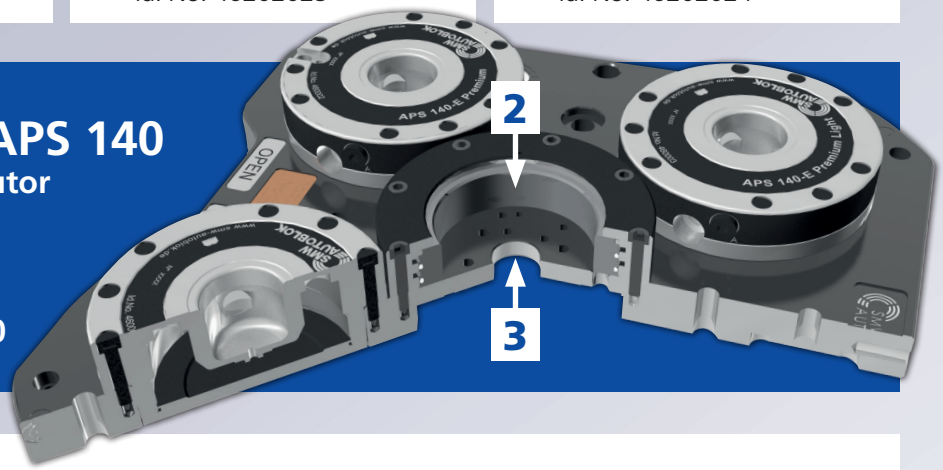

3 Distributor

To be designed specifically for each machine until to 6 feedings (must be definied in case of order).

2 feedings

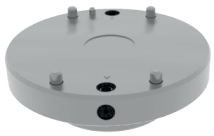

4 feedings

6 feedings

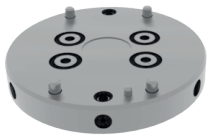

4 T-nuts set

Optional

Order guide: Plate with 4 140 APS to order pos. **1+2+3+4**

1. Plate group with n.4 APS 140 Id. No. 46202000 (n.4 140 APS supplied).
2. Media feed.
3. Distributor.
4. T-nuts set.

Order examples:
n.1 46202000 + n.1 distributor + n.1 support + n.1 T-nuts set.

Clamping unit for automation 5-axis 2-4-6 feedings

4 APS 140-E

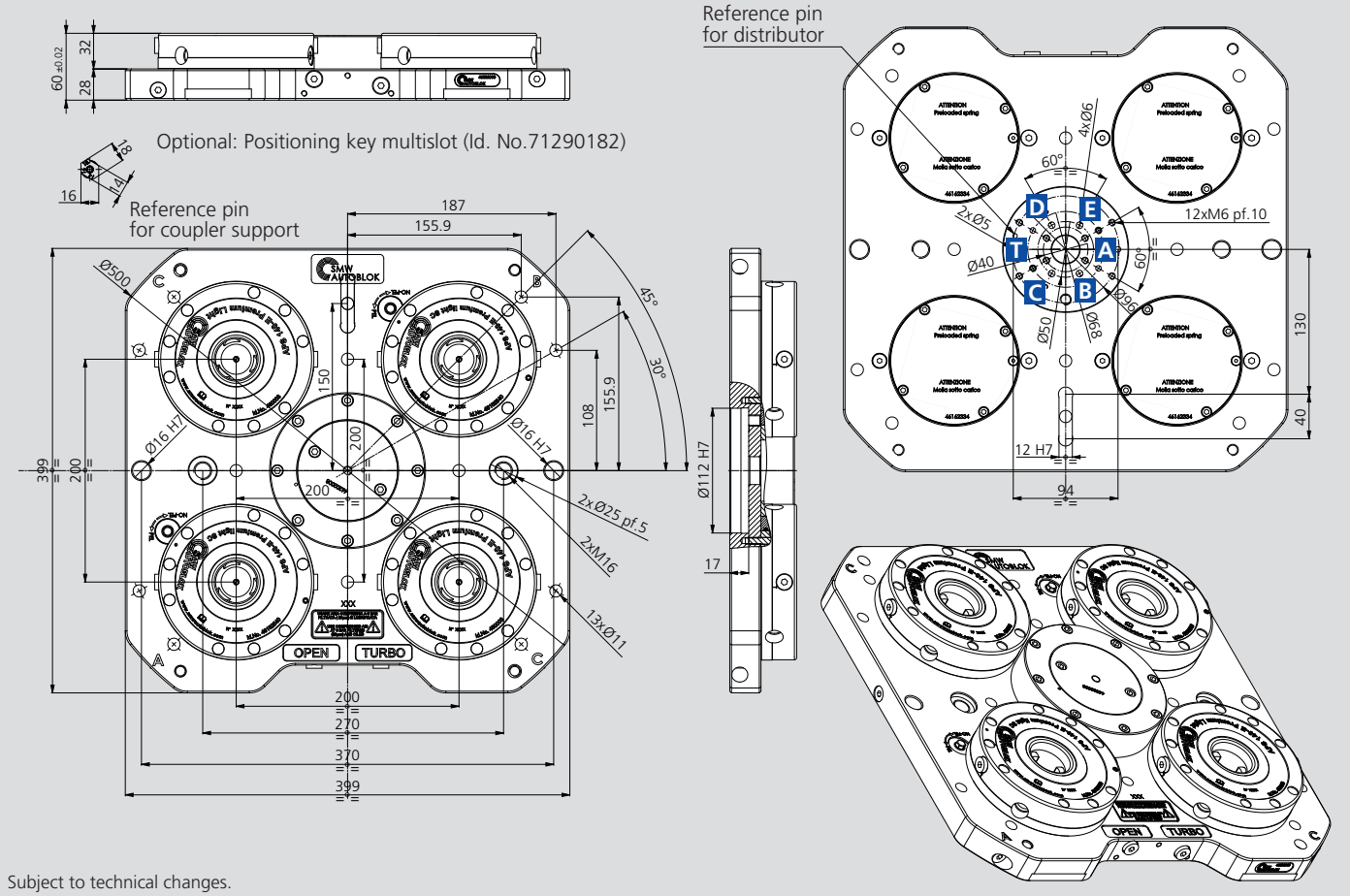

Subject to technical changes.

Plate (APS included)	Id. No.	Weight [kg]
Plate 4 APS 140 E PREMIUM for 5-axis	46202000	43

A APS open **T** Air sensing / Turbo APS

The feedings **B C D E** are transferred on the pallet between pneumatic and hydraulic couplers put on the body of the APS (Id. No. 46202024 or 46202025). If there are one or more of the Twin Vise models STV or PT mounted on the pallet, the feedings can be used in these different ways:

B Twin Vise open **C** Twin Vise closed **D** Stroke control valve Twin Vise

E Air sensing Twin Vise

* **Note 1:** Can be used the air sensing on the plate for the 5 axis using the TURBO feeding.
****Note 2:** When air sensing is not used, it can be excluded between two selectors present on the plate face.

Media feed 5-axis 2-4-6 feedings

4 APS 140-E

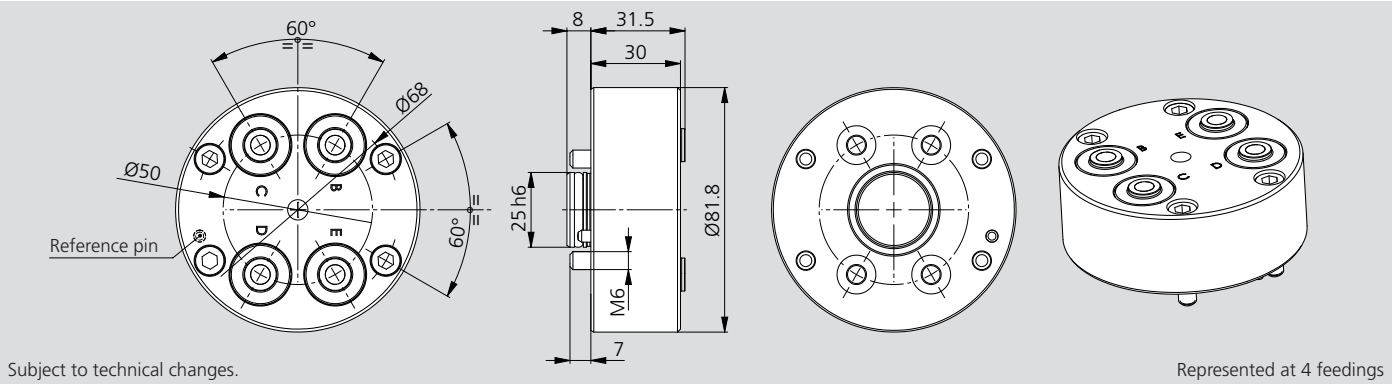

Subject to technical changes.

Represented at 4 feedings

Media feed 4 APS 140 5-axis	Id. No.	Possible feedings
Kit SUPP-4 INN PASCAL WVP-2FPL on plate 4 APS-140 5-axis	46202024	B-C-D-E
Kit SUPP-2 INN PASCAL WVP-2FPL on plate 4 APS-140 5-axis	46202025	B-C

APS
Module height extension for automation

Possible configurations scheme for 5-axis machines 2-4-6 feedings

Industry 4.0 Product

For more detailed information please ask our SMW-AUTOBLOK experts.

2 APS 190

▶ **2 feedings configuration**

APS 190 E PREMIUM
46165640

▶ **4 feedings configuration**

APS 190 2 INN
46162630

▶ **6 feedings configuration**

APS 190 4 INN
46162640

1 Module height extension group

▶ **Prepared for 6 feedings**
Id. No. 46203000

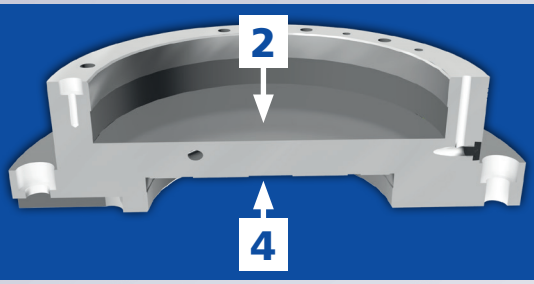

3 Key*

4 Distributor (example)

▶ **To be designed specifically for each machine until to 6 feedings (must be definied in case of order).**

▶ **2 feedings**

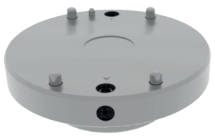

▶ **4 feedings**

▶ **6 feedings**

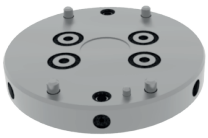

5 T-nuts set

Optional

Order guide: APS with 1 key to order positions **1-5:**
1. Module height extension group Id. No. 46203000
2. 190 APS with single key
3. to order key Id. No. 46162333
4. Distributor
5. T-nuts set

Order example: 1 pc. 46203000 + 1 pc. 46165640 + 1 pc. 46162333 + 1 pc. personalized distributor + 1 T-nuts set.

Module height extension one APS prepared for 5-axis machines until 6 feedings

For automation

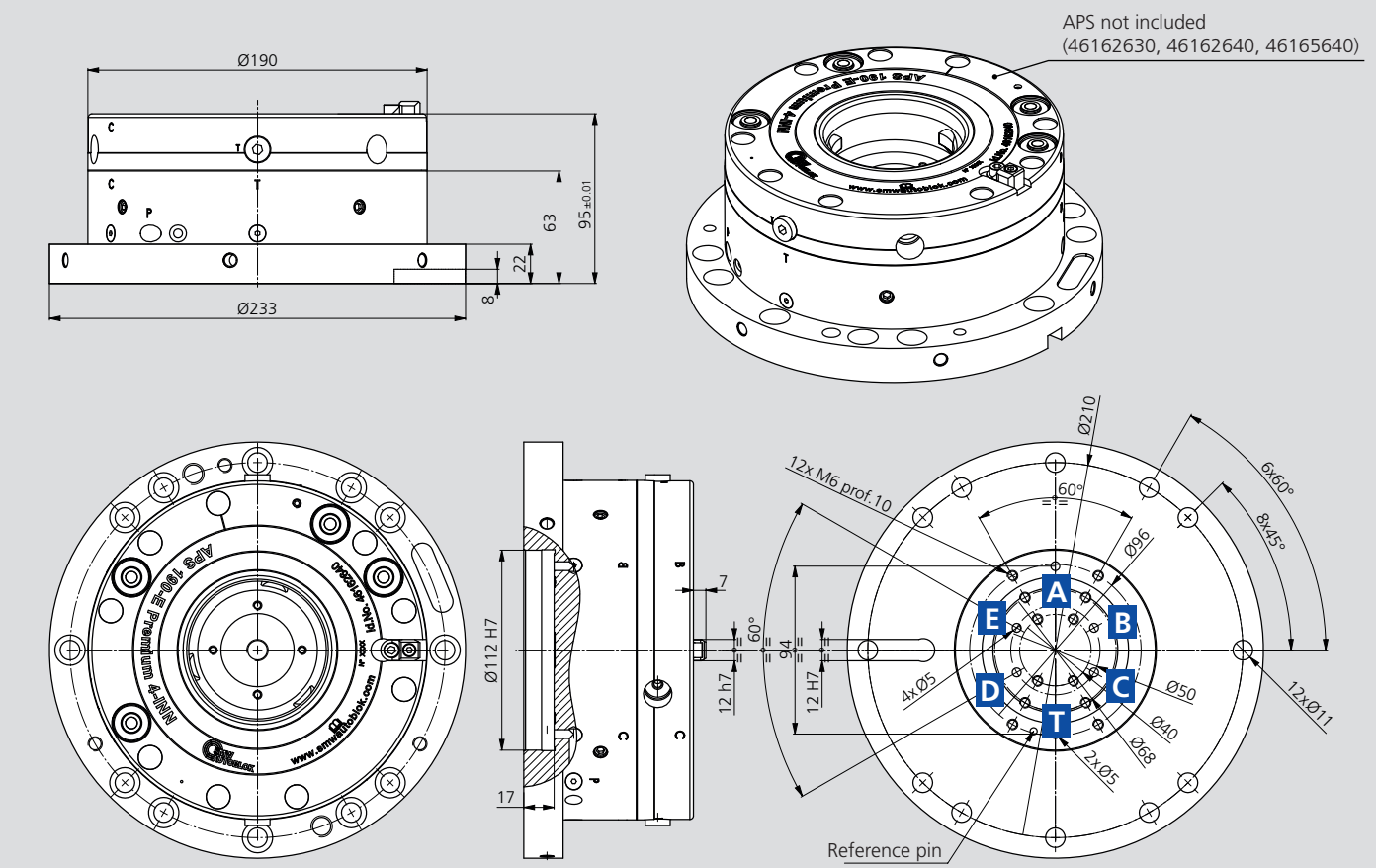

Subject to technical changes.

Module height extension (APS not included)	Id. No.	Height [mm]	Weight [kg]
Module height extension group N.6 feedings H95	46203000	95	10.5

A APS open

T Air sensing / Turbo APS

The feedings **B** **C** **D** **E** are used on the pallet between pneumatics and hydraulics couplers put on the body of 190 APS (Id. No. 46162630 and 46162640). When on the pallet is mounted a Twin vise model STV or PT the feedings can be used in these different ways:

B Twin Vise open

C Twin Vise closed

D Stroke control valve Twin Vise

E Air sensing Twin vise or Driver pin stroke control APS

The feeding **E** can not to be used on the pallet with the pneumatic / hydraulic coupler but can be used in another way to oversee the pneumatic stroke control of the APS 190; in this case the feeding is called **SC.**

180 STV

Pallet holder with 2 - 4 feedings

■ **Prepared for robot loading**

The pallet is prepared for loading with robots.

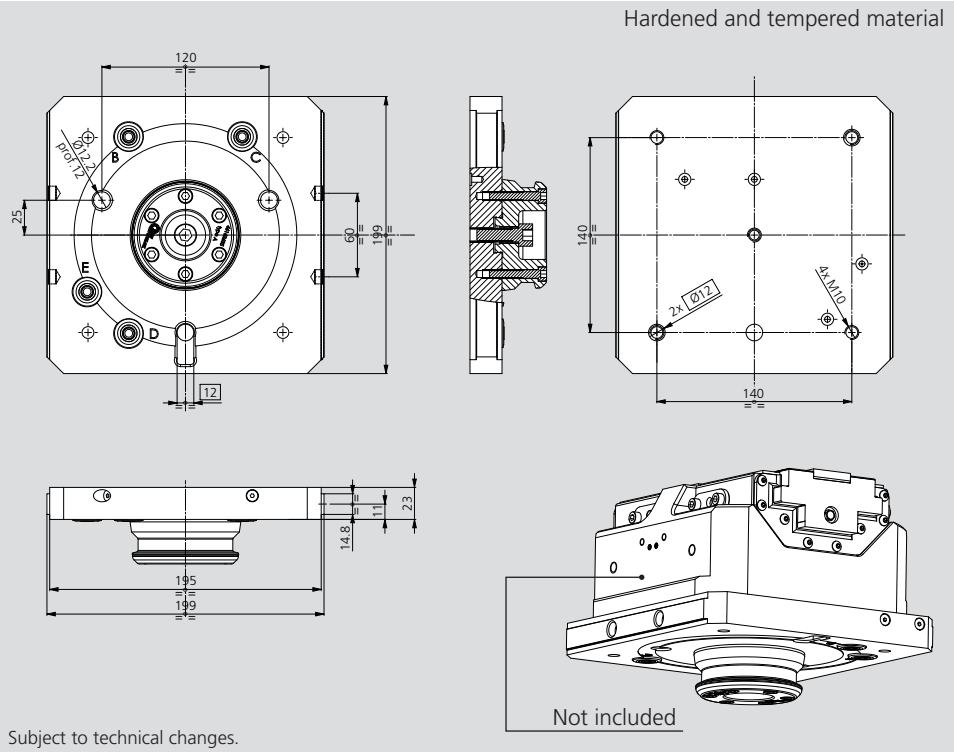

Type pallet (without vise)	Id. No.	Feedings to be used	Weight [kg]
Pallet holder 180STV 2-3GR with 4 feedings APS 190 loading robot	46200101	B-C-D-E	7.7
Pallet holder 180STV 2-3GR with 2 feedings APS 190 loading robot	46200103	B-C	7.7

225 STV

Pallet holder with 2 - 4 feedings

■ **Prepared for robot loading**

The pallet is prepared for loading with robots.

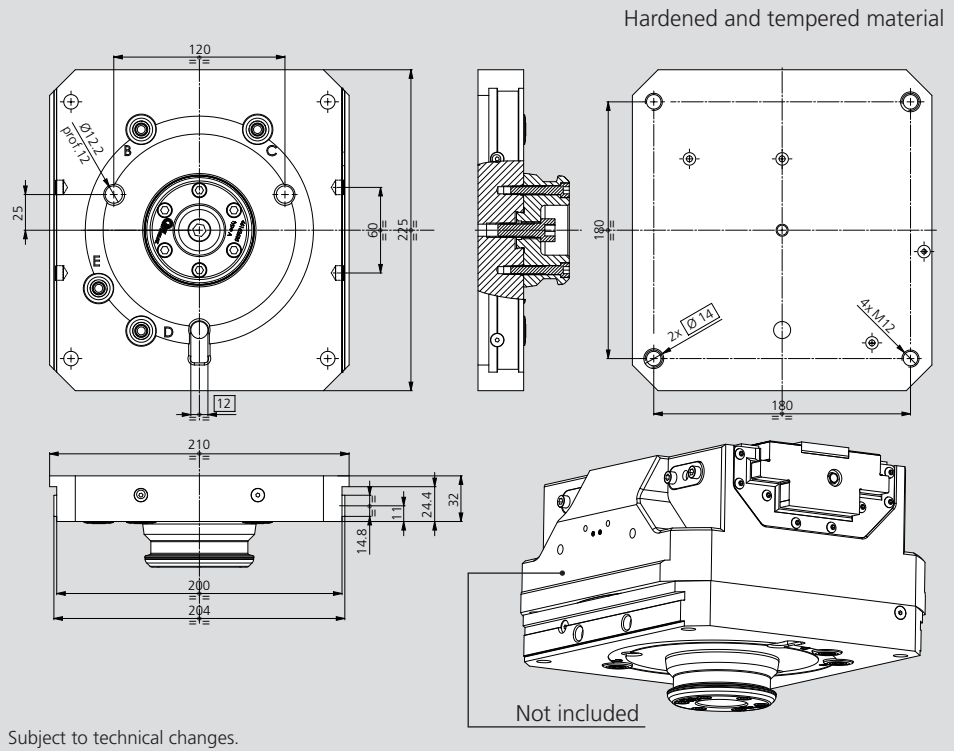

Type pallet (without vise)	Id. No.	Feedings to be used	Weight [kg]
Pallet holder 225STV 2-3GR with 4 feedings APS 190 loading robot	46200106	B-C-D-E	12
Pallet holder 225STV 2-3GR with 2 feedings APS 190 loading robot	46200108	B-C	12

The pallet is prepared for handling with robots.

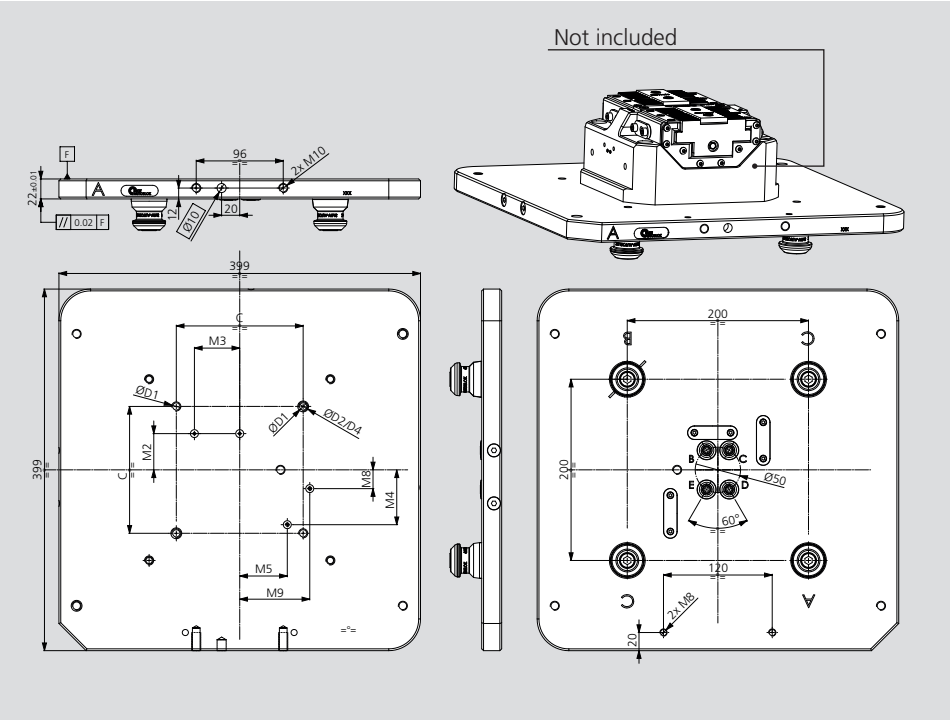

Subject to technical changes.

Type pallet (without vise)	Id. No.	Weight [kg]
Pallet Q400 prepared for 180 STV with feedings loading robot	46201111	28
Pallet Q400 prepared for 225 STV with feedings loading robot	46201101	28

APS 100

Combi unit

Application/customer benefits

- Pre-assembled clamping unit with 2 pieces APS 100 Premium
- Universal applicable
- Fast and easy set-up

Technical features

- 2 clamping slides
- Repeatability < 0.005 mm
- Turbo function for increasing the pull-in forces up to 15 kN (pull-in force without Turbo 4 kN)
- Anti rotating protection
- Air cleaning

Standard equipment

Combi unit with 2 pieces APS 100 Premium

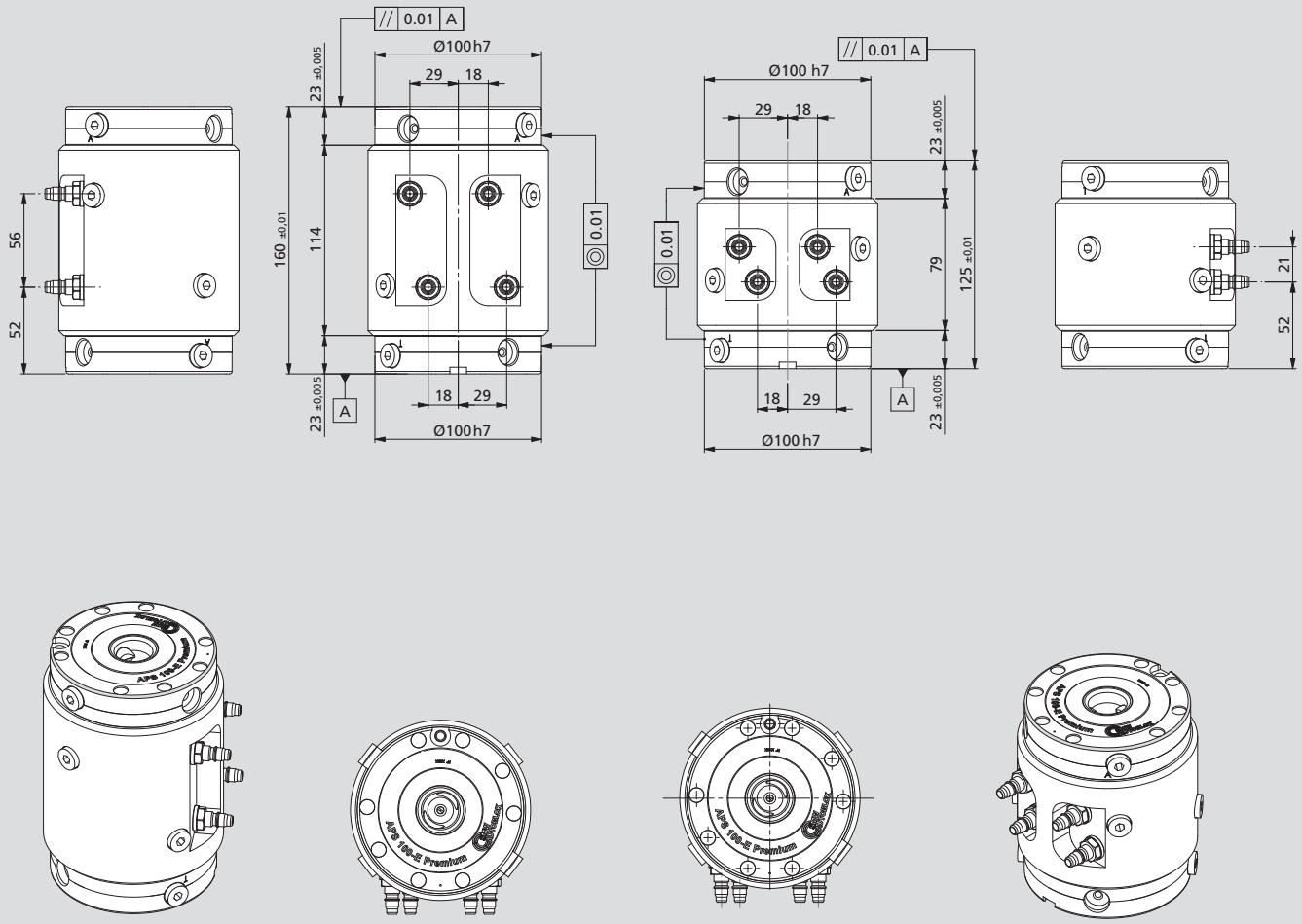

Subject to technical changes.

Order numbers

Type	Id. No.	Height [mm]	Weight [kg]
Combi unit with 2 pieces APS 100 Premium	460117	125	7
Combi unit with 2 pieces APS 100 Premium	460118	160	9

APS 140

Application/customer benefits

- Pre-assembled clamping unit with 2 pieces APS 140 Premium
- Universal applicable
- Fast and easy set-up

Technical features

- 3 clamping slides
- Repeatability < 0.005 mm
- Turbo function for increasing the pull-in forces up to 26 kN (pull-in force without Turbo 7.5 kN)
- Air cleaning
- Anti rotation protection

Standard equipment

Clamping unit with 2 pieces APS 140 Premium

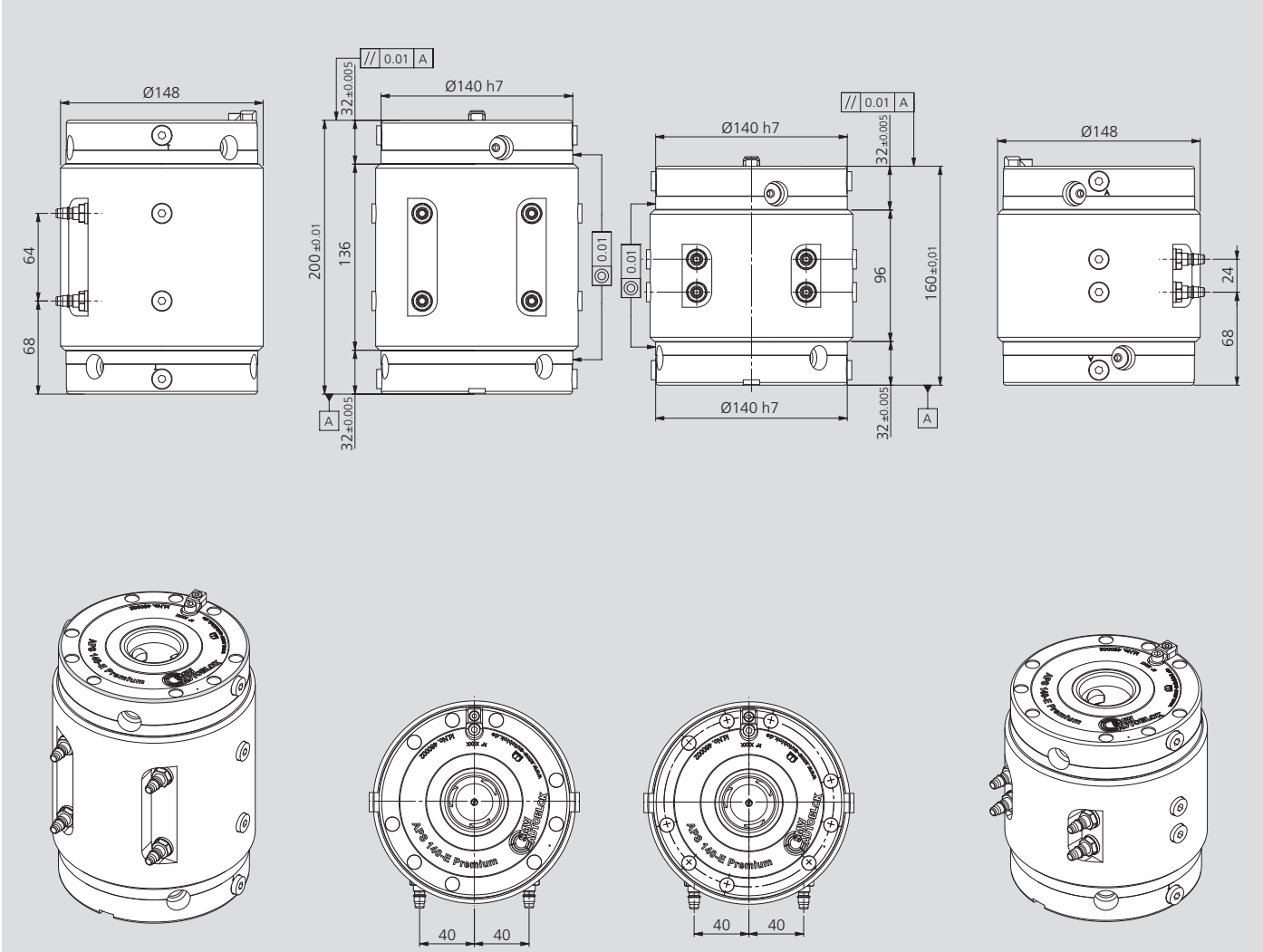

Subject to technical changes.

Order numbers

Type	Id. No.	Height [mm]	Weight [kg]
Combi unit with 2 pieces APS 140 Premium	460119	160	17
Combi unit with 2 pieces APS 140 Premium	460120	200	21

APS 100 / 140

Standard clamping pallets

Application/customer benefits

- Pre-assembled clamping pallet for APS 100 / 140
- Universal applicable
- Ready to use

Technical features

- Fully assembled
- Rust protected
- High quality steel (1.1730)

Standard equipment

1 clamping pallet: Fully assembled with 1 clamping pin (Type A), anti rotation key and hand grips
2 clamping pallet: Fully assembled with 1 clamping pin (Type A) and 1 clamping pin (Type B)
4 clamping pallet: Fully assembled with 1 clamping pin (Type A), 1 clamping pin (Type B), 2 clamping pin (Type C)

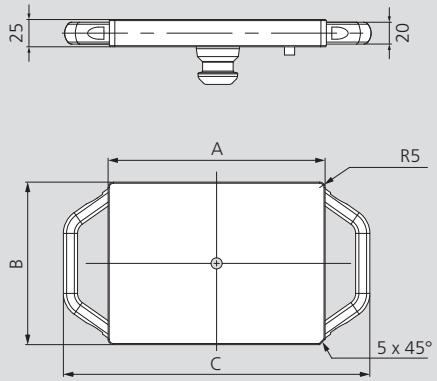

Subject to technical changes.

Type	Id. No.	A mm	B mm	C mm
Clamping pallet APS 100	46167721	149	149	231
Clamping pallet APS 140	46167722	199	149	281

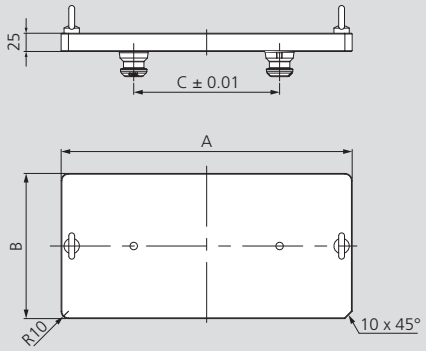

Subject to technical changes.

Type	Id. No.	A mm	B mm	C mm
Clamping pallet APS 100	46167723	299	149	150
Clamping pallet APS 140	46167724	399	199	200

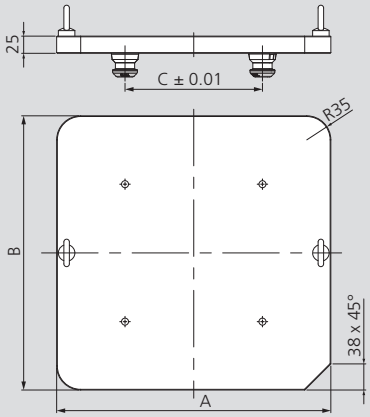

Subject to technical changes.

Type	Id. No.	A mm	B mm	C mm
Clamping pallet APS 100	46167725	299	299	150
Clamping pallet APS 140	46167726	399	399	200

Customer request data

- required for the preparation of the offer
- Simply fill in and send to:
  contact@stationary-workholding.com

APS

Application/customer benefits

- Customized clamping pallets
- Short delivery times
- Usable for any machine or application
- Rust protected by means of burnishing

Technical features

- High quality steel (1.1730)

Standard equipment

Customized clamping pallet with transport screws
Fully assembled with APS clamping pins on request

Customized clamping pallets

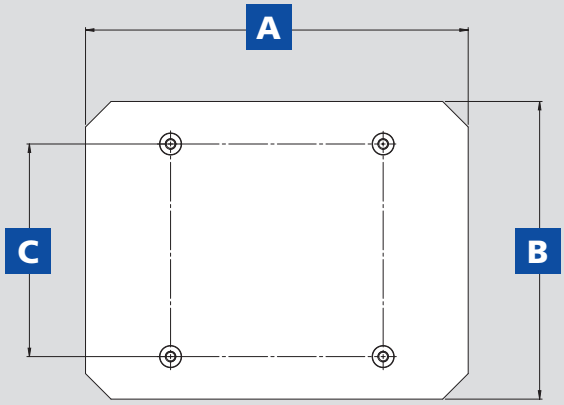

Dimensions	
A	
B	
C	

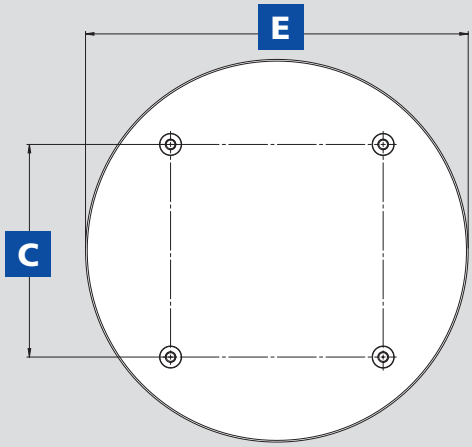

Dimensions	
C	
ØE	

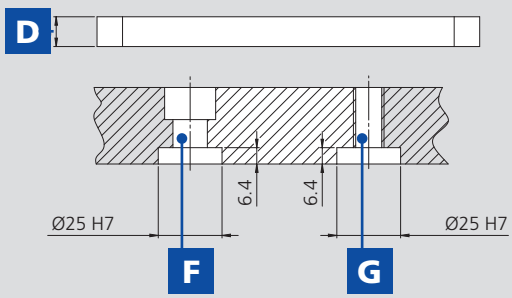

Dimensions		
D		
F	☐ M12	☐ M16
G	☐ M10	☐ M12

APS 140

High quality clamping pallet

■ Basic
■ Premium

Application/customer benefits

- Pre-assembled clamping pallet for APS 140
- Universal applicable
- 2 Versions: Premium and Basic

Technical features

- Grid dimension 200 mm
- Fully assembled including clamping pins
- Premium Version with additional adaption for module units
- Rust protected

Standard equipment

Clamping pallet fully assembled with
1 centering pin (type A),
1 sword pin (type B),
Transport screws

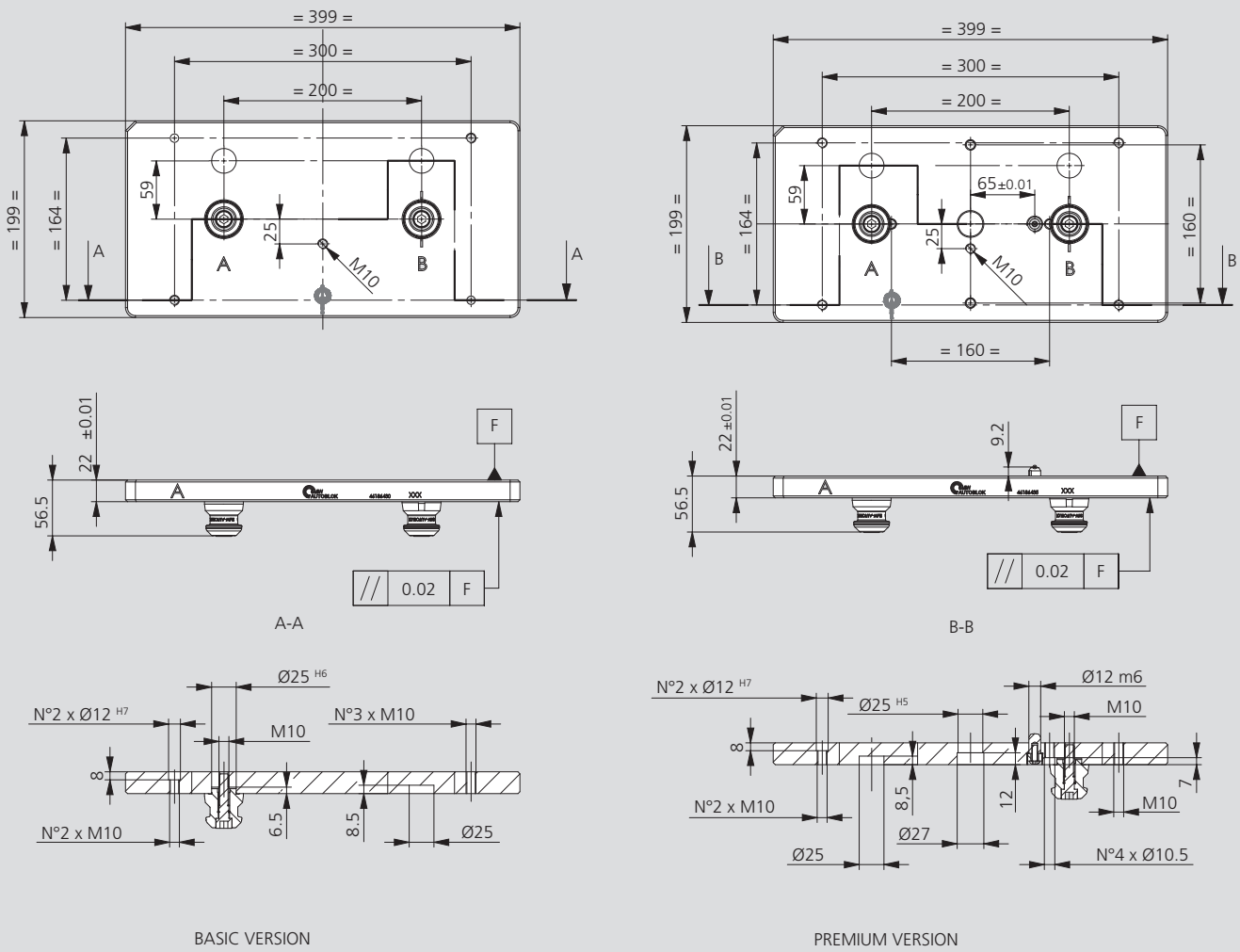

Subject to technical changes.

Order numbers

Type	Id. No.
Clamping pallet APS 140 Premium	46186435
Clamping pallet APS 140 Basic	46186430

High quality clamping pallet

APS 140

■ Basic
■ Premium

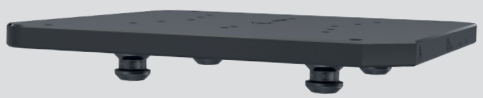

Application/customer benefits

- Pre-assembled clamping pallet for APS 140
- Universal applicable
- 2 Versions: Premium and Basic

Technical features

- Grid dimension 200 mm
- Fully assembled including clamping pins
- Premium Version with additional adaption for module units
- Rust protected

Standard equipment

Clamping pallet fully assembled with
1 centering pin (Type A),
1 sword pin (Type B),
2 clamping pins (Type C),
Transport screws

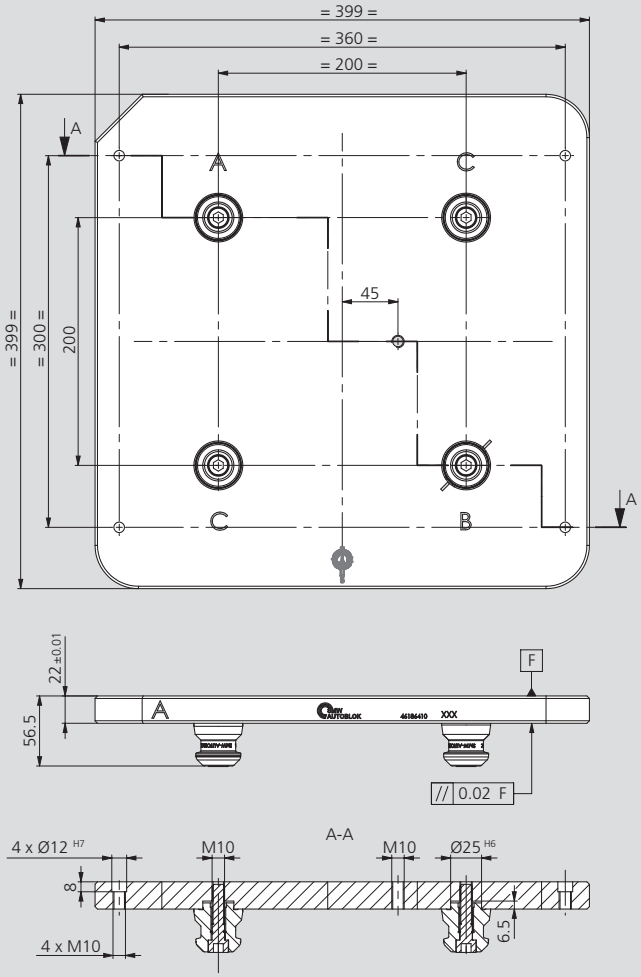

BASIC VERSION

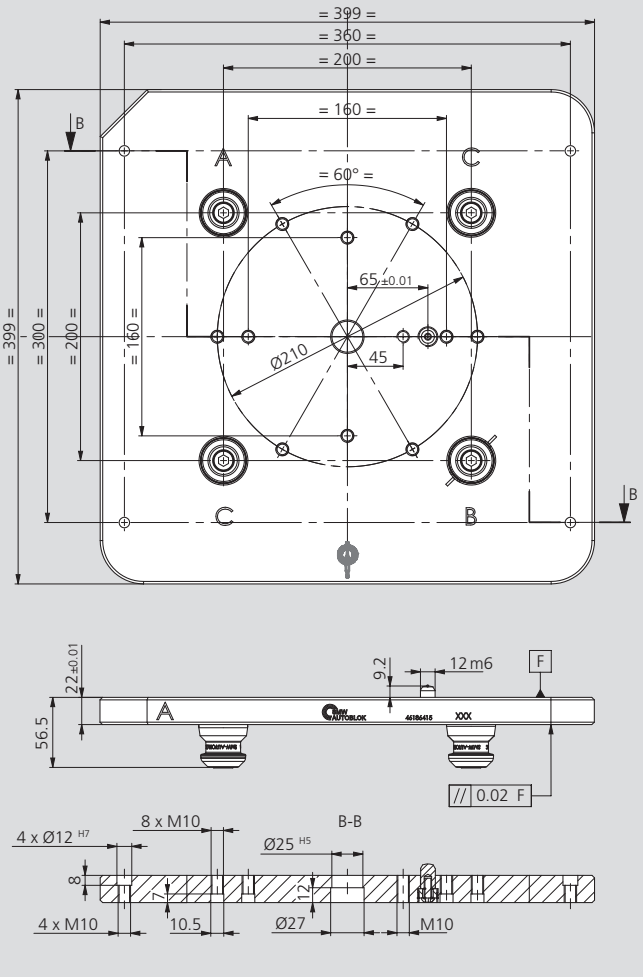

PREMIUM VERSION

Subject to technical changes.

Bestellnummern

Type	Id. No.
Clamping pallet APS 140 Premium	46186415
Clamping pallet APS 140 Basic	46186410

Q400

Clamping Pallet Q400

■ Pallet prepared for mounting SGSF chuck

This pallet is prepared
for loading with robots.

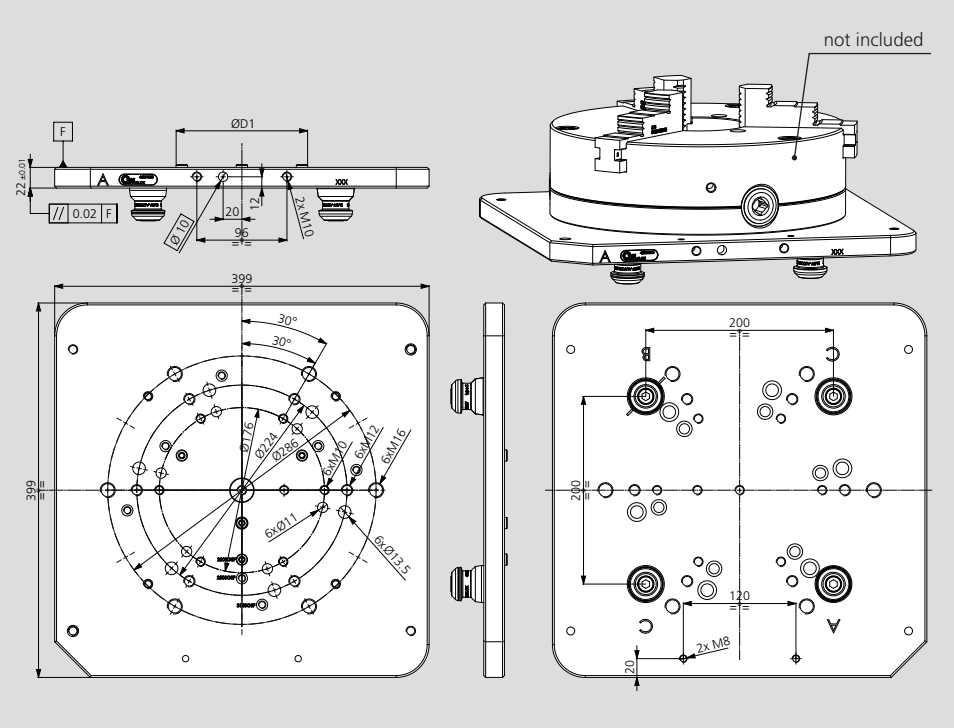

Subject to technical changes.

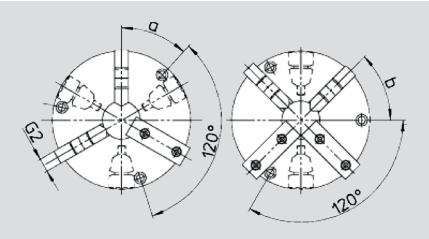

Chuck type SGS-SGSF		200-55	250-76	315-103
Front thread 3+3		33031220	33031225	33031231
Front thread 4+4		33033220	33033225	33033231
	Set-3 GRC	03652030	03652530	03653130
	Set-4 GRC	03652040	03652540	03653140
	Set-3 Soft jaws	03602030	03602530	03603130
	Set-4 Soft jaws	03602040	03602540	03603140

Type pallet (without chuck)	Id. No.	Weight [mm]	Manual chucks SGSF (optional)	
			Ø D1	Chuck model
Pallet Q400 prepared for chucks 200-250-315 SGSF handling robot	46201020	28	159.9	200 SGSF
			199.9	250 SGSF
			259.9	315 SGSF

Q400

Clamping Pallet Q400

■ Pallet prepared for mounting HG-N chucks

This pallet is prepared
for loading with robots.
For information on HG chucks
see page 320 - 339

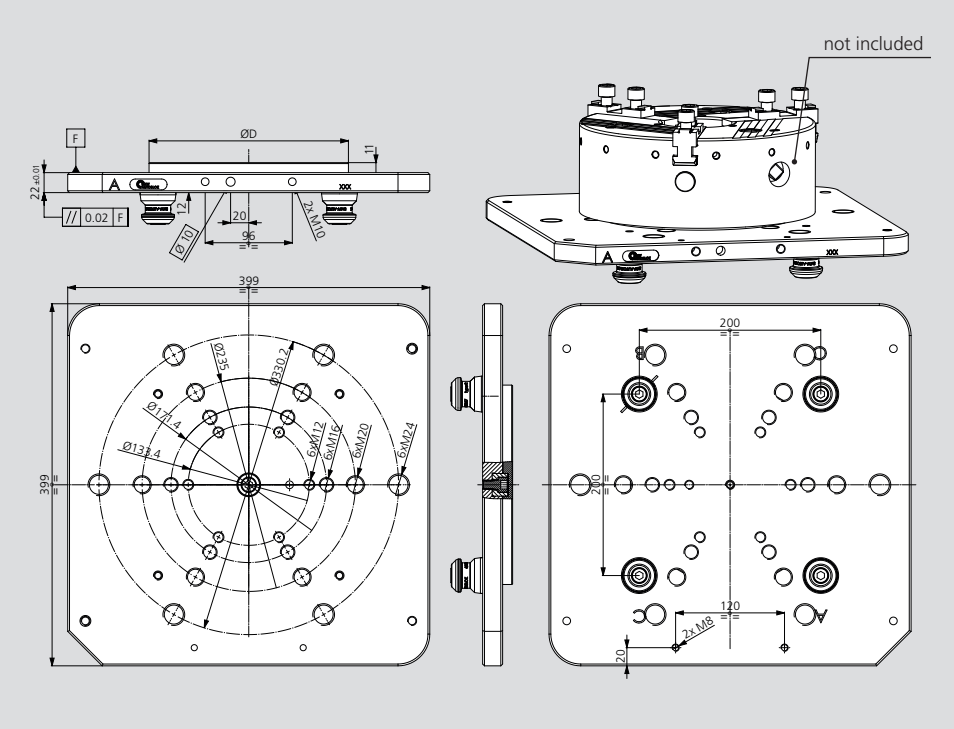

Subject to technical changes.

Type pallet (without chuck)	Id. No.	ØD	Weight [kg]
GRP pallet Q400 + mounting D220 AUTC 260HG loading robot	46201012	219.7	30
GRP pallet Q400 + mounting D300 AUTC 315HG loading robot	46201013	299.7	32
GRP pallet Q400 + mounting D380 AUTC 400-500HG manual loading	46201014	379.7	36

Clamping pallet for automation with MC150x200 vises
■ **Pallet prepared for mounting 1 vise**

4 APS 140

This pallet is **not** prepared
for handling with robots.
For information on MC vises
see page 283 - 288

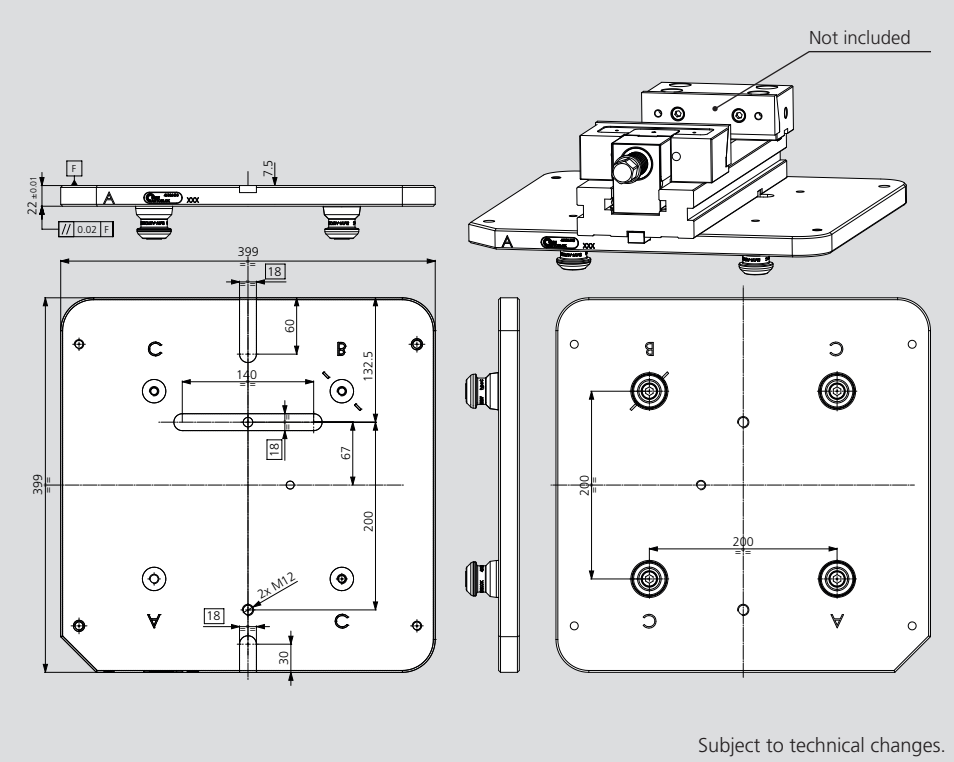

Subject to technical changes.

Type pallet (without vise)	Id. No.	Weight [kg]
Pallet Q400 prepared for 1 vise MC150x200 manual loading	41702271	28

Clamping pallet for automation with MC150x200 vises
■ **Pallet prepared for mounting 2 vises**

4 APS 140

This pallet is prepared
for handling with robots.
For information on MC vises
see page 283 - 288

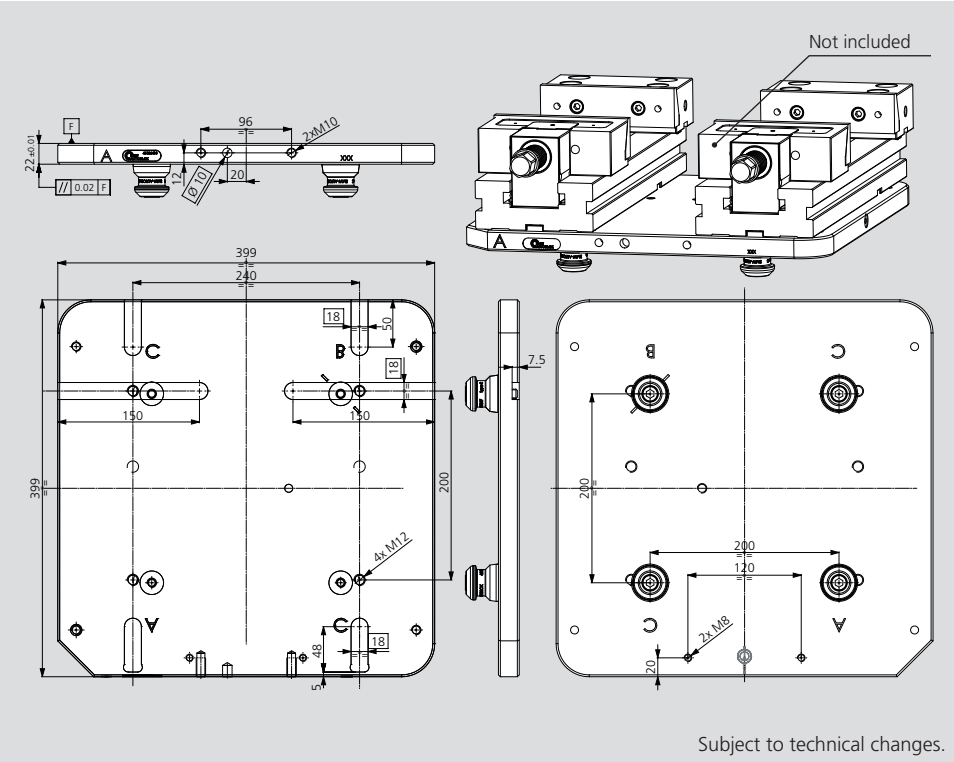

Subject to technical changes.

Type pallet (without vise)	Id. No.	Weight [kg]
Pallet Q400 prepared for 2 vises MC150x200 robot loading	41702261	28

APS 100 / 140

Spacer for combi units

Application/customer benefits
- Spacers to adapt more different module units
- Universal use

Technical features
- Height 20 mm

Standard equipment
Spacer without clamping pin

46168371

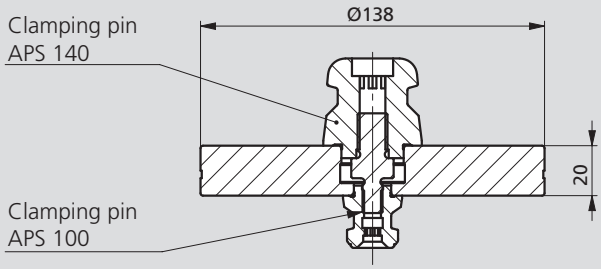

46168366

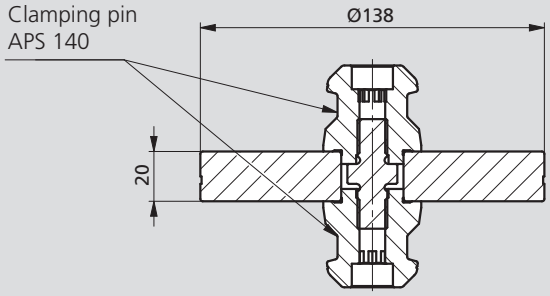

46168370

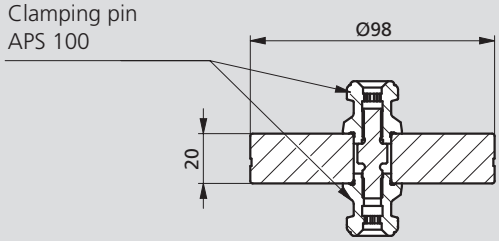

Type	Id. No.	Height [mm]	Weight [kg]
Spacer H20 APS 140-100	46168371	20	2.2
Spacer H20 APS 140-140	46168366	20	2.3
Spacer H20 APS 100-100	46168370	20	1.1

Application Examples

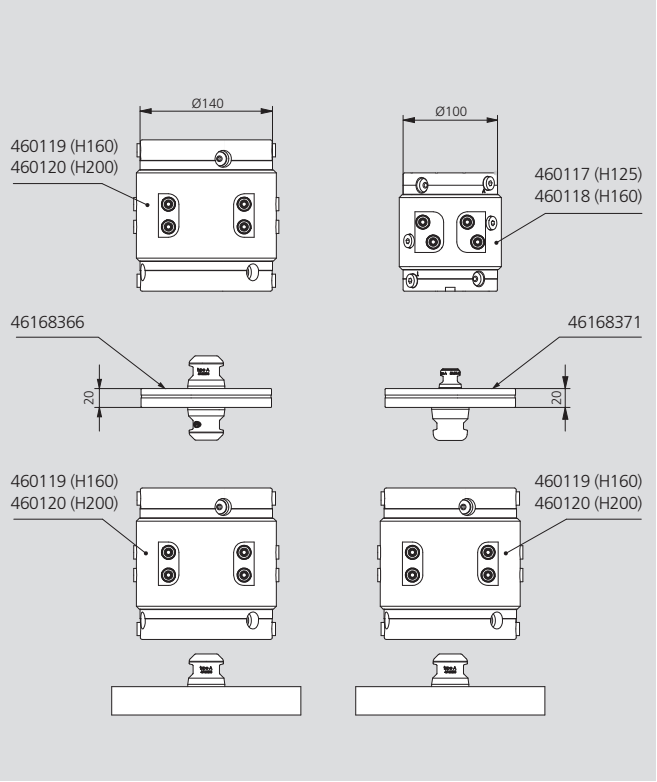

Subject to technical changes.

Multi-Slot screw for the positioning of clamping units

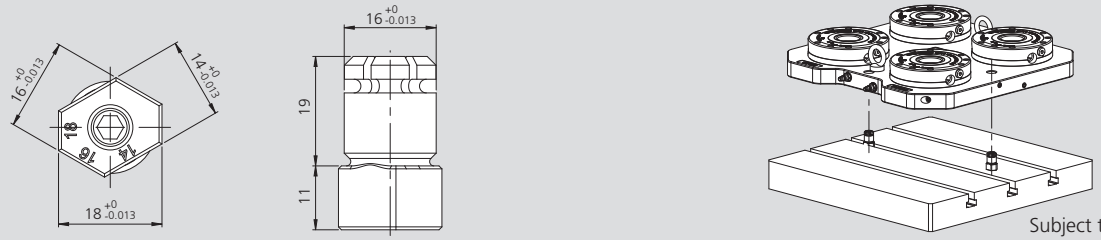

Subject to technical changes.

Type	Id. No.
Multi-Slot 14 / 16 / 18	71290182

Protection cover for screws for APS modules

Subject to technical changes.

Type	Id. No.
APS 100	46162129*
APS 140	46162309*
APS 160	46162609*
APS 190	46162609*
APS 250	46165109*

* The Id. No. refers to one single piece.

Protection cover quick connection 1/8“

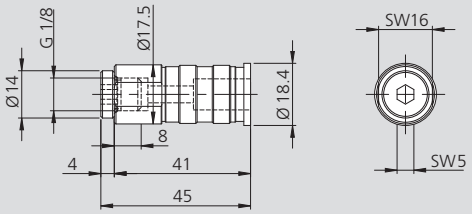

Subject to technical changes.

Type	Id. No.
APS 100 / 140	46167019*

* For all models. Must not be used in rotation.

Quick fitting female 1/8“

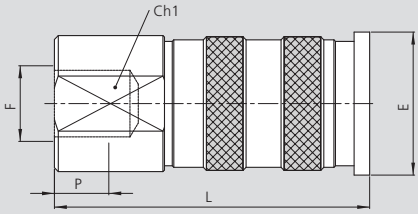

Subject to technical changes.

Type	Id. No.	Ø E	F	L	P
APS 100 / 140	71612801*	18.8	G1/8	42	7

* For all models. Must not be used in rotation.

Quick fitting male 1/8“

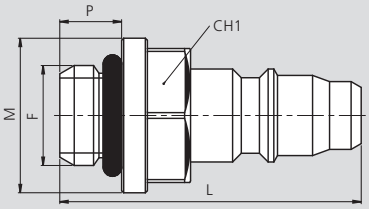

Subject to technical changes.

Type	Id. No.	F	L	Ø M	P
APS 100 / 140	71612802*	G1/8	29.3	15	6

* For all models. Must not be used in rotation.

Keys

Keys kit for all APS models

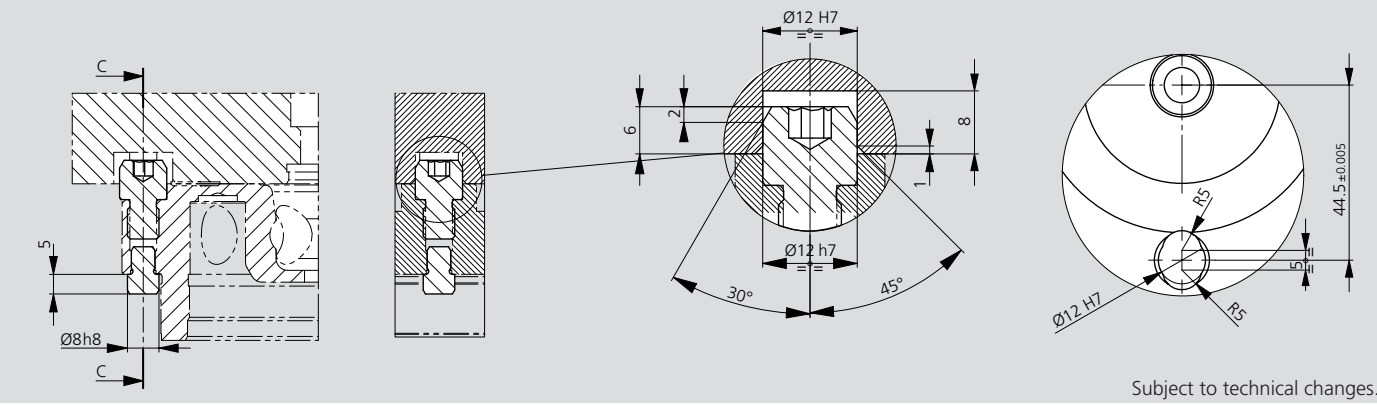

Subject to technical changes.

Id. No.
46162133 - Key kit for APS 100

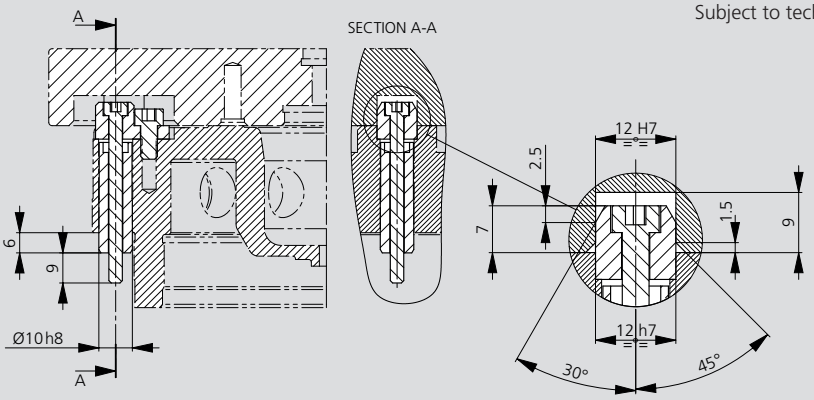

Subject to technical changes.

Id. No.
46162333 - Key kit for APS 140E / APS 190E
46162335 - Key kit SMF 12,5 APS 140E / APS 190E

Covers

Magnet protection covers for all APS models

For Basic / Premium Light module

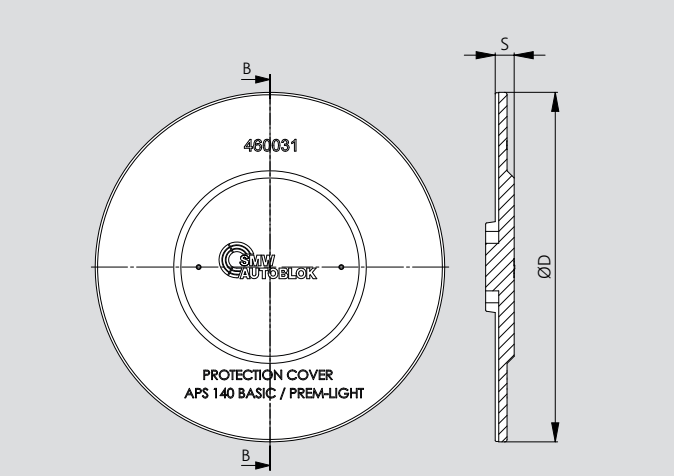

Subject to technical changes.

Id. No.	Model	S	ØD	Weight
460031*	Protection cover with magnet APS 140 Basic	8	147	0.8 kg
46165730*	Protection cover with magnet APS 160 Basic	8	167	1 kg

For Premium module

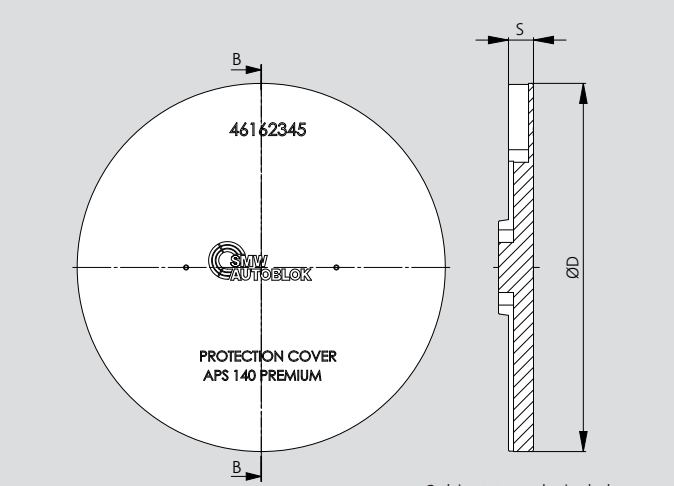

Subject to technical changes.

Id. No.	Model	S	ØD	Weight
460030*	Protection cover with magnet APS 100 Premium	8	107	0.45 kg
46162345**	Protection cover with magnet APS 140 Premium	10	147	0.45 kg
46162625**	Protection cover with magnet APS 190 Premium	10	197	0.85 kg
46165033**	Protection cover with magnet APS 250 Premium	10	257	1.5 kg

*Steel **Aluminium

Pair of clamps

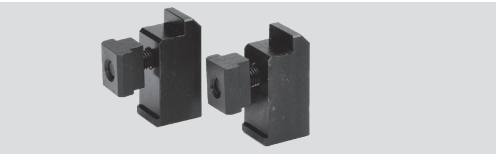

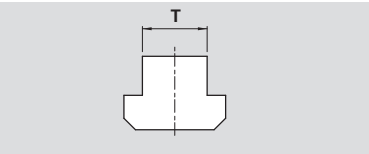

Consisting of:
Pair of clamps
incl. T-nut and
screw

Type	Id. No.					
T	12 mm	14 mm	16 mm	18 mm	20 mm	22 mm
APS	58042792	58042793	58042794	58042795	58042796	58042797

Pre-centering

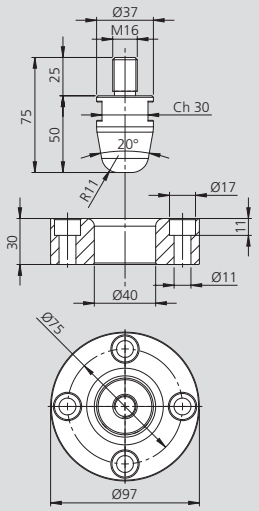

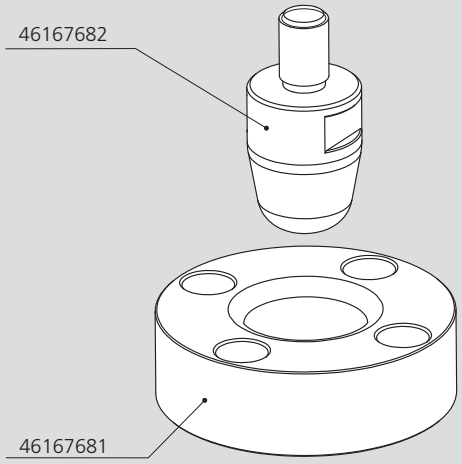

Subject to technical changes.

Interface plate for TCi / MCi 150 on APS 140

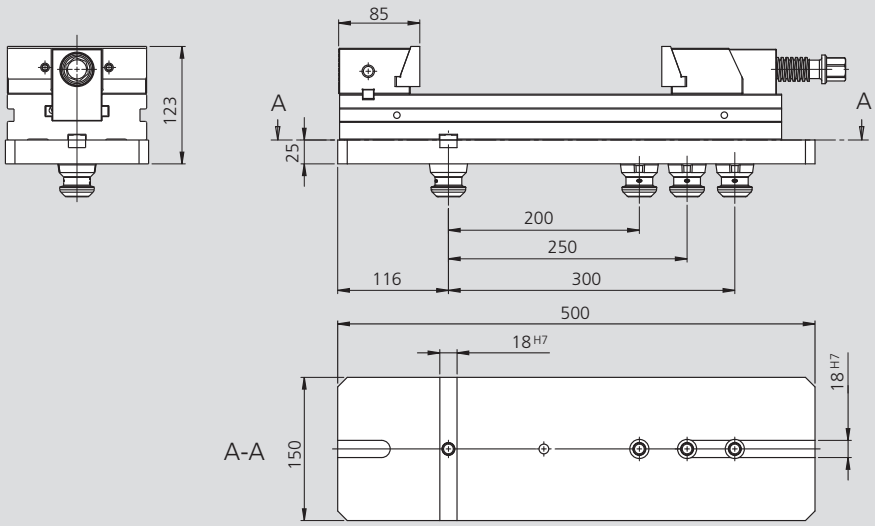

Subject to technical changes.

Order numbers

Type	Id. No.	Weight [kg]
Interface plate for TCi/MCi 150 on APS 140	46167710	14

Note: 2 pieces (1 Type A, 1 Type B) clamping pins included.

Dimensions of standard adaptation for machine tools pallet

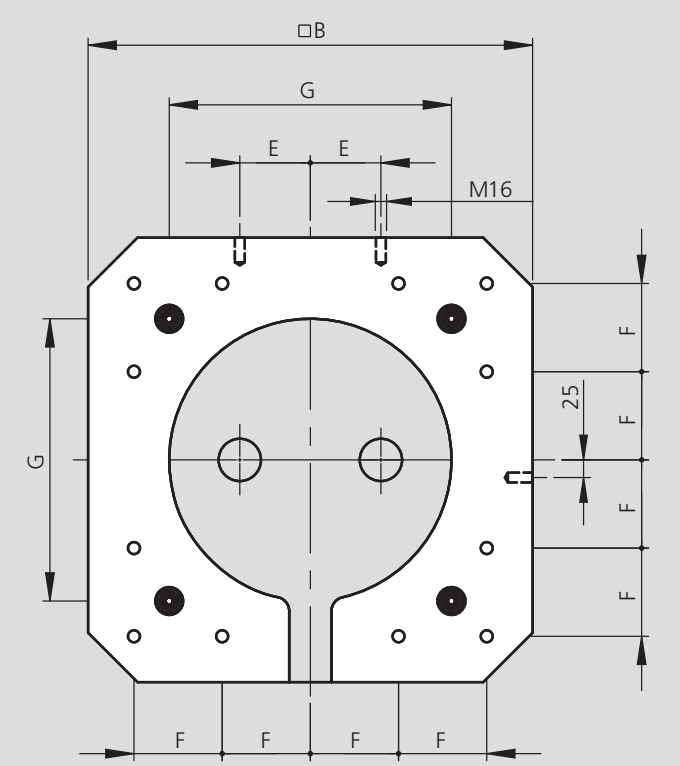

Subject to technical changes.

B [mm]	E [mm]	F [mm]	G [mm]
400	55	80	250
500	75	100	300
630	100	125	420

Manufacturing tolerances

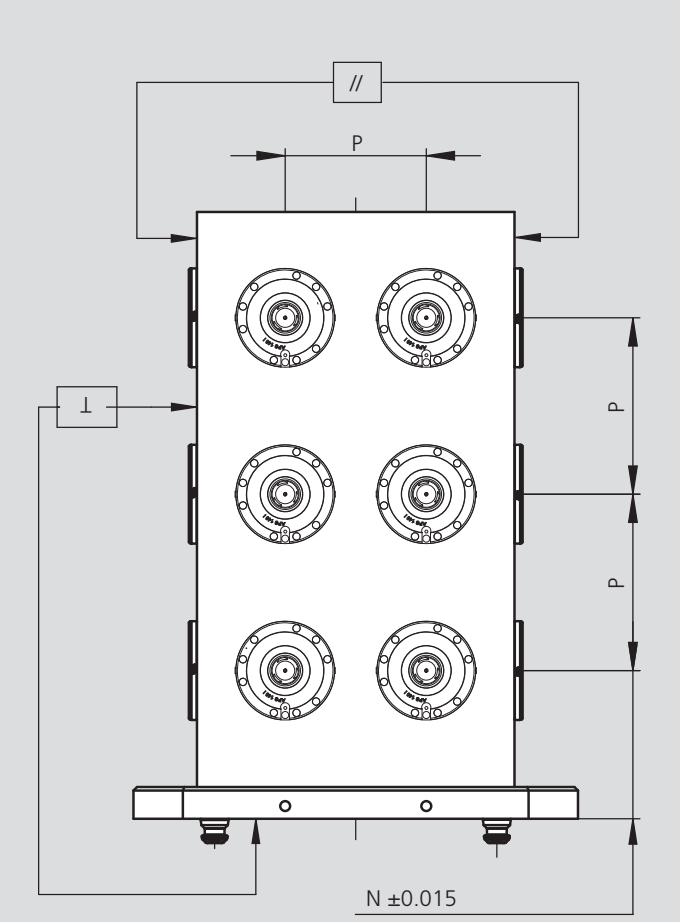

Subject to technical changes.

⊥	//	P
0.02 / 0.035	0.03 / 0.05	± 0.01 / ± 0.02
500 / 1000	500 / 1000	200 / 300

Application examples (Tombstone dimensions, type and number of modules are made according to customer specifications)

Tombstone with 8 APS modules

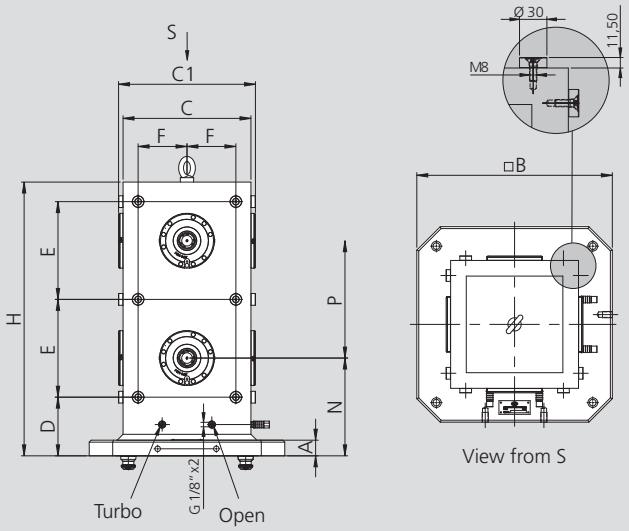

Subject to technical changes.

Tombstone with 24 APS modules

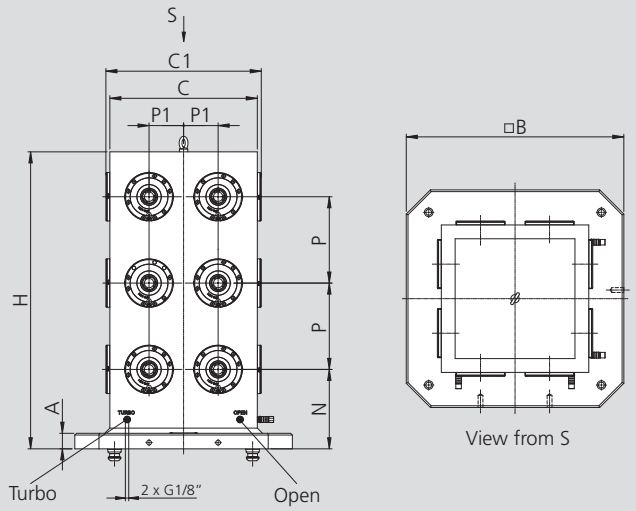

Subject to technical changes.

Tombstone with 12 APS modules

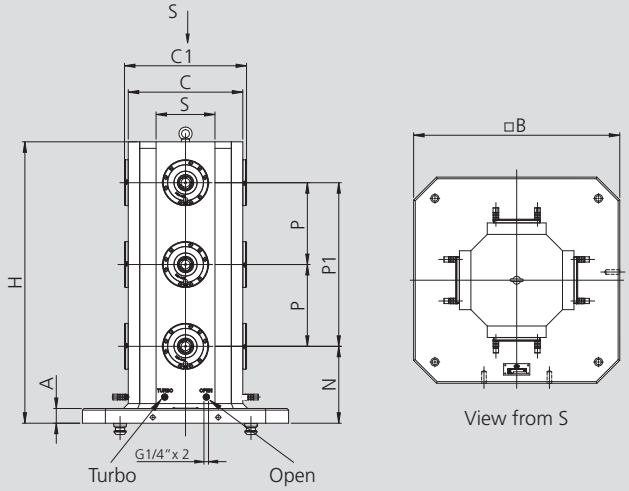

Subject to technical changes.

Tombstone with 6 APS modules

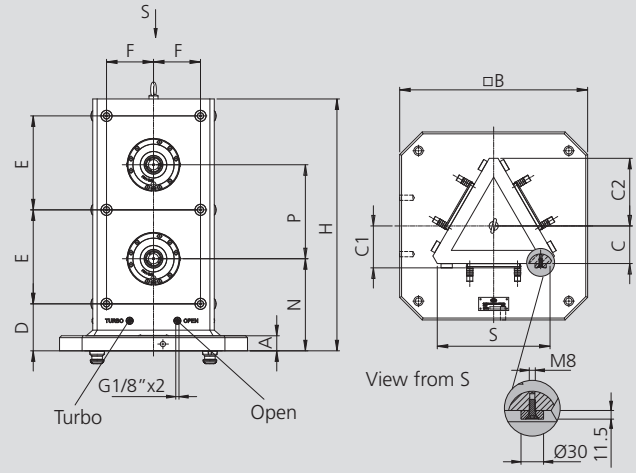

Subject to technical changes.

Crankweb with 8 APS modules

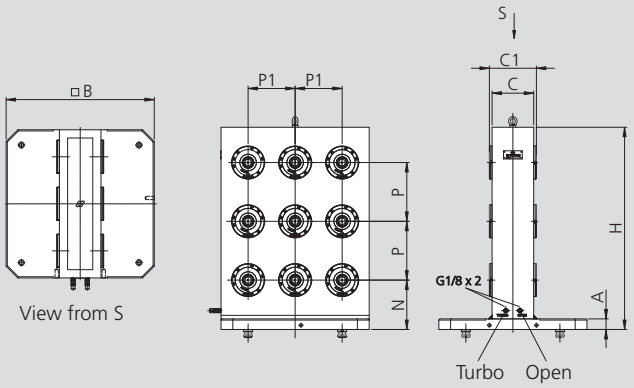

Subject to technical changes.

Tombstones

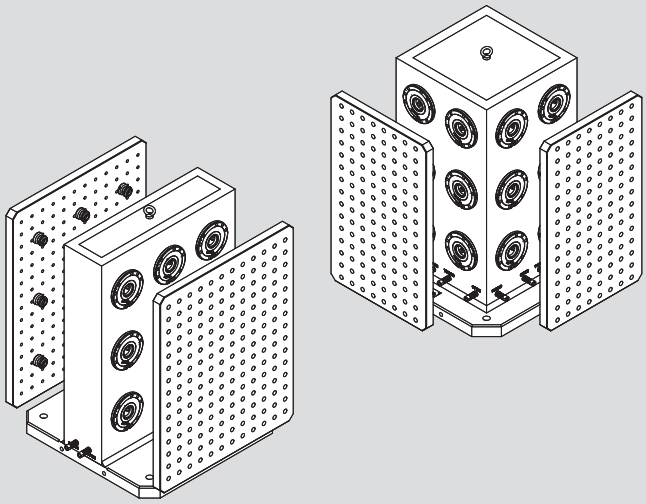

Subject to technical changes.

APS

Tombstones and crankwebs on customer request

- Request form
- Simply fill in and send to:
  www.stationary-workholding.com

Tombstones

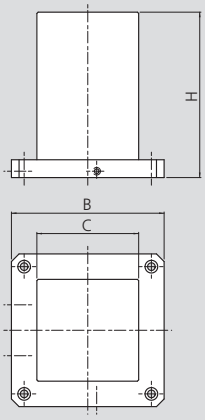

Technical data	
B	mm
C	mm
H	mm

Number of modules	
Modules type	

PREMIUM E open - Turbo	
PREMIUM LIGHT I open - Turbo	
BASIC open	

Cross Tombstones

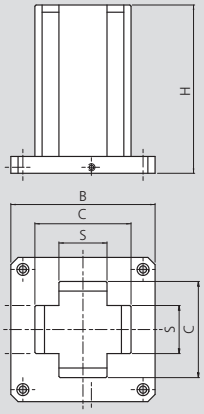

Technical data	
B	mm
C	mm
S	mm
H	mm

Number of modules	
Modules type	

PREMIUM E open - Turbo	
PREMIUM LIGHT I open - Turbo	
BASIC open	

Triangular Tombstones

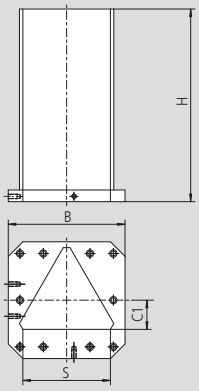

Technical data	
B	mm
C1	mm
S	mm
H	mm

Number of modules	
Modules type	

PREMIUM E open - Turbo	
PREMIUM LIGHT I open - Turbo	
BASIC open	

Crankwebs

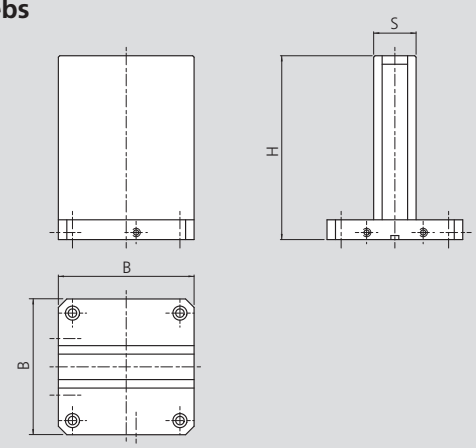

Technical data	
B	mm
S	mm
H	mm

Number of modules	
Modules type	

PREMIUM E open - Turbo	
PREMIUM LIGHT I open - Turbo	
BASIC open	

Application examples

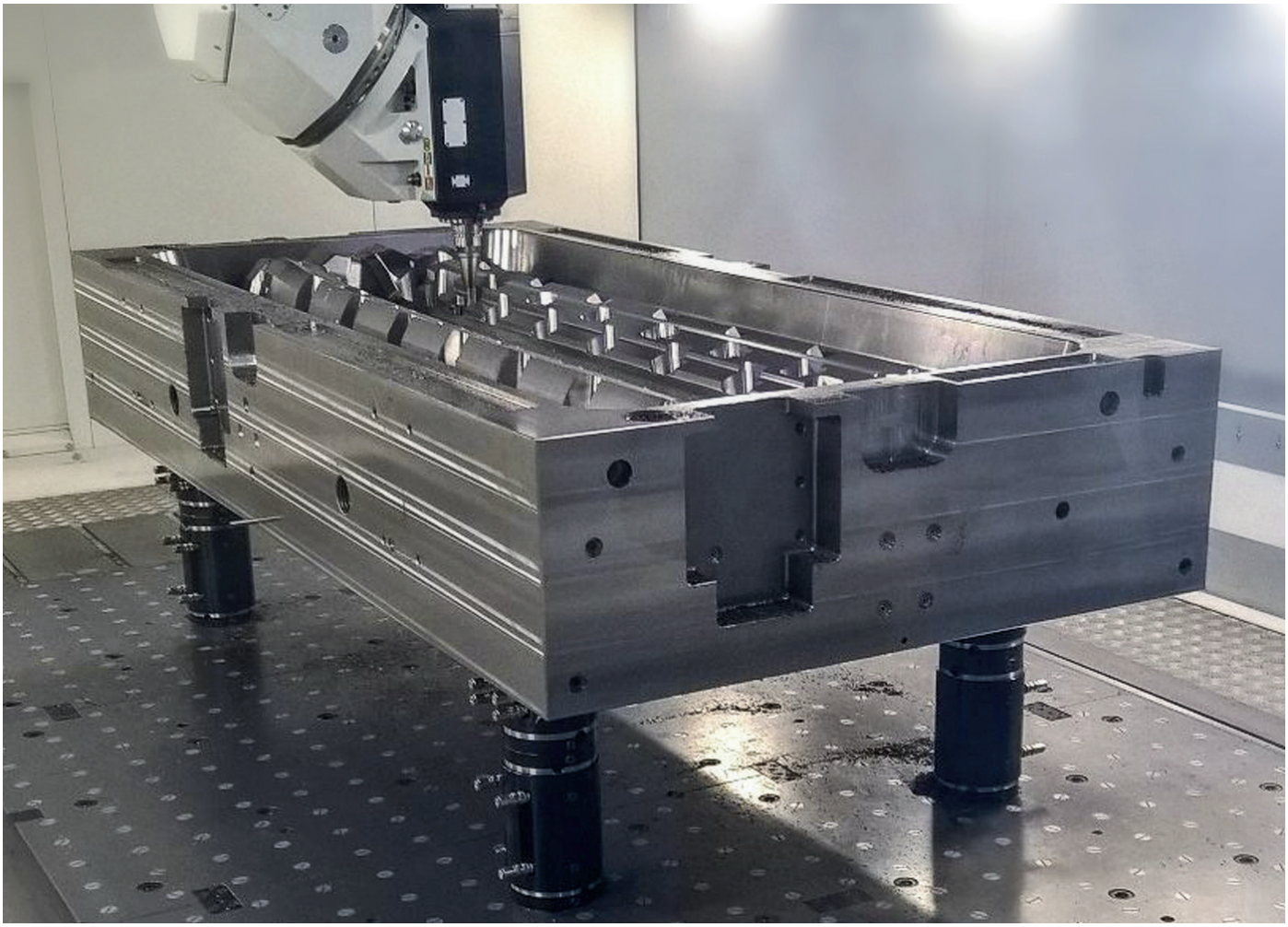

T-nuts set

for clamping unit APS and height extension APS

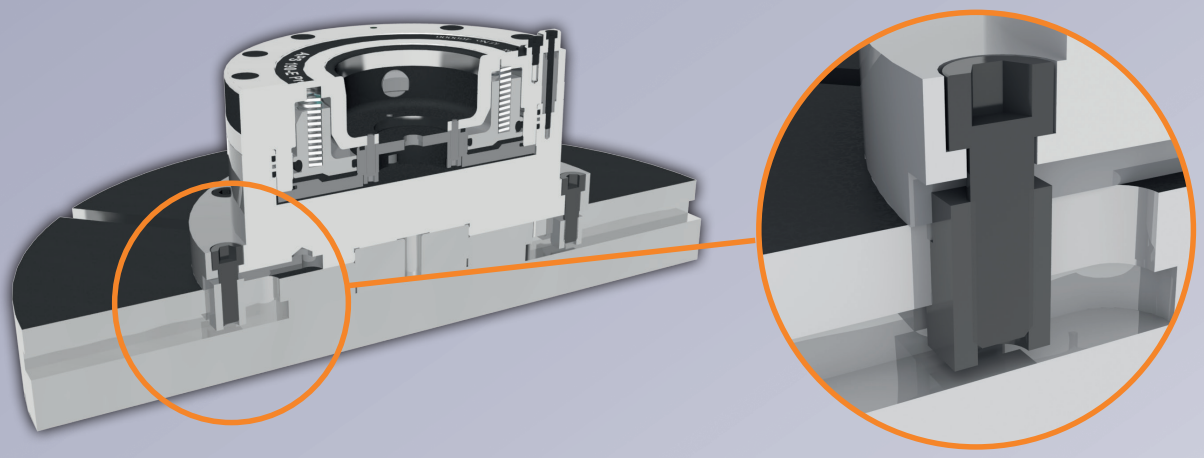

1 Set 9 T-nuts - 12-M10 for clamping unit 4 APS 140

▶ T-SLOT 12
46204100

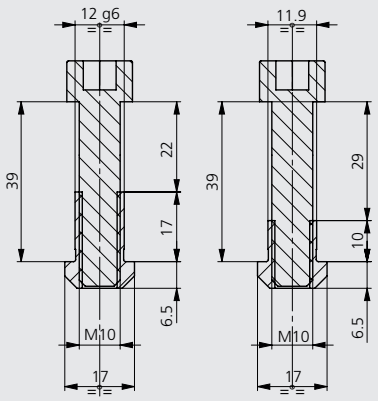

▶ T-SLOT 14
46204101

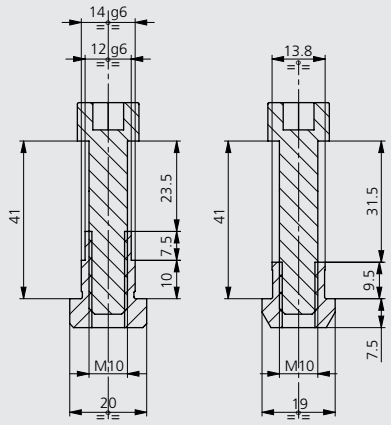

▶ T-SLOT 18
46204102

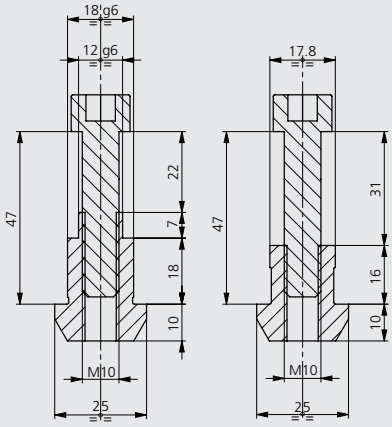

2 Set 8 T-nuts - 12-M10 for height extension APS

▶ T-SLOT 12
46204103

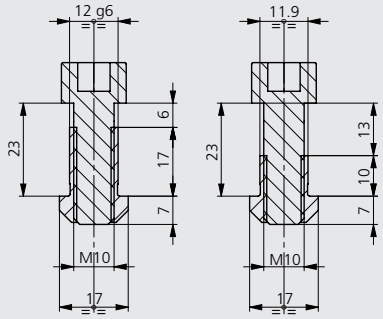

▶ T-SLOT 14
46204104

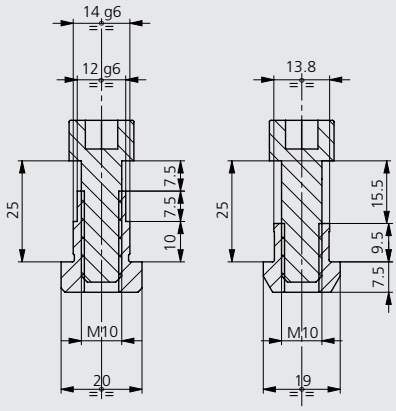

▶ T-SLOT 18
46204105

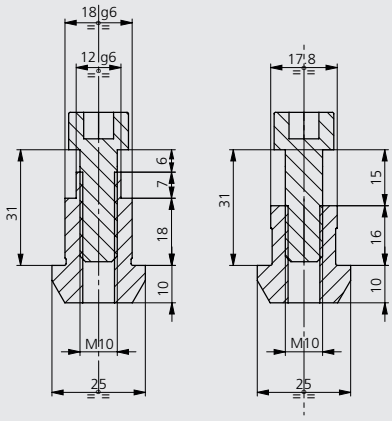

Application/customer benefits

- Smart, easy and accurate solution for large plates
- Any dimension of plates for machine tool tables possible
- Safe and reliable connection between the plates
- Maintenance free
- Large entry radius of the clamping pins for easy and safe loading

Technical features

- Sealed connecting element
- Media feed trough the connecting element

Connecting element for media transfer

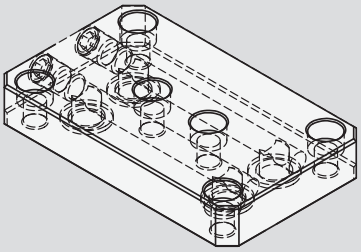

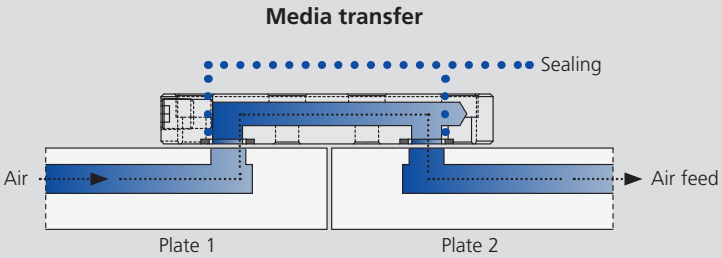

Mechanical connection

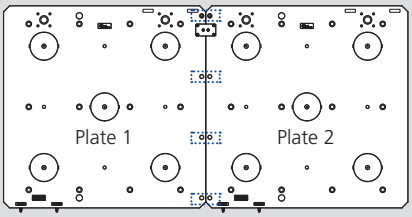

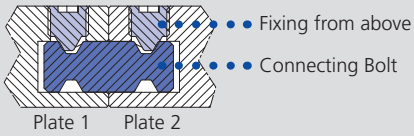

Subject to technical changes.

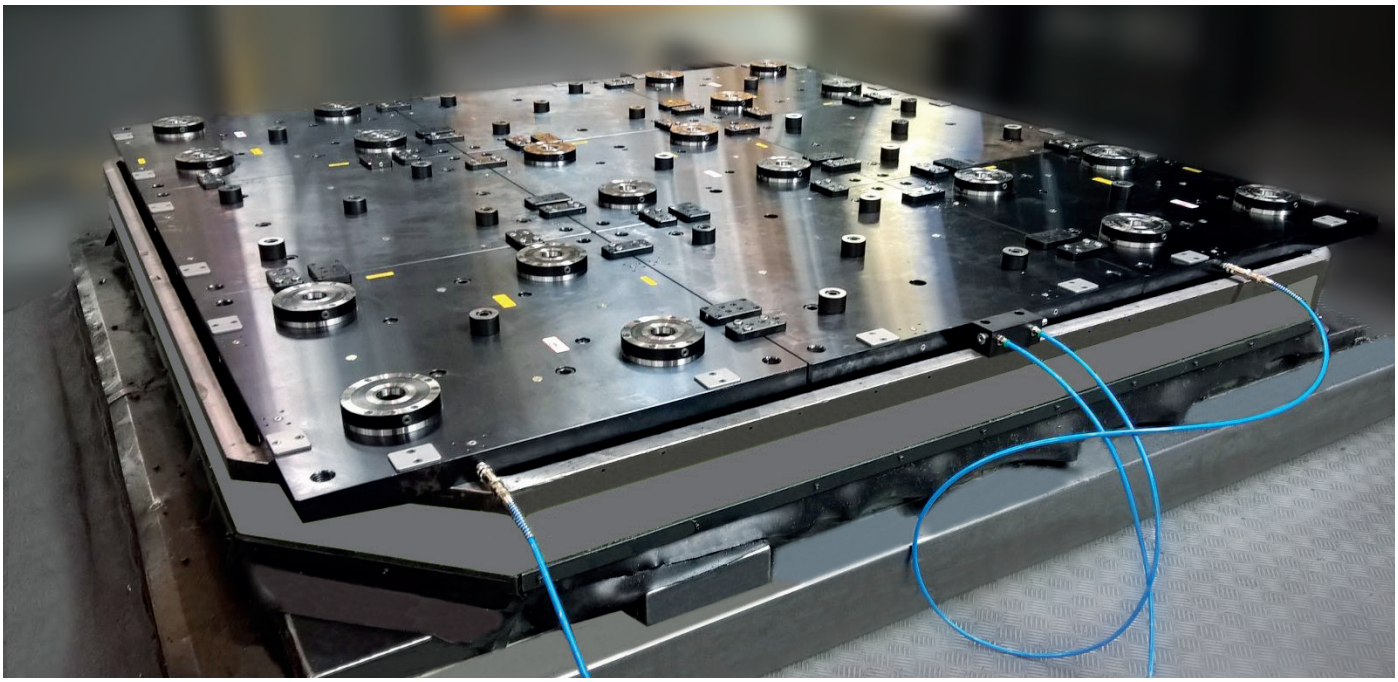

APS Setting Table

SERIES 800

1 Functional Overview of the setting table

- Accurate to within 0.010
- Rotation speed variable between 0 and 3 r.p.m.
- Hand set jogging function with 3 speed selections
- Reduce set up time for loading component to fixture & fixture to machine
- Safety pull chord

Customized setting tables
for fixture & fixture to machine

SERIES 1200

Model	Table sizes	Max. swing	Max. weight of fixture plate & component	r.p.m.	Voltage
SERIES 800	Ø 800	Ø 1100	1500 kg	0 - 3	220, 240, 380 - 480V
SERIES 1200	Ø 1200	Ø 1700	2000 kg	0 - 3	220, 240, 380 - 480V

WPS Workpiece positioning system

▶ Convincing advantages

Best accessibility

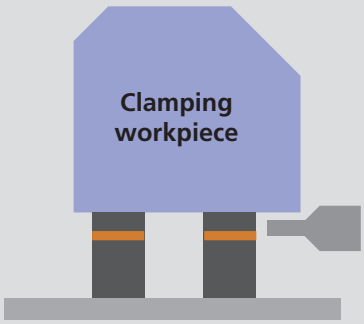

■ Best accessibility, ideal for the 5-axis machining without interference.

Modular kit

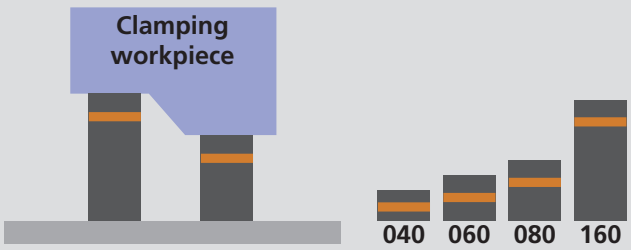

■ Modular kit with a wide range of accessories ensures the flexible clamping of nearly every workpiece geometry. Furthermore, the clamping pins are interchangeable to the proven zero point clamping system APS.

Highest repeatability, extremly strong clamping

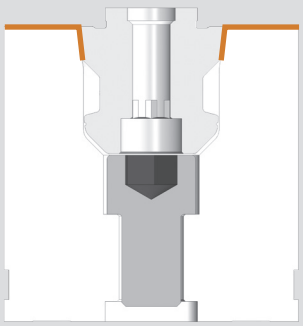

■ The precise taper / face support ensures the interlocking and safe clamping with highest holding forces and maximum stiffness.

Increased efficiency

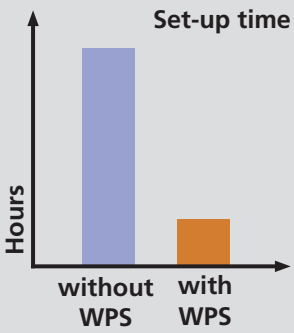

■ Huge reduction of the set-up times and maximum efficiency. No other clamping devices are necessary.

Fully sealed

■ Clamping modules are hermetic sealed, therefore low maintenance. The availability of the machine is increased.

▶ Function

1 Clamping pins

Clamping pins WPS with adapter
for fit dia. 18, 20, 22, 24 and 25 mm
thread M12 and M16

- SMW-AUTOBLOK clamping pins for the clamping of workpieces or the top mounting are case hardened. The clamping pins are protected against wear and rust. The accurate manufacturing ensures highest centering precision.
  Due to the weight of the workpiece and the clamping situation different versions are available as a standard.

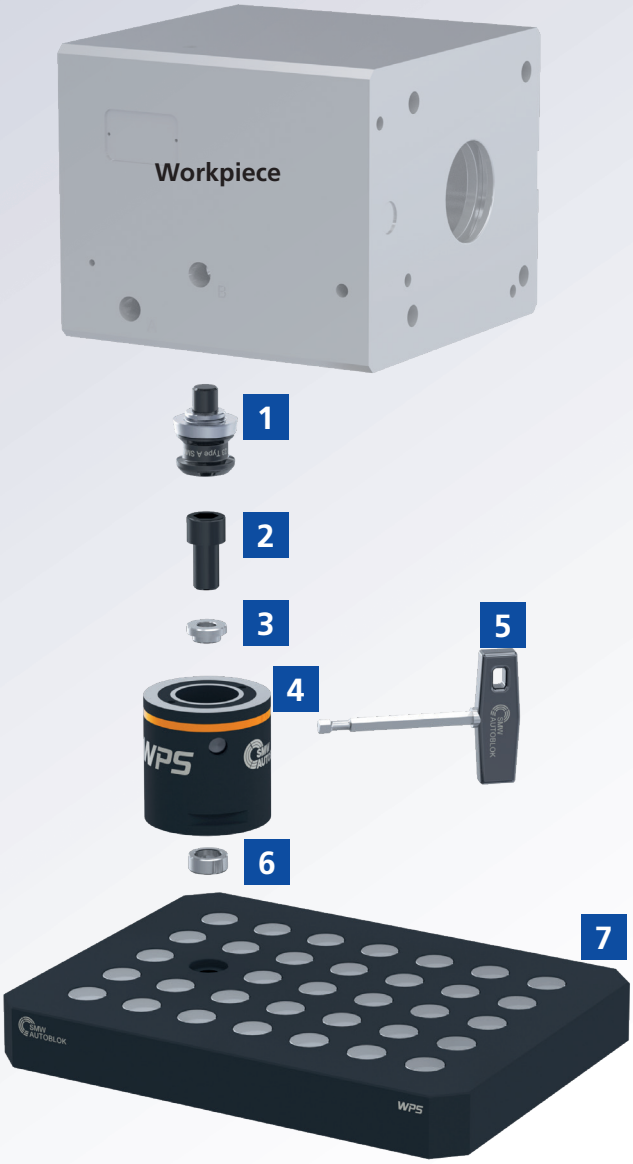

2 Mounting screw

- Mounting screws for the clamping modules with thread M12 or M16 for maximum stability and stiffness.

3 Reducing washer

- Reducing washer for the mounting of the clamping modules for mounting screw M10 or M12.

4 Clamping modules

- Clamping modules with different heights (40, 60, 80 and 160 mm) guarantee the clamping of almost all workpiece geometries. The clamping modules can be mounted either on a grid plate or by means of a mounting flange direct on onto the machine table.

5 Single quick-actuation

- Thanks to the single quick-actuation, the modules can be opened and closed by only 3.5 rotations. The actuation is done manual and without any media.
- The ideal accessibility of the actuation ensures a comfortable handling and use of the clamping system.

6 Adaption washers

- The adaption washers are available in different diameters (standard 25 mm). The clamping modules can be positioned exactly on the grid plate.

7 Grid plate

- The clamping modules will be mounted on the grid plate. Grid plates are available in different standard versions. Therefore, different workpiece configurations are possible. The grid plates are manufactured from tempered quality steel and are protected against wear and rust.

WPS Workpiece positioning system

Clamping pins Basic WPS

Clamping pins	Id. No.
Clamping pins Basic M12 (without adapter)	460122
Clamping pins Basic M16 (without adapter)	460123
Clamping pins Basic 7/16" (without adapter)	460108
Clamping pins Basic 5/8" (without adapter)	460109

Adapter

Ø	Type	Id. No.	Type	Id. No.	Type	Id. No.
18*	A	460124	B	460341	C	460129
20	A	460125	B	460342	C	460130
22	A	460126	B	460343	C	460131
24	A	460127	B	460344	C	460132
25	A	460128	B	460345	C	460133

Detail description see page 89

* Use only together with Clamping pins M12 / 7/16"

Clamping module with flange

Height 40 mm
Id. No. 460180

Adaption washer Ø 25h7 on [D] pass diameter

Adaption washer Ø	Id. No.
Ø D 18	460135
Ø D 20	460136
Ø D 22	460137
Ø D 24	460138
Ø D 25	460139

For detailed description see page 83

Clamping workpiece

Reduction Ø 32

Detail description see page 84

Further clamping modules Ø 80 mountable on top

Height 60 mm, Id. No. 460181
Height 80 mm, Id. No. 460182
Height 160 mm, Id. No. 460183
with mounting kit (order separate):
Mounting kit WPS height 60 mm, Id. No. 460261
Mounting kit WPS height 80 mm, Id. No. 460262
Mounting kit WPS height 160 mm, Id. No. 460263
(Mounting kit consisting of clamping pin and mounting screw)

Mounting with reduction for smaller screws M10 and M12

Mounting screw / reduction for M10 and M12	Screw M10	Reduction M10	Screw M12	Reduction M12
WPS height 60 mm, Bolt lenght 40 mm	207780	460206	207779	460207
WPS height 80 mm, Bolt lenght 50 mm	010814	460204	010212	460205
WPS height 160 mm, Bolt lenght 130 mm	019363	460204	010599	460205

Detail description see page 83

Grid plates (examples)

Grid 50 and 100 mm
Material 1.2311/1.2312

Grid (in center)

Positioning holes Ø25H7, thread M12 / 16

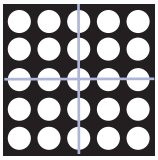

Grid	Length	Width
50 / 100	500	500
50 / 100	600	600
50 / 100	800	800
50 / 100	1000	500
50 / 100	1000	800
50 / 100	1200	800
50 / 100	1000	1000

Special versions on request

Grid (not in center)

Positioning holes Ø25H7, thread M12 / 16

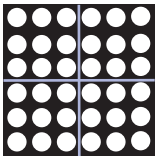

Grid	Length	Width
50 / 100	600	400
50 / 100	500	500
50 / 100	600	500
50 / 100	600	800
50 / 100	1000	500
50 / 100	1000	600
50 / 100	1000	800
50 / 100	1000	1000

Special versions on request

WPS

Workpiece positioning system

Manual zero point clamping system for workpiece direct clamping

- Single quick-actuation for the rapid opening and closing
- Fully sealed

Application/customer benefits

- Huge reduction of set-up times for highest efficiency
- Safe workpiece clamping with maximum holding forces and highest repeatability
- Ideal for 5-axis machining
- Single quick-actuation for the rapid opening and closing of the modules with only 3.5 rotations
- Flexible configurations for customized use
- Interchangeable to the proven zero point system APS

Technical features

- Diameter 80 mm
- Pull-in force 15 kN
- Max. torque 15 Nm
- Repeatability < 0.005 mm
- Holding force 50 / 75 kN (M12 / M16) depending on thread of clamping pin
- 3 clamping slides for maximum hold while clamping
- **proofline®** = fully sealed - low maintenance

WPS 080-040

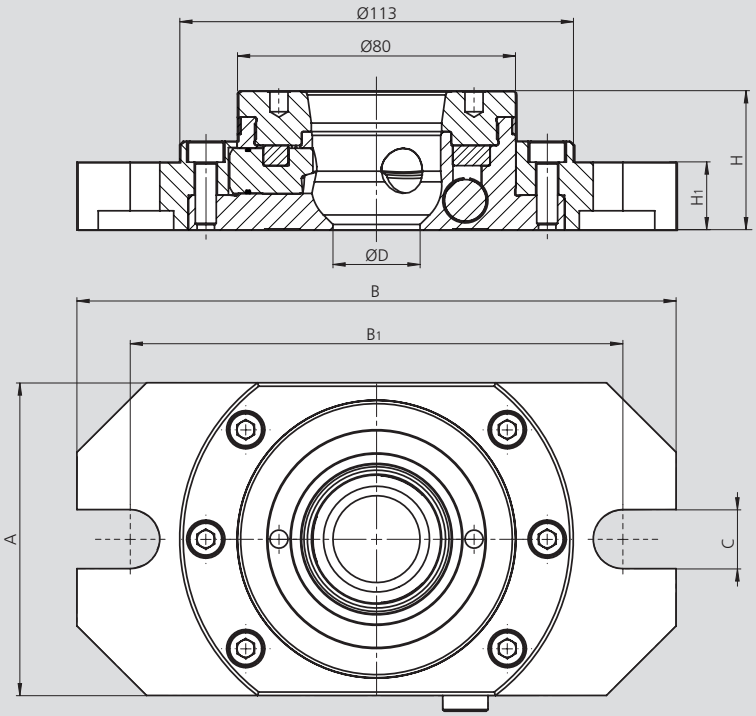

WPS 080-060, 080-080, 080-160

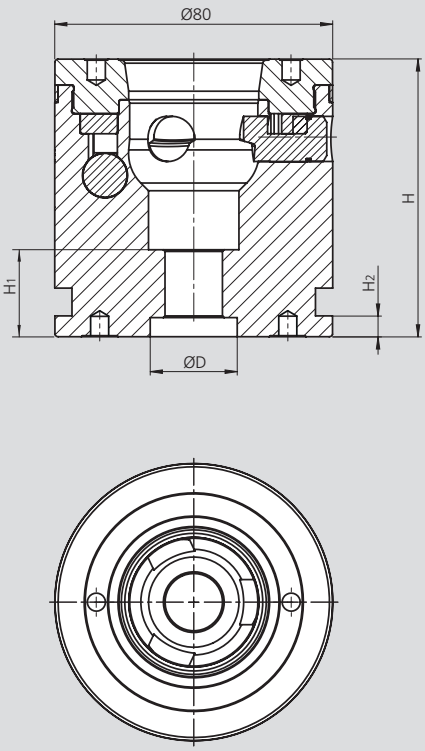

Subject to technical changes.

Technical data

SMW-AUTOBLOK Type	WPS 080-040 460180	WPS 080-060 460181	WPS 080-080 460182	WPS 080-100 460199	WPS 080-120 460461	WPS 080-160 460183
A	90	-	-	-	-	-
B	172	-	-	-	-	-
B1	141.4	-	-	-	-	-
C	17	-	-	-	-	-
D / Depth	Ø 25H6 / 5.5	Ø 25H6 / 5.5	Ø 25H6 / 5.5	Ø 25H6 / 5.5	Ø 25H6 / 5.5	Ø 25H6 / 5.5
H	40 ± 0.005	60 ± 0.005	80 ± 0.005	100 ± 0.005	120 ± 0.005	160 ± 0.005
H1	19.5	21	25	45	25	105
H2	-	6	6	6	6	6
Pull-in force (kN)	15	15	15	15	15	15
Repeatability (mm)	< 0.005	< 0.005	< 0.005	< 0.005	< 0.005	< 0.005
Holding force M12 (kN)	25* / 50*	25* / 50*	25* / 50*	25* / 50*	25* / 50*	25* / 50*
Holding force M16 (kN)	40** / 75**	40** / 75**	40** / 75**	40** / 75**	40** / 75**	40** / 75**

* Holding force for ISO 4762 M10x45 - 12.9 / Holding force for ISO 4762 M12 - 12.9 (see clamping pins)
** Holding force for ISO 10642 M12x55 - 10.9 / Holding force for ISO 4762 M16 - 12.9 (see clamping pins)

Manual zero point clamping system for workpiece direct clamping

- Single quick-actuation for the rapid opening and closing
- Fully sealed

WPS Index

Workpiece positioning system

Application/customer benefits

- Huge reduction of set-up times for highest efficiency
- Safe workpiece clamping with maximum holding forces and highest repeatability
- Ideal for 5-axis machining
- Single quick-actuation for the rapid opening and closing of the modules with only 3.5 rotations
- Flexible configurations for customized use
- Interchangeable to the proven zero point system APS
- Anti rotating protection

Technical features

- Diameter 80 mm
- Pull-in force 15 kN
- Max. torque 15 Nm
- Repeatability < 0.005 mm
- Holding force 50 / 75 kN (M12 / M16) depending on thread of clamping pin
- 3 clamping slides for maximum hold while clamping
- **proofline®** = fully sealed - low maintenance

WPS 080-040 Index

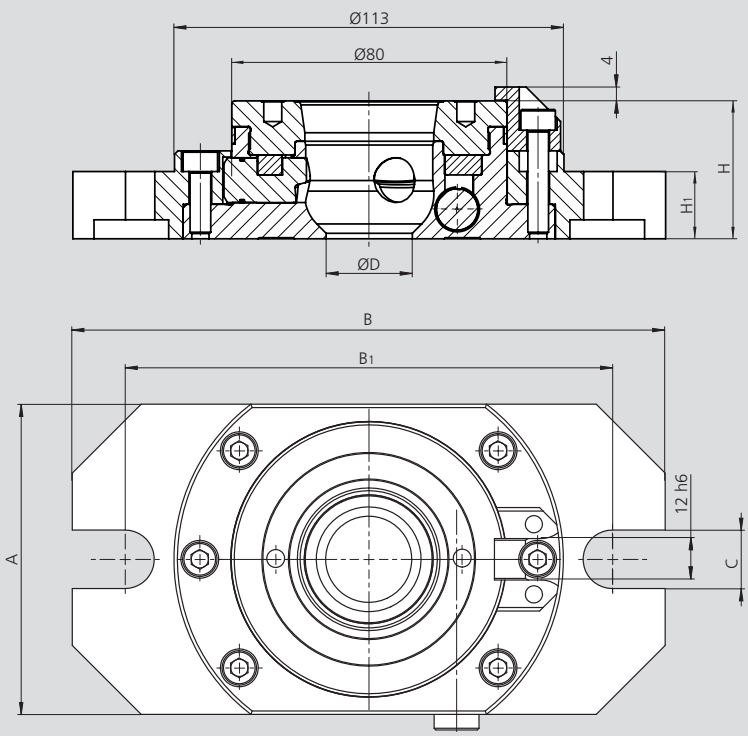

WPS 080-060, 080-080, 080-160 Index

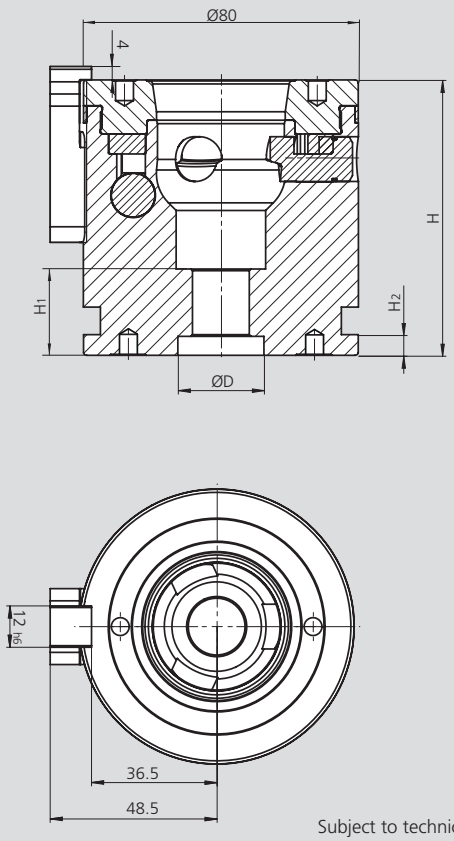

Subject to technical changes.

Technical data

SMW-AUTOBLOK Type	WPS 080-040 460240	WPS 080-060 460241	WPS 080-080 460242	WPS 080-160 460243
A	90	-	-	-
B	172	-	-	-
B1	141.1	-	-	-
C	17	-	-	-
D / Depth	Ø 25H6 / 5.5	Ø 25H6 / 5.5	Ø 25H6 / 5.5	Ø 25H6 / 5.5
H	40 ± 0.005	60 ± 0.005	80 ± 0.005	160 ± 0.005
H1	19.5	21	25	105
H2	-	6	6	6
Pull-in force (kN)	15	15	15	15
Repeatability (mm)	< 0.005	< 0.005	< 0.005	< 0.005
Holding force M12 (kN)	25* / 50*	25* / 50*	25* / 50*	25* / 50*
Holding force M16 (kN)	40** / 75**	40** / 75**	40** / 75**	40** / 75**

* Holding force for ISO 4762 M10x45 - 12.9 / Holding force for ISO 4762 M12 - 12.9 (see clamping pins)
** Holding force for ISO 10642 M12x55 - 10.9 / Holding force for ISO 4762 M16 - 12.9 (see clamping pins)

WPS

Workpiece positioning system

Application examples

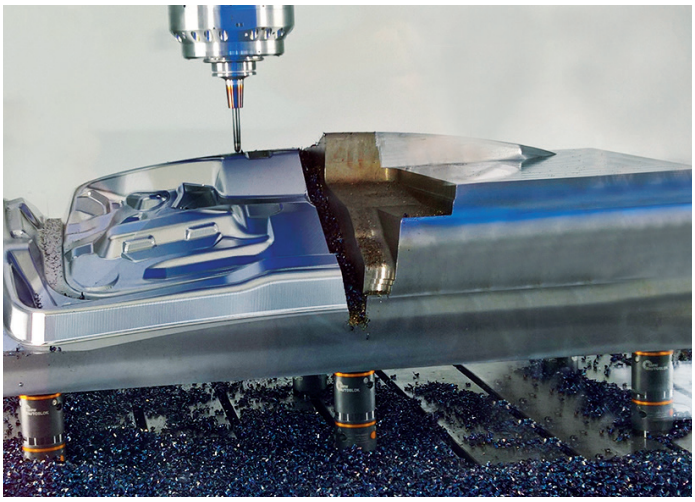

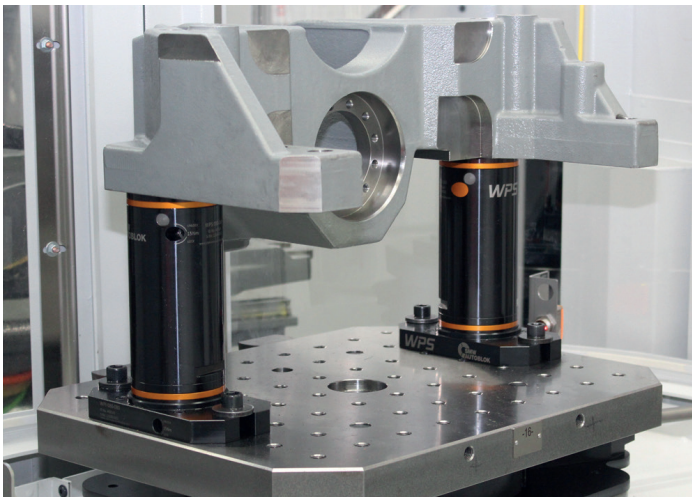

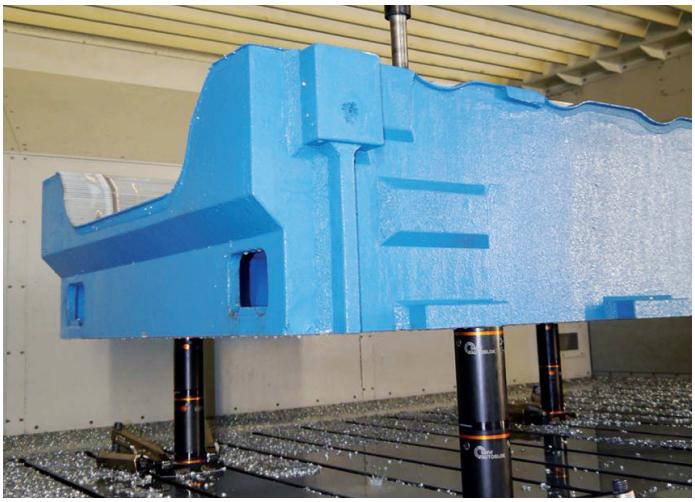

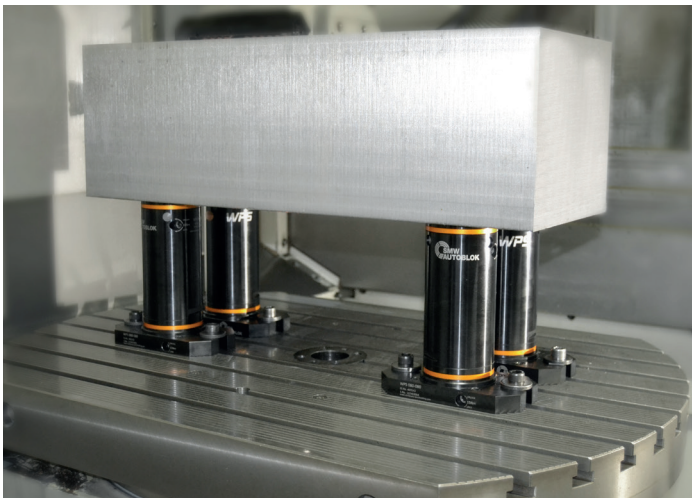

Manual zero point clamping system for workpiece direct clamping

■ Clamping pins 1 piece

WPS

Workpiece positioning system

Type A Type B Type C

Application/customer benefits

- Fixation and positioning on the clamping system WPS
- Wear-resistant due to an extra hard protective coating
- Large entry radius of the clamping pins for easy and safe loading

Technical features

- Centering pin Type A (Standard)
- Sword pin Type B (Positioning pin)
- Clamping pin Type C (with centering play 0.1 mm)

Standard equipment

Clamping pin with mounting screw

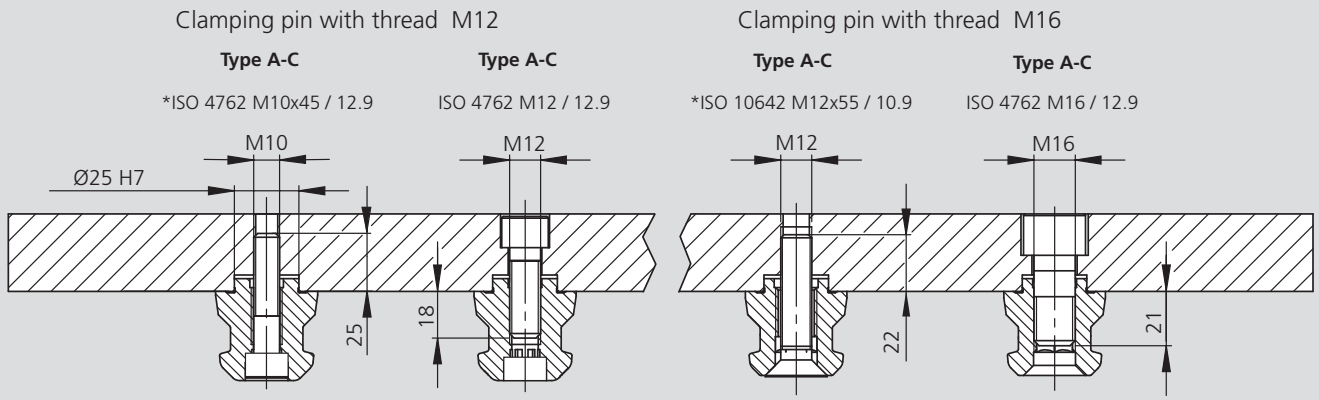

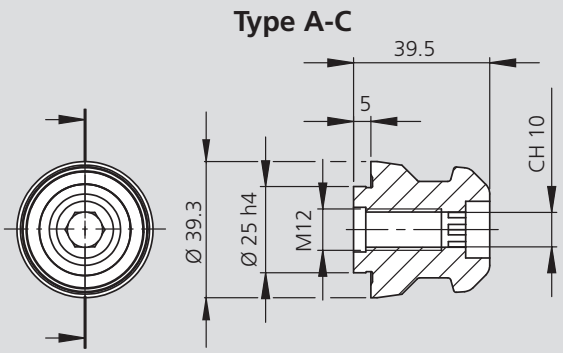

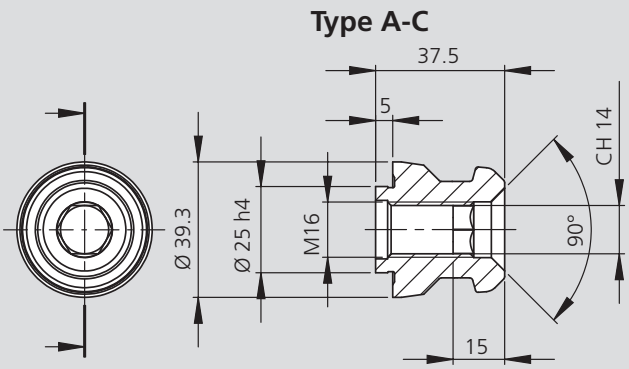

* included in delivery.

Subject to technical changes.

Order review

Type	Thread	Type A Id. No.	Type B Id. No.	Type C Id. No.	Weight [kg]
Clamping pin WPS	M12	46162355	46162356	46162357	0.3
Clamping pin WPS	M16	46162455	46162456	46162457	0.3

Clamping pin WPS for workpieces

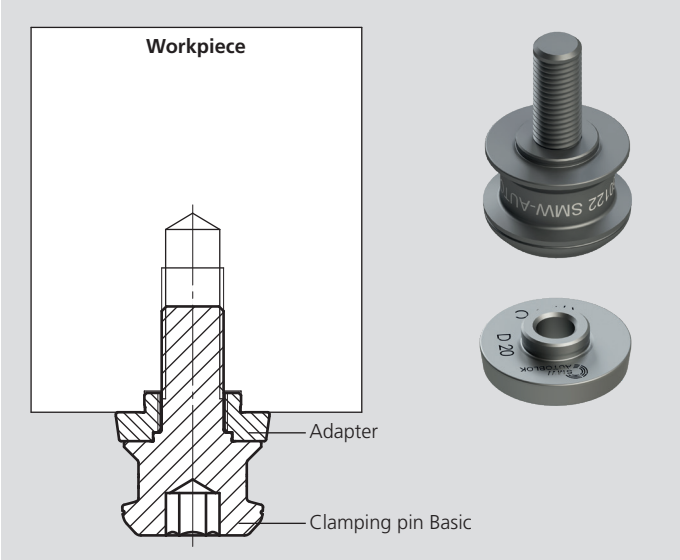

Clamping pins Basic WPS 2-pieces

Clamping pins	Id. No.
Clamping pins Basic M12 (without adapter)	460122
Clamping pins Basic M16 (without adapter)	460123
Clamping pins Basic 7/16" (without adapter)	460108
Clamping pins Basic 5/8" (without adapter)	460109

Adapter

Ø	Type	Id.-No.	Type	Id.-N0.	Type	Id.-No.
18*	A	460124	B	460341	C	460129
20	A	460125	B	460342	C	460130
22	A	460126	B	460343	C	460131
24	A	460127	B	460344	C	460132
25	A	460128	B	460345	C	460133

Centering pin Type A (Standard)
Sword pin Type B (Positioning pin)
Clamping pin Type C (with centering play 0.1 mm)

Clamping pin without shoulder

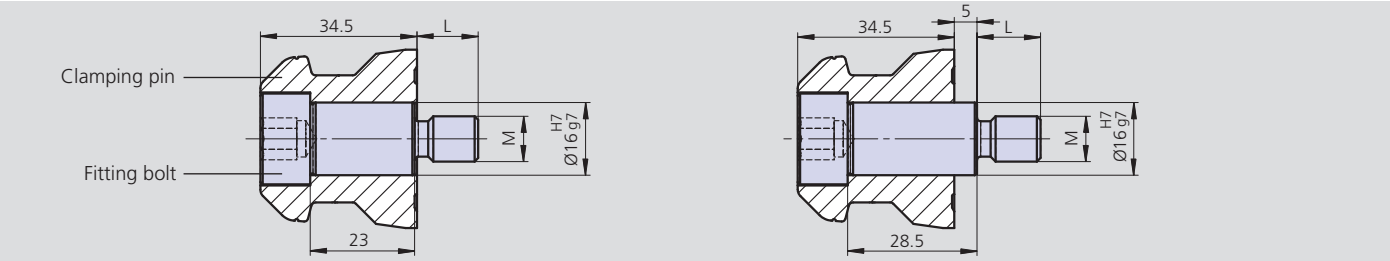

Fitting (10.9) bolt without shoulder

Fitting bolt (10.9) with shoulder

Id. No.	Id. No. Description	M	L
460093	Fitting bolt D16	M10	14
460091	Fitting bolt D16	M12	17
460096	Fitting bolt D16	M16	20
460258	Fitting bolt D16 with shoulder	M10	14
460259	Fitting bolt D16 with shoulder	M12	17
460260	Fitting bolt D16 with shoulder	M16	20
460176	Clamping pin without shoulder Type A	-	-
460208	Clamping pin without shoulder Type C*	-	-

* Centering play 0.1 mm

Interface dimensions for clamping pins in the workpiece

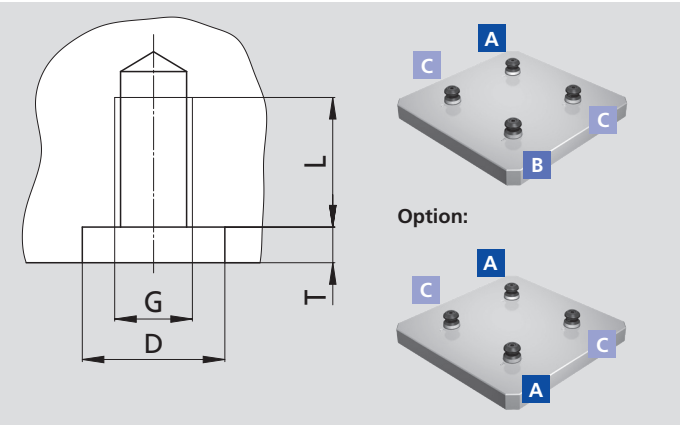

SMW-AUTOBLOK Type	D^{H7}	G	L	$T^{+0.2}$
Clamping pin Basic M12				
Adapter Ø18	18	M12	20	5.5
Adapter Ø20	20	M12	20	5.5
Adapter Ø22	22	M12	20	5.5
Adapter Ø24	24	M12	20	5.5
Adapter Ø25	25	M12	20	5.5
Clamping pin Basic M16				
Adapter Ø20	20	M16	25	5.5
Adapter Ø22	22	M16	25	5.5
Adapter Ø24	24	M16	25	5.5
Adapter Ø25	25	M16	25	5.5

Note: Id. No. clamping pins see page 81.
Please download the 3D data for customer integration from our website www.stationary-workholding.com.

Adaption washer Ø 25h7 on [D] pass diameter

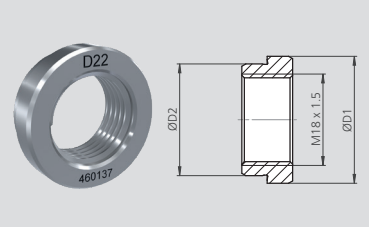

Adaption washer Ø		Id. No.
D1 (h7)	D2 (h7)	
Ø 25	Ø 18	460135
Ø 25	Ø 20	460136
Ø 25	Ø 22	460137
Ø 25	Ø 24	460138
Ø 25	Ø 25	460139

Mounting screws with reduction for WPS installation for the use of M10 and M12 screws

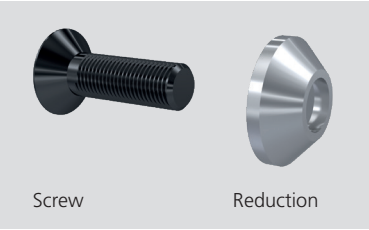

Mounting screw / reduction for M10 and M12	Screw M10	Reduction M10	Screw M12	Reduction M12
WPS height 60 mm, Bolt lenght 40 mm	207780	460206	207779	460207
WPS height 80 mm, Bolt lenght 50 mm	010814	460204	010212	460205
WPS height 100 mm, Bolt lenght 70 mm				
WPS height 160 mm, Bolt lenght 130 mm	019363	460204	010599	460205

Cover plug with O-ring for grid plates

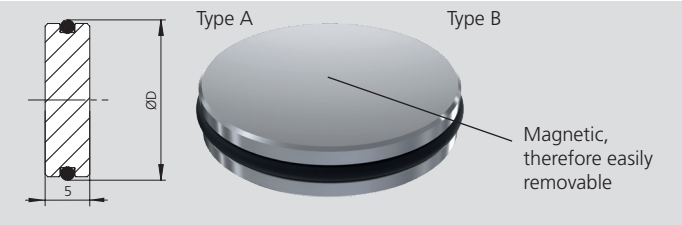

Type	Id. No.
Cover plug D=18	460163
Cover plug D=20	460255
Cover plug D=22	460256
Cover plug D=24	460257
Cover plug D=25	460164

Aluminium threaded plug for grid plates

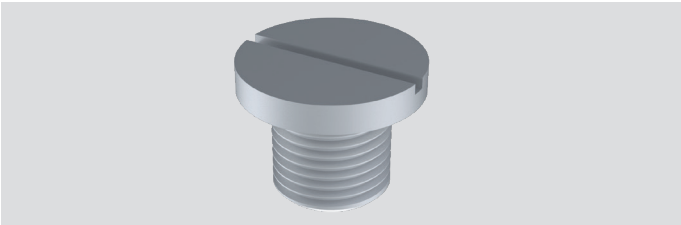

Type	Id. No.
Aluminium threaded plug Ø 25 M16	57602397

Extractor for adapter rings and clamping pin, Id. No. 460250

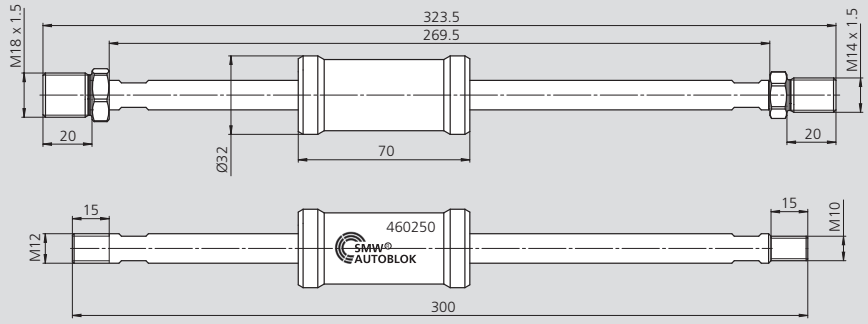

Subject to technical changes.

Extractor	Id. No.
for adapter rings and clamping pins	460250

Reduction D32 for WPS 080

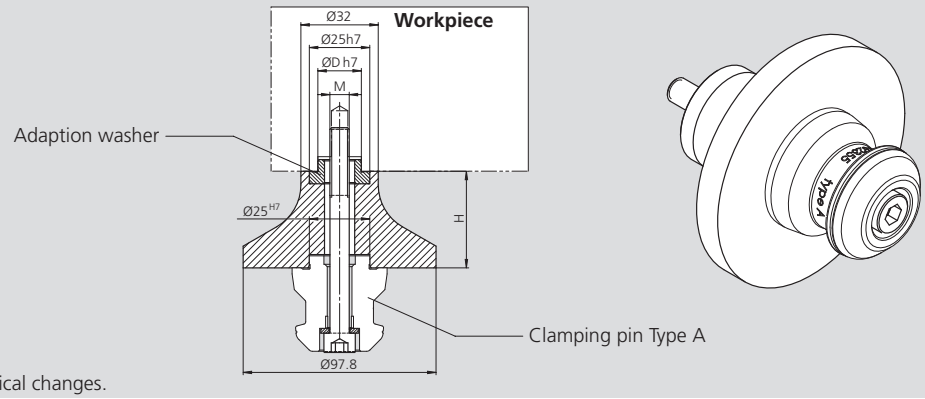

Subject to technical changes.

Reduction Thread [M]	Id. No. Height 40 mm [H]	Id. No. Height 80 mm [H]
M 08	460216	460219
M 10	460217	460220
M 12	460218	460221
M 16	460365	460366

Note: Id. No. Adaption washers from Ø 25h7 to [D] (not included) see page 83

Spacers for WPS modules

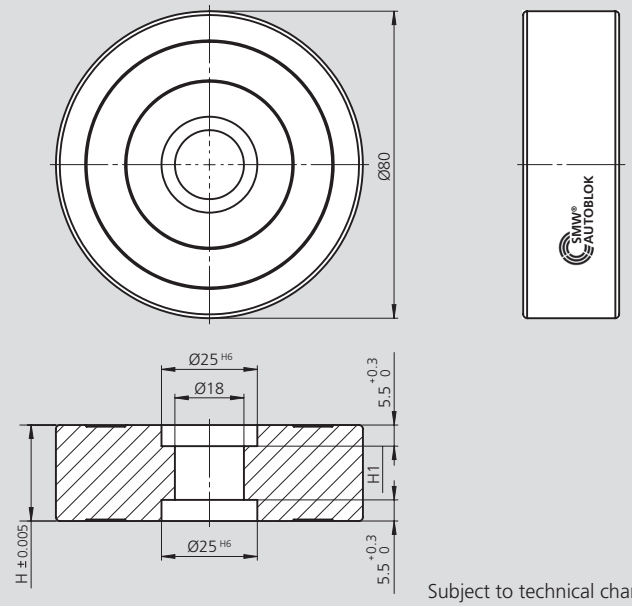

Subject to technical changes.

Example:

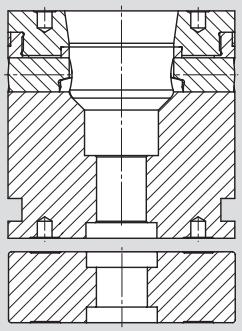

Id. No.	H	H1
460224	10	0
460225	15	4
460226	20	9
460227	25	14
460236	45	34

Attention: Standard mounting bolt can not be used anymore.
Please check for correct thread engagement.

Manual zero point clamping system for workpiece direct clamping

■ Positioning set WPS 080

WPS

Workpiece positioning system

Application/customer benefits

- Simply use of WPS modules on T-slot machine tables
- Easy and high precise grid-free positioning of WPS clamping modules on the machine table
- The positioning set will be mounted on a tool holder provided by the customer

Technical features

- Compatible to all common tool holders
- Positioning of the module ± 0.03 (depending of tool holder)
- The WPS modules may be actuated with max. 2 Nm (instead of 15 Nm) by using the WPS positioning system, otherwise there is a risk of damage!

Standard equipment

Positioning set without tool holder

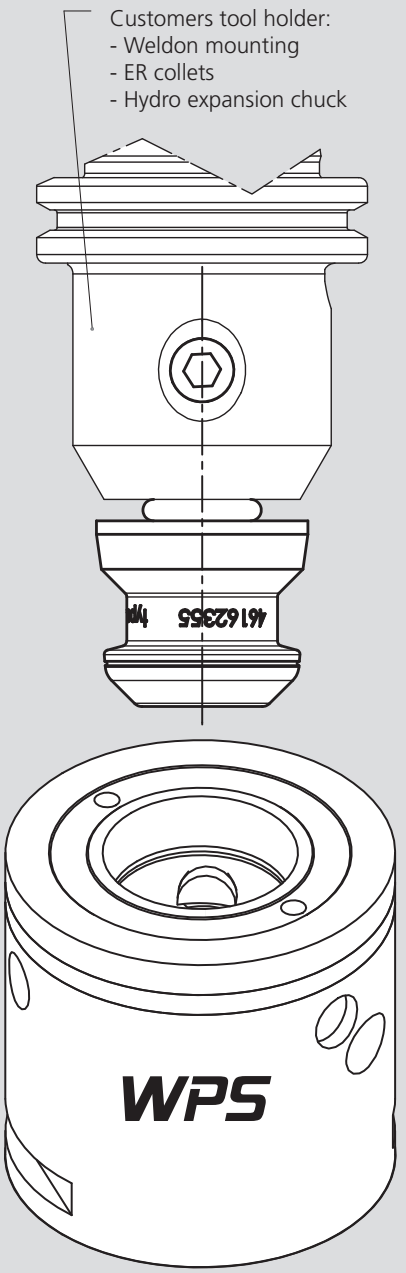

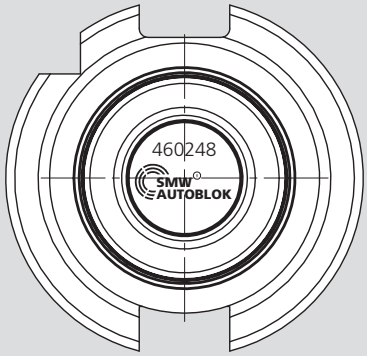

SCHNITT / SECTION A-A

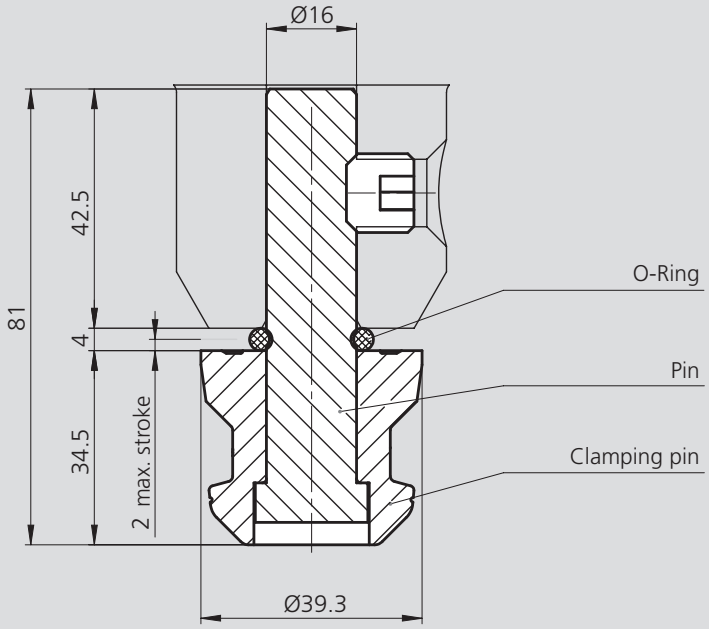

Subject to technical changes.

SMW-AUTOBLOK Type	Id. No.
Positioning-Set WPS 080	460248

WS-210

Workpiece positioning system

Workpiece stabilizer

■ For support of tall workpieces

Workpiece stabilizer with telescope

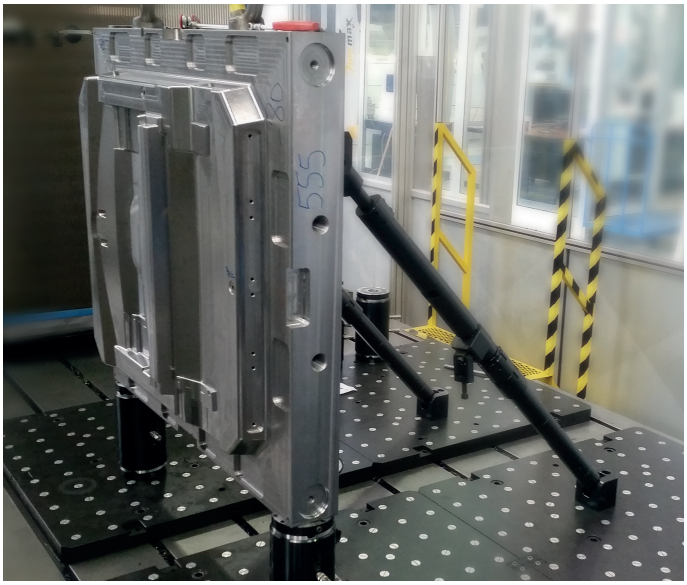

Workpiece stabilizer WS-210

- Stroke 210 mm
- Optional fine adjustment

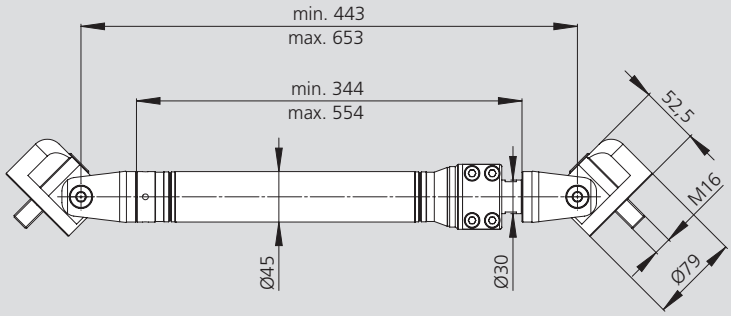

Subject to technical changes.

Workpiece stabilizer WS-210 with extension WSE-208

- max. 2 pcs. of the extensions

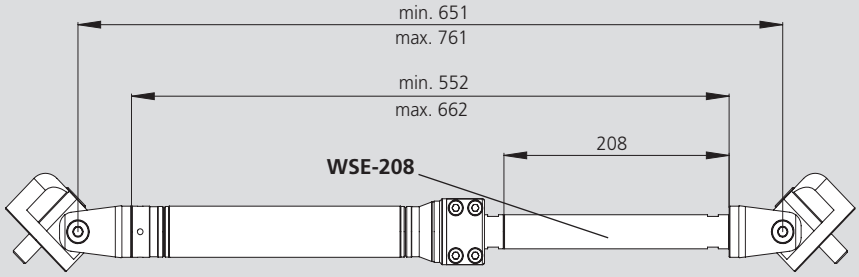

Subject to technical changes.

Workpiece stabilizer WS-210 with fine adjustment WSF-10

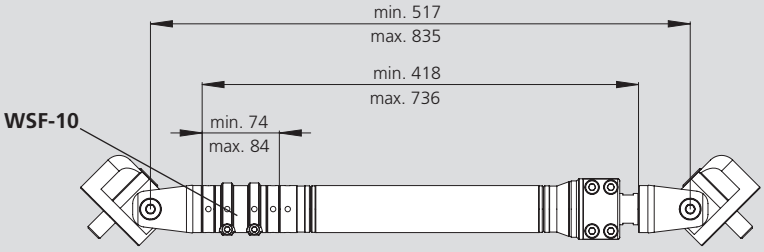

Subject to technical changes.

Type	Id. No.
Workpiece stabilizer WS-210	460395
Extension WSE-208	460354
Fine adjustment WSF-10	460336

Application/customer benefits

- Easy and high-precise positioning of the zero point clamping modules
- Special sizes or customer request versions for maximum distances of the machine available in short time
- Alphanumeric labelling for the definition of the positioning of the clamping modules available on request
- Rust protected by means of phosphating

Technical features

- Grid and holes available as standard or on customer request
- High-quality steel (1.2311/1.2312)
- Standard = phosphating / optional = other surface treatment
- Machine specific holes on request

Grid (in center)

Positioning holes Ø25H7,
thread M12/16

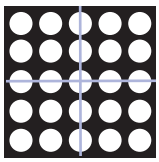

Grid	Length	Width
50 / 100	500	500
50 / 100	600	600
50 / 100	800	800
50 / 100	1000	500
50 / 100	1000	800
50 / 100	1200	800
50 / 100	1000	1000

Special versions on request

Grid (not in center)

Positioning holes Ø25H7,
thread M12/16

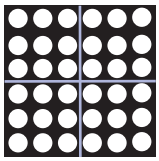

Grid	Length	Width
50 / 100	600	400
50 / 100	500	500
50 / 100	600	500
50 / 100	600	800
50 / 100	1000	500
50 / 100	1000	600
50 / 100	1000	800
50 / 100	1000	1000

Special versions on request

Application examples

WPS

Workpiece positioning system

Customized Grid Plates

■ Request form
■ Simply fill in and send to: contact@stationary-workholding.com

Application/customer benefits

- Easy and high-precise positioning of the zero point clamping modules
- Special sizes or customer request versions for maximum distances of the machine available in short time
- Alphanumeric labelling for the definition of the positioning of the clamping modules available on request
- Rust protected by means of phosphating

Technical features

- Grid and holes on customer request
- High-quality steel (1.2311/1.2312)
- Standard = phosphating / optional = other surface treatment

Standard equipment

Customized grid plates

Customized grid plates

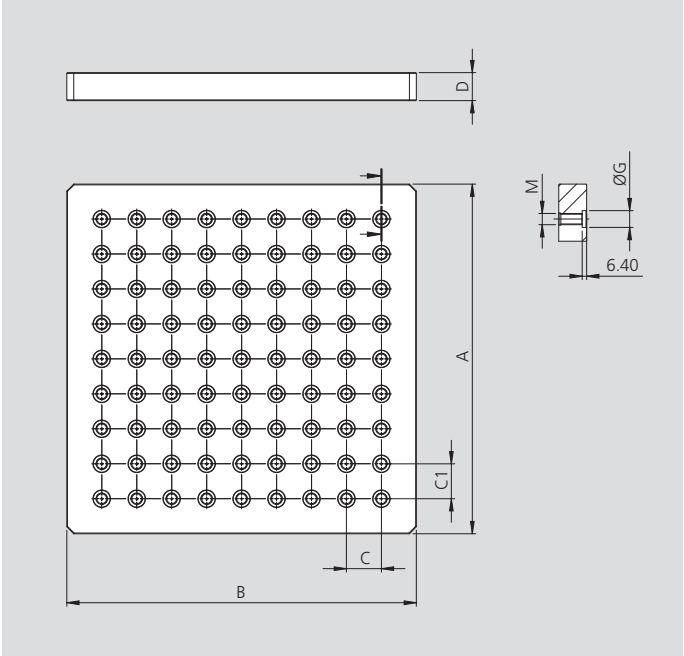

Dimensions		
A	Length	
B	Width	
C	Grid distance 1	
C1	Grid distance 2	
D	Thickness	
M	Thread	
G	Diameter	
Grid in center	Yes / No	

Grid (in center)

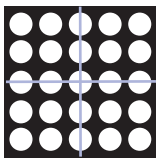

Grid (not in center)

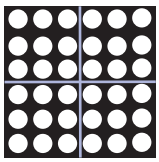

Application/customer benefits

- Simply use of WPS modules on APS zero point clamping system
- Ready to use

Technical features

- Compatible to WPS modules height 060, 080 and 160

Standard equipment

Adapter-set including 3 different mounting screws
M16 for WPS height 060, 080, 160,
clamping pin and adapters (without WPS module)

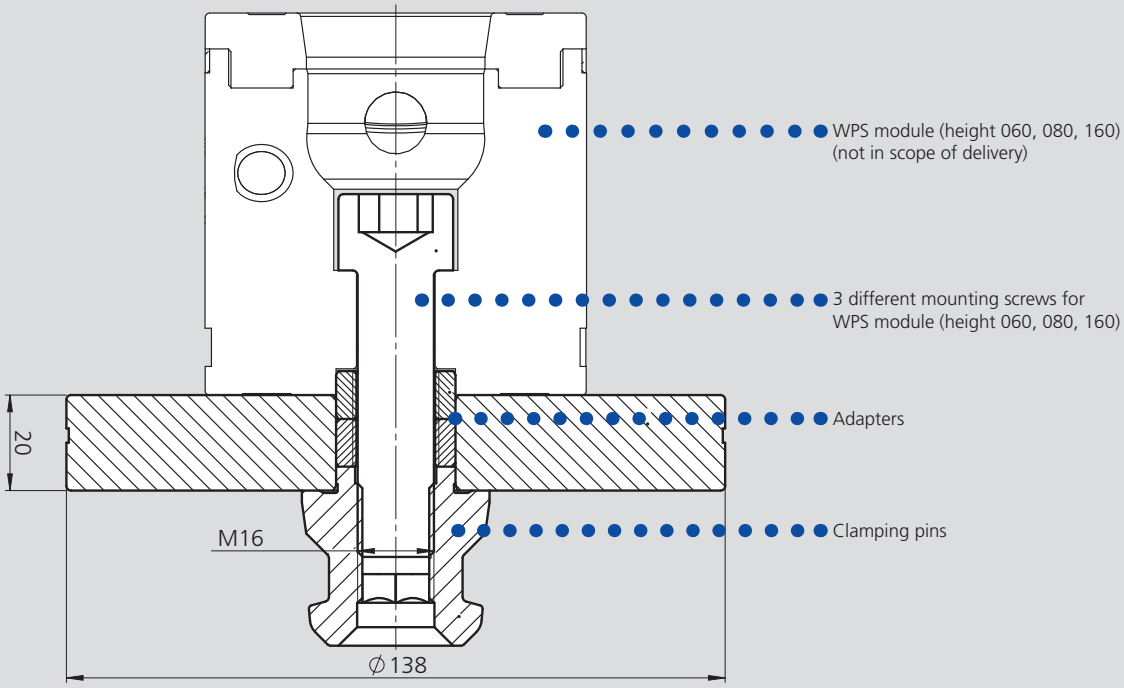

Subject to technical changes.

SMW-AUTOBLOK Type	Id. No.
Adapter-Set WPS 080	460359

WPS-PPD

Workpiece preparation device

- Ideal for OP 10: Preparation of the workpiece for WPS
- Flexible system

Mounting on Grip plate

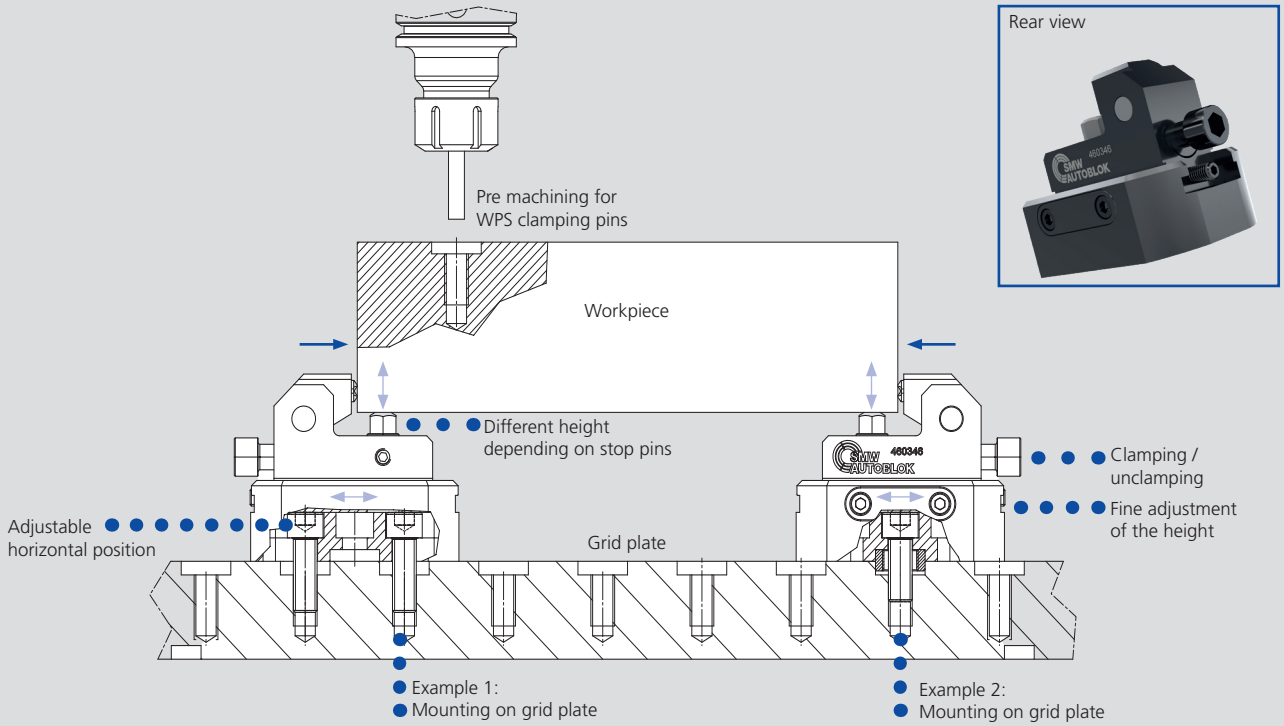

Mounting of a clamping pin for zero point system APS / WPS / ZeroAct:

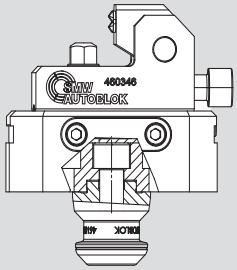

Example 3:
Mounting of clamping pin
(only WPS-PPD 12)

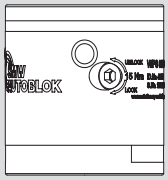

WPS (max height 80 mm)

Interface dimensions for clamping pins in the workpiece

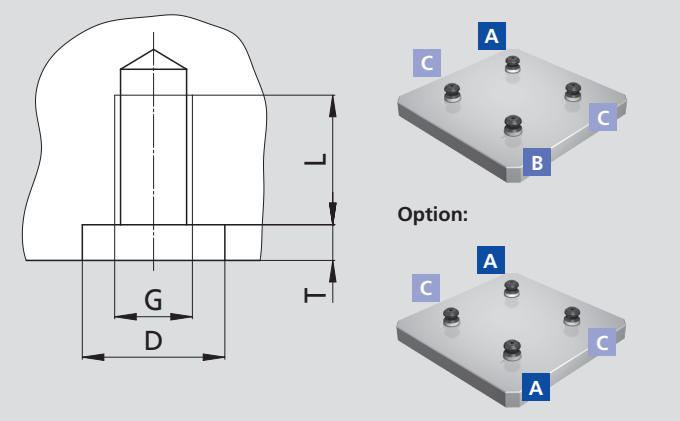

SMW-AUTOBLOK Type	D^{H7}	G	L	$T^{+0.2}$
Clamping pin Basic M12				
Adapter Ø18	18	M12	20	5.5
Adapter Ø20	20	M12	20	5.5
Adapter Ø22	22	M12	20	5.5
Adapter Ø24	24	M12	20	5.5
Adapter Ø25	25	M12	20	5.5
Clamping pin Basic M16				
Adapter Ø20	20	M16	25	5.5
Adapter Ø22	22	M16	25	5.5
Adapter Ø24	24	M16	25	5.5
Adapter Ø25	25	M16	25	5.5

Note: Id. No. clamping pins see page 81
Please download the 3D data for customer integration from our website www.stationary-workholding.com.

Workpiece preparation device

WPS-PPD

- Ideal for OP 10: Preparation of the workpiece for WPS
- Flexible system

Application examples

Option 1: Clamping centrical

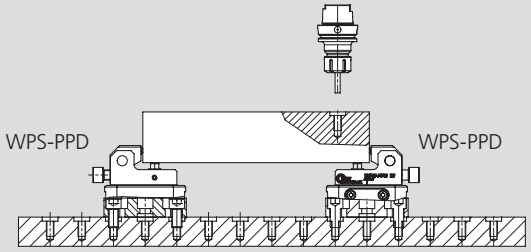

Option 2: Clamping centrical with pendulum

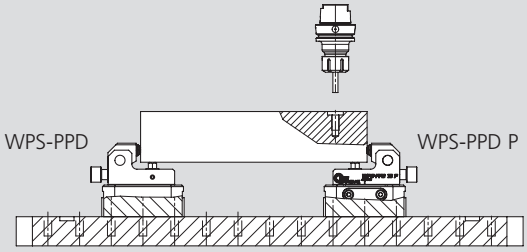

Option 3: Clamping against fixed stop

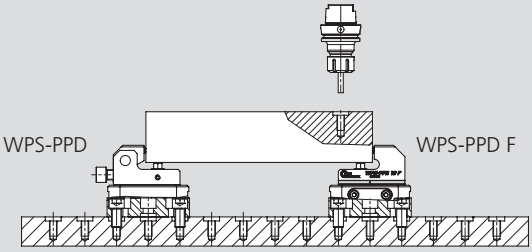

Option 4: Clamping against fixed stop with pendulum

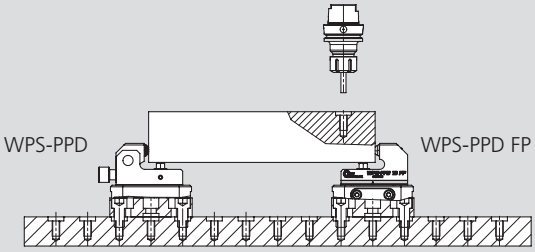

Pendulum feature WPS-PPD P and FP

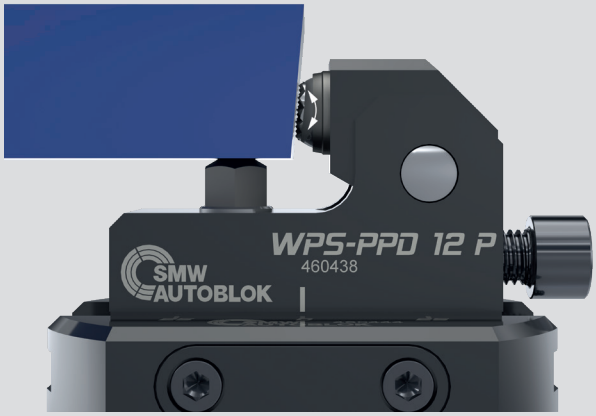

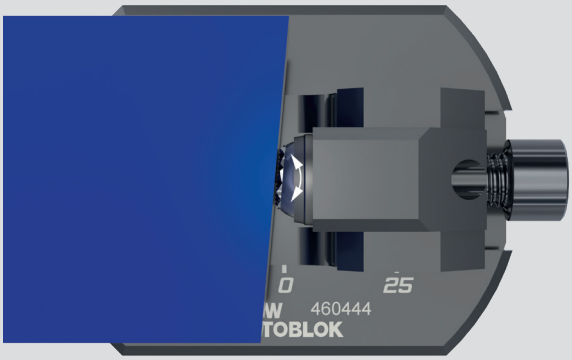

- Due to the integrades pendulum mechanism, the clamping position adjusts itself to the workpiece geometry automatically.
- Therefore, also not angular worpiece areas can be also clamped fast and safe.
- Thanks to 4 different pendulum inserts, the clamping devices can be used very flexible.

WPS-PPD 12

Workpiece preparation device

- **Ideal for OP 10: Preparation of the workpiece for WPS**
- **Flexible system**

Application/customer benefits

- Ideal for OP 10: Preparation of the workpiece for WPS
- Very strong and compact design for best accessibility
- Clamping height of the workpiece adjustable
- Easy and flexible mounting
- Direct interface for grid dimension 40 / 50 mm and interface for zero point system APS / WPS / ZeroAct as a standard

Technical features

- Manual actuation (SW 10)
- Horizontal position adjustable (0 - 50 mm)
- Position lockable clamping
- Pull-down effect
- Clamping force up to 20 kN (40 Nm)
- Different heights for the workpiece support by means of different stop pins
- Fine adjustment of the clamping height (0 - 5 mm)

Standard equipment

WPS-PPD with UGE Grip insert - carbide without stop pin

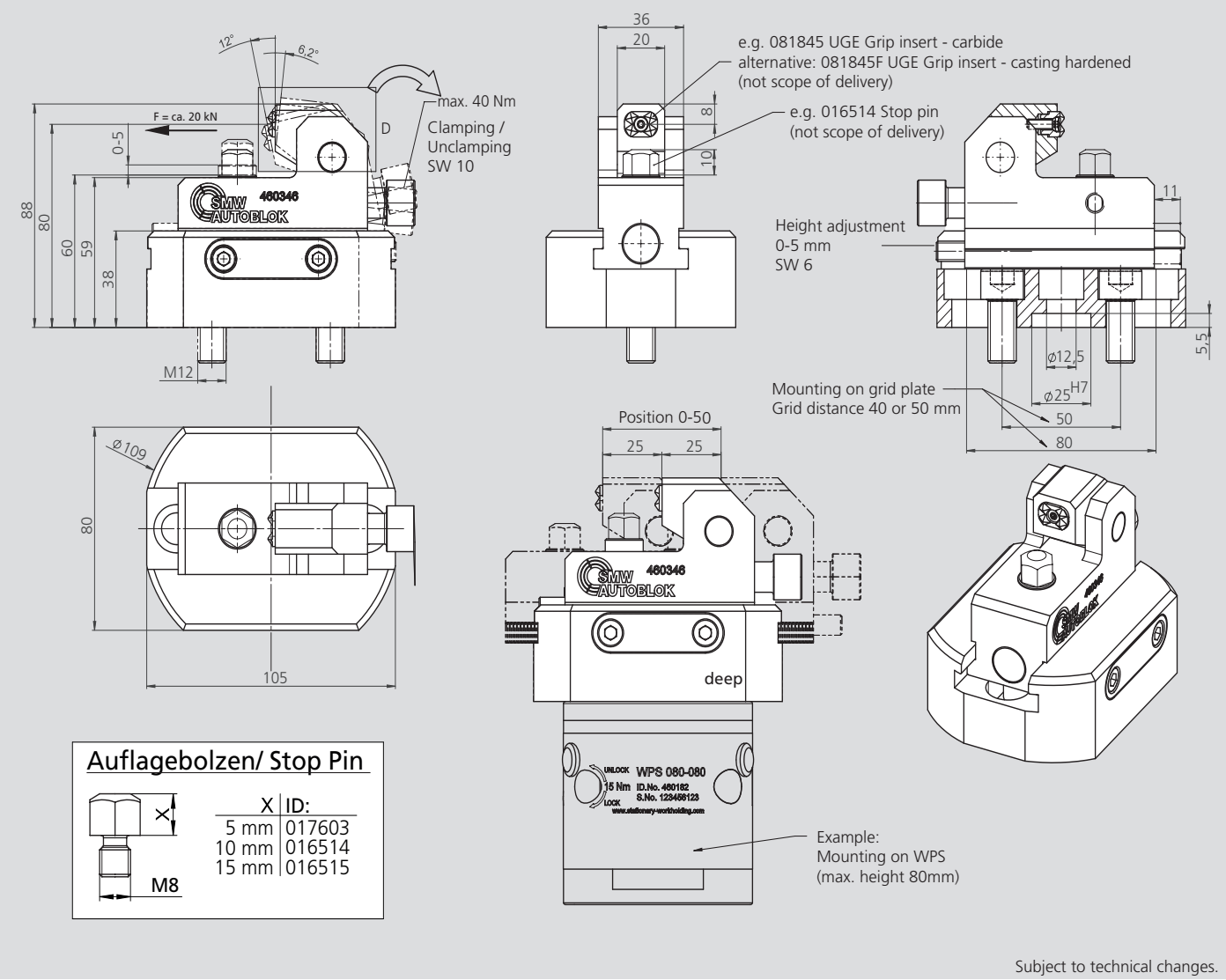

Auflagebolzen/ Stop Pin

X	ID:
5 mm	017603
10 mm	016514
15 mm	016515

Subject to technical changes.

Order review

Type		Id. No.
WPS-PPD 12 Workpiece preparation device		460346
Stop Pin ALB	5 mm	017603
Stop Pin ALB	10 mm	016514
Stop Pin ALB	15 mm	016515
UGE Grip Insert	casting hardened	081845F

Workpiece preparation device with pendulum

WPS-PPD 12 P

- Ideal for OP 10: Preparation of the workpiece for WPS
- Flexible system

Application/customer benefits

- Ideal for OP 10: Preparation of the workpiece for WPS
- Very strong and compact design for best accessibility
- Clamping height of the workpiece adjustable
- Easy and flexible mounting
- Direct interface for grid dimension 40 / 50 mm and interface for zero point system APS / WPS / ZeroAct as a standard

Technical features

- Manual actuation (SW 10)
- Horizontal position adjustable (0 - 50 mm)
- Position lockable clamping
- Pull-down effect
- Pendulum angle of the inserts: ± 9°
- Clamping force up to 20 kN (40 Nm)
- Different heights for the workpiece support by means of different stop pins
- Fine adjustment of the clamping height (0 - 5 mm)

Standard equipment

WPS-PPD 12 P without pendulum inserts and stop pin

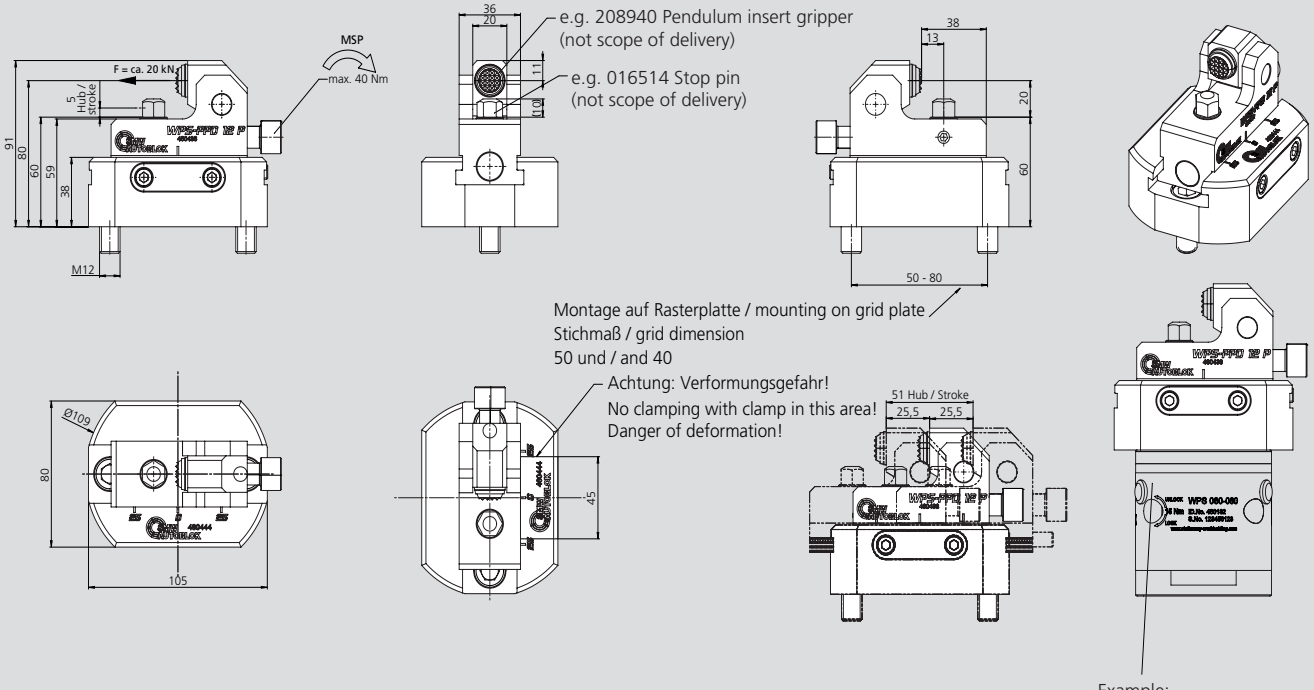

Auflagebolzen / Stop Pin

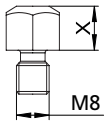

X	ID:
5 mm	017603
10 mm	016514
15 mm	016515

Pendeleinsätze / pendulum inserts

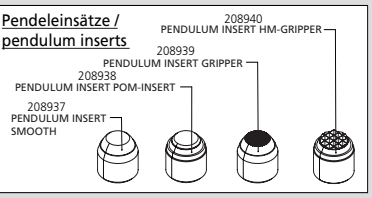

Subject to technical changes.

Order review

Type		Id. No.
WPS-PPD 12 P Workpiece preparation device (with pendulum)		460430
Stop Pin ALB	5 mm	017603
Stop Pin ALB	10 mm	016514
Stop Pin ALB	15 mm	016515
Pendulum insert smooth		208937
Pendulum insert POM-Insert		208938
Pendulum insert gripper		208939
Pendulum insert HM-Gripper		208940

WPS-PPD 12 F/FP

Workpiece preparation device - fixed stop

- Ideal for OP 10: Preparation of the workpiece for WPS
- Flexible system

Application/customer benefits

- F: Fixed stop without pendulum
- FP: Fixed stop with pendulum
- Ideal for OP 10: Preparation of the workpiece for WPS
- Very strong and compact design for best accessibility
- Clamping height of the workpiece adjustable
- Easy and flexible mounting
- Direct interface for grid dimension 40 / 50 mm and interface for zero point system APS / WPS / ZeroAct as a standard

Technical features

- Manual actuation (SW 10)
- Horizontal position adjustable (0-50 mm)
- Position lockable clamping
- Pull-down effect
- Pendulum angle of the inserts: ± 9°
- Different heights for the workpiece support by means of different stop pins
- Fine adjustment of the clamping height (0-5 mm)

Standard equipment

WPS-PPD 12 F with UGE Grip insert hard metal, without stop pin
WPS-PPD 12 FP without pendulum inserts and stop pin

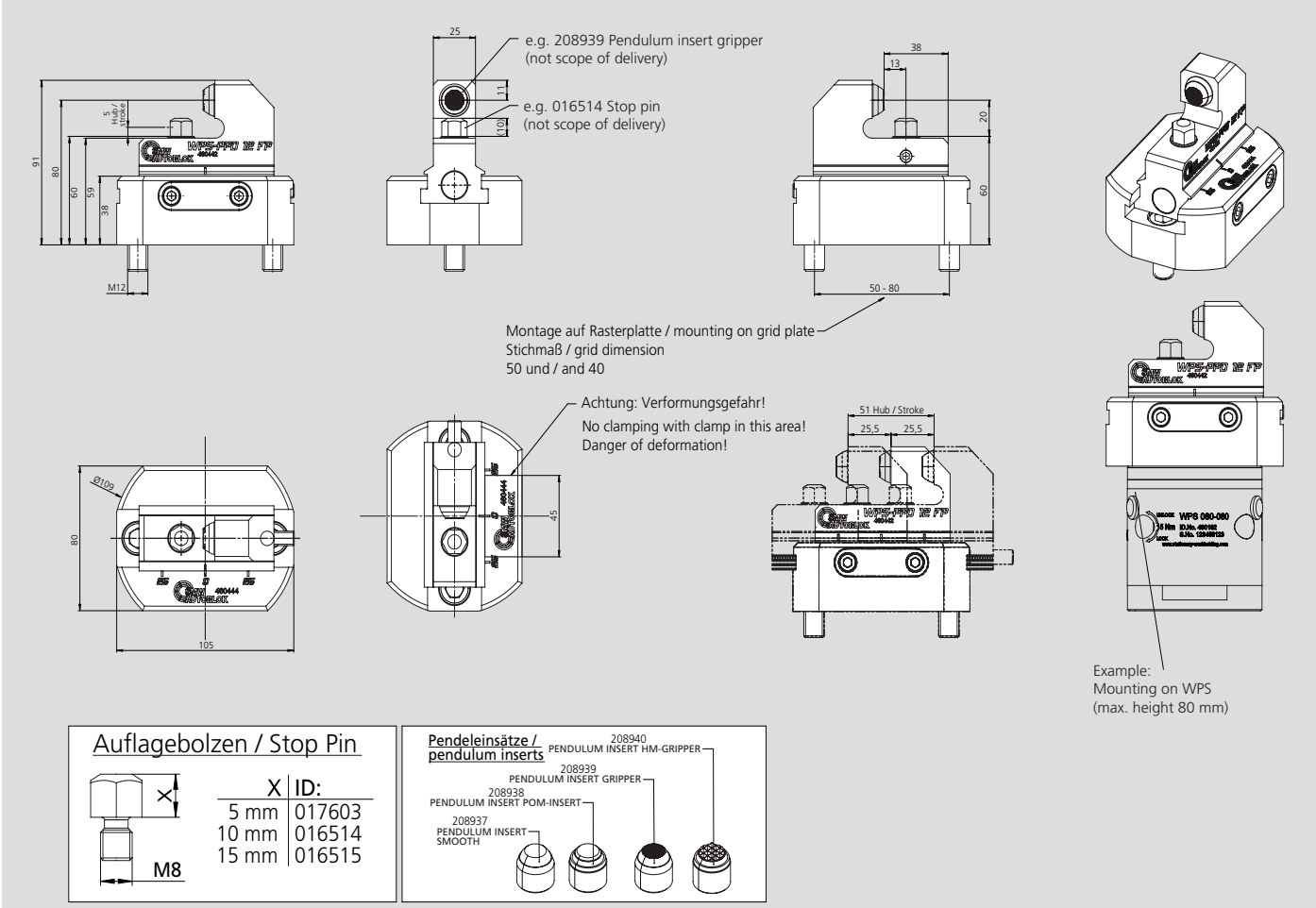

Subject to technical changes.

Order review

Type		Id. No.
WPS-PPD 12 F Workpiece preparation device (w/o pendulum)	UGE Grip insert HM scope of delivery	460432
WPS-PPD 12 FP Workpiece preparation device (with pendulum)		460434
Stop Pin ALB	5 mm	017603
Stop Pin ALB	10 mm	016514
Stop Pin ALB	15 mm	016515
Pendulum insert smooth		208937
Pendulum insert POM-Insert		208938
Pendulum insert gripper		208939
Pendulum insert HM-Gripper		208940
UGE Grip insert	casting hardened	081845F

Workpiece preparation device

WPS-PPD 16

- Ideal for OP 10: Preparation of the workpiece for WPS
- Flexible system

Application/customer benefits

- Ideal for OP 10: Preparation of the workpiece for WPS
- Very strong and compact design for best accessibility
- Clamping height of the workpiece adjustable
- Easy and flexible mounting
- Direct interface for grid dimension 40 / 50 mm and interface for zero point system APS / WPS / ZeroAct as a standard

Technical features

- Manual actuation (SW 14)
- Horizontal position adjustable (0 - 50 mm)
- Position lockable clamping
- Pull-down effect
- Clamping force up to 30 kN (65 Nm)
- Different heights for the workpiece support by means of different stop pins
- Fine adjustment of the clamping height (0 - 7 mm)

Standard equipment

WPS-PPD 16 with UGE Grip insert - carbide without stop pin

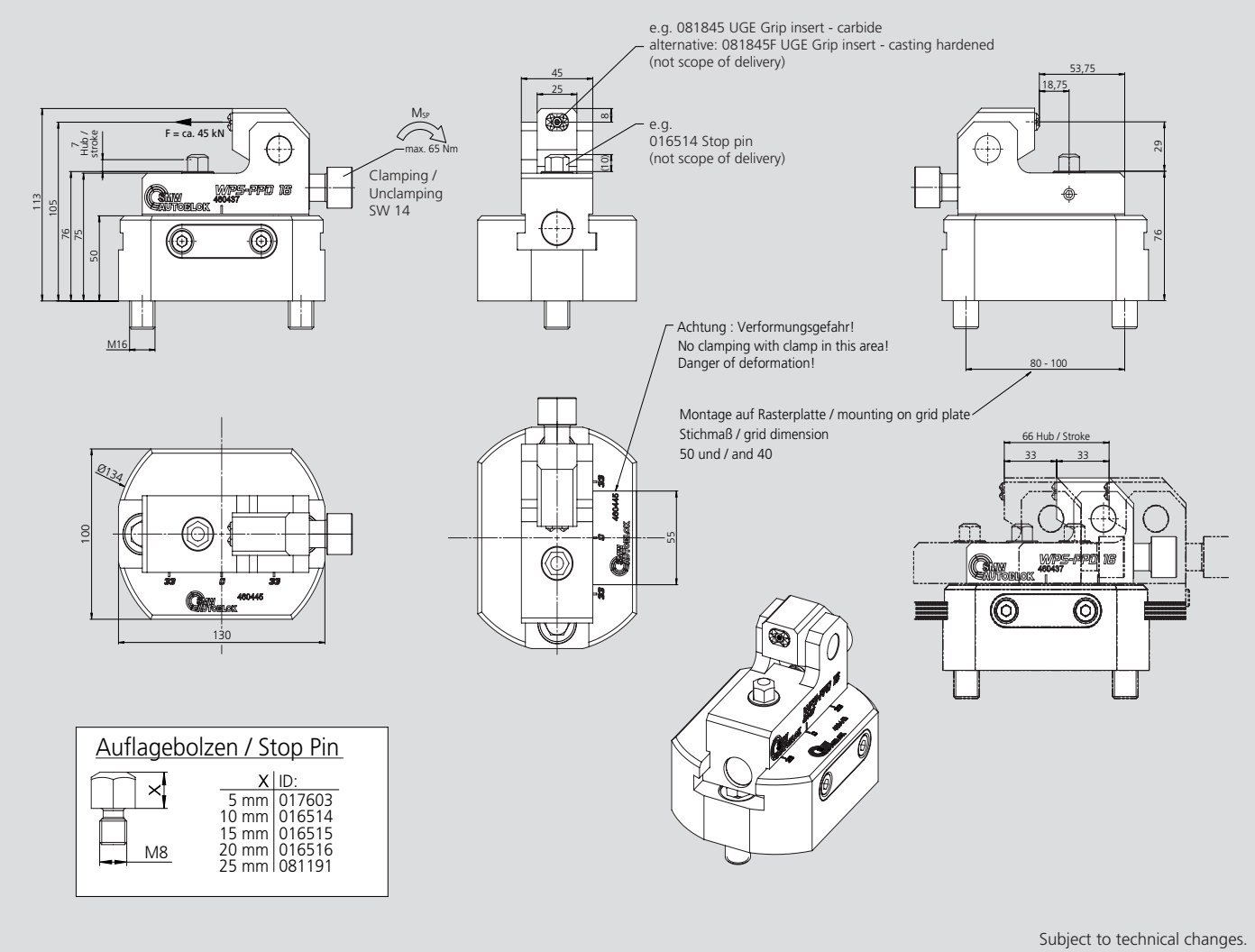

Subject to technical changes.

Order review

Type		Id. No.
WPS-PPD16 Workpiece preparation device		460400
Stop Pin ALB	5 mm	017603
Stop Pin ALB	10 mm	016514
Stop Pin ALB	15 mm	016515
Stop Pin ALB	20 mm	016516
Stop Pin ALB	25 mm	081191
UGE Grip insert	casting hardened	081845F

WPS-PPD 16 P

Workpiece preparation device with pendulum

■ Ideal for OP 10: Preparation of the workpiece for WPS
■ Flexible system

Application/customer benefits

- Ideal for OP 10: Preparation of the workpiece for WPS
- Very strong and compact design for best accessibility
- Clamping height of the workpiece adjustable
- Easy and flexible mounting
- Direct interface for grid dimension 40 / 50 mm and interface for zero point system APS / WPS / ZeroAct as a standard

Technical features

- Manual actuation (SW 14)
- Horizontal position adjustable (0 - 50 mm)
- Position lockable clamping
- Pull-down effect
- Pendulum angle of the inserts: ± 9°
- Clamping force up to 30 kN (65 Nm)
- Different heights for the workpiece support by means of different stop pins
- Fine adjustment of the clamping height (0 - 7 mm)

Standard equipment

WPS-PPD 16 P without pendulum inserts and stop pin

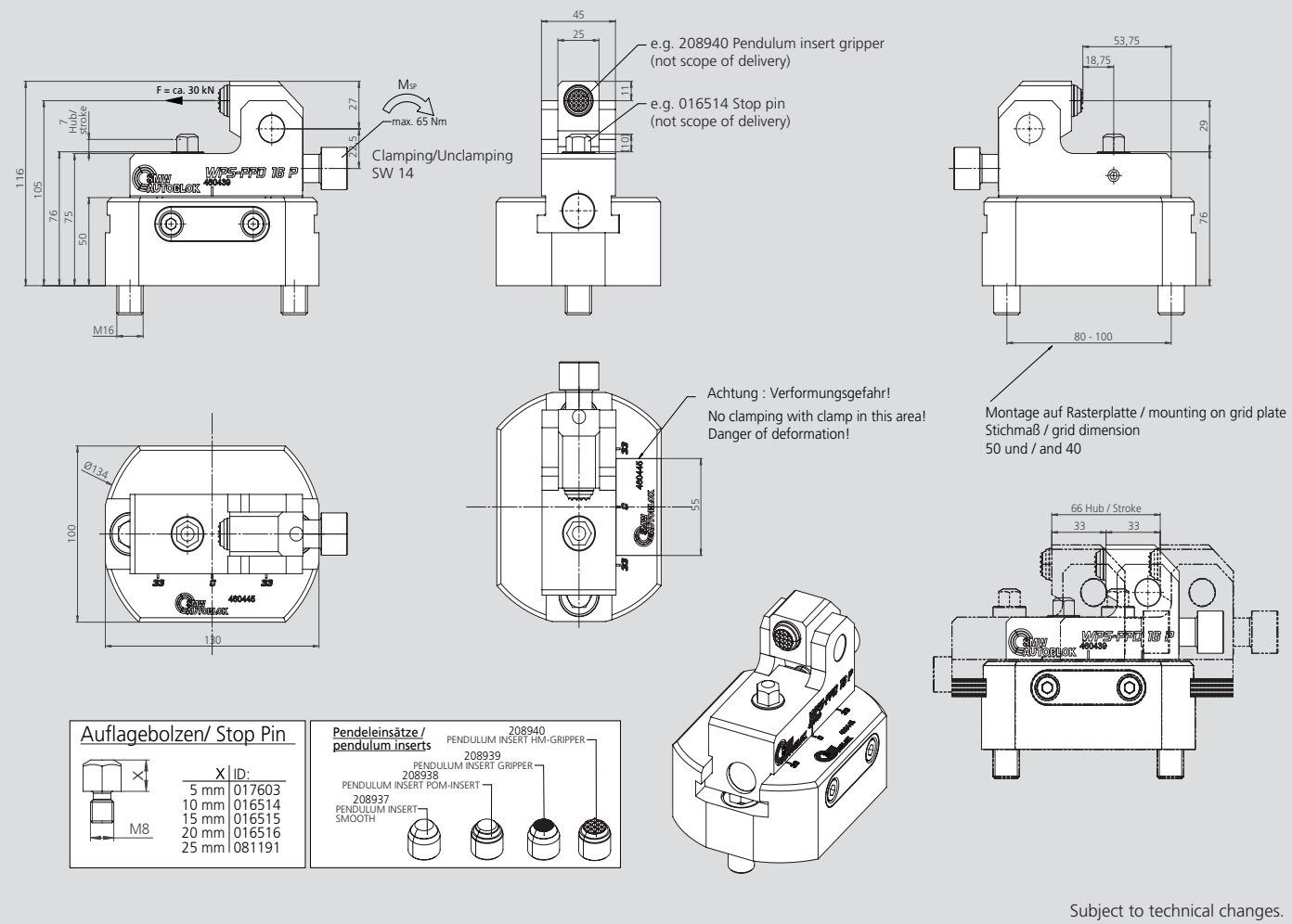

Subject to technical changes.

Order review

Type		Id. No.
WPS-PPD 16 P Workpiece preparation device		460431
Stop Pin ALB	5 mm	017603
Stop Pin ALB	10 mm	016514
Stop Pin ALB	15 mm	016515
Stop Pin ALB	20 mm	016516
Stop Pin ALB	25 mm	081191
Pendulum insert smooth		208937
Pendulum insert POM-Insert		208938
Pendulum insert gripper		208939
Pendulum insert HM-Gripper		208940

Workpiece preparation device - fixed stop

WPS-PPD 16 F/FP

- Ideal for OP 10: Preparation of the workpiece for WPS
- Flexible system

Application/customer benefits

- F: Fixed stop without pendulum
- FP: Fixed stop with pendulum
- Ideal for OP 10: Preparation of the workpiece for WPS
- Very strong and compact design for best accessibility
- Clamping height of the workpiece adjustable
- Easy and flexible mounting
- Direct interface for grid dimension 40 / 50 mm and interface for zero point system APS / WPS / ZeroAct as a standard

Technical features

- Manual actuation (SW 14)
- Horizontal position adjustable (0 - 50 mm)
- Position lockable clamping
- Pull-down effect
- Pendulum angle of the inserts: ± 9°
- Different heights for the workpiece support by means of different stop pins
- Fine adjustment of the clamping height (0 - 7 mm)

Standard equipment

WPS-PPD 16 F with grip insert hard metal, without stop pin
WPS-PPD 16 FP without pendulum inserts and stop pin

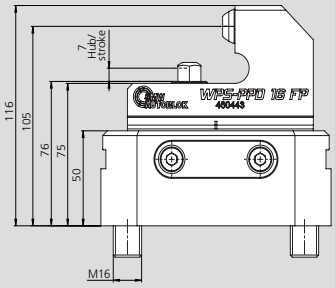

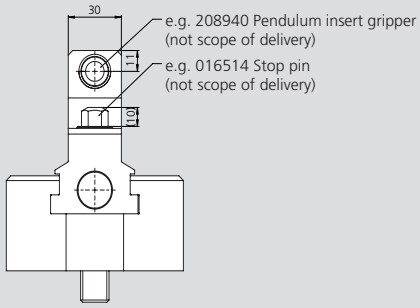

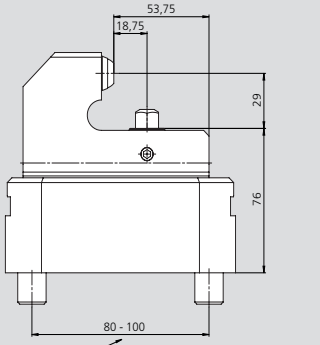

Montage auf Rasterplatte / mounting on grid plate
Stichmaß / grid dimension
50 und / and 40

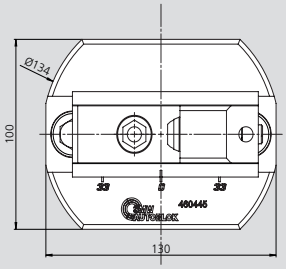

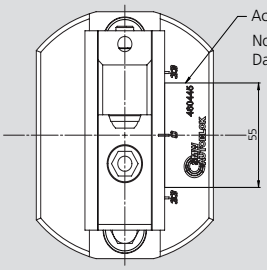

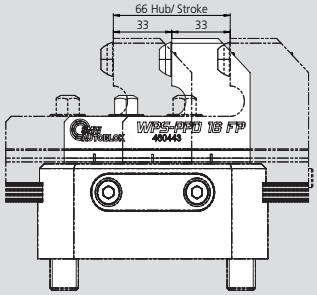

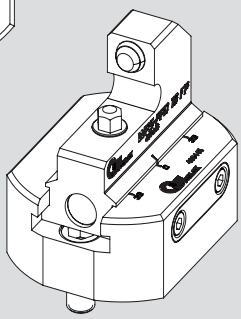

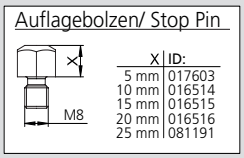

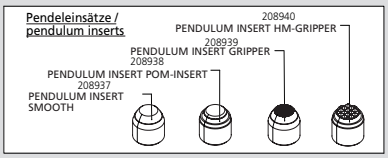

Subject to technical changes.

Order review

Type		Id. No.
WPS-PPD 16 F Workpiece preparation device (w/o pendulum)	UGE Grip insert HM scope of delivery	460433
WPS-PPD 16 FP Workpiece preparation device (with pendulum)		460435
Stop Pin ALB	5 mm	017603
Stop Pin ALB	10 mm	016514
Stop Pin ALB	15 mm	016515
Stop Pin ALB	20 mm	016516
Stop Pin ALB	25 mm	081191
Pendulum insert smooth		208937
Pendulum insert POM-Insert		208938
Pendulum insert gripper		208939
Pendulum insert HM-Gripper		208940
UGE Grip insert	casting hardened	081845F

WPS-PPD

Clamping bar for WPS-PPD

- Ideal for OP 10: Preparation of the workpiece for WPS
- Flexible system

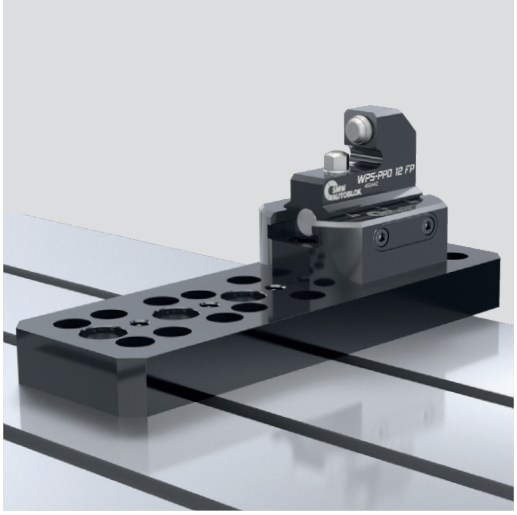

Application/customer benefits

- Easy and flexible use of WPS-PPD direct clamping devices
- Fine adjustment on T-slot tables
- Mounting of WPS-PPD on grid plates between two row of holes possible
- Protected against corrosion
- Very strong version
- Undrilled version for customized finish machining

Technical features

- Dimensions 100 x 300 mm
- Height 30 mm

Standard equipment

Clamping bar WPS-PPD

Options:

Clamping bar WPS-PPD (drilled)

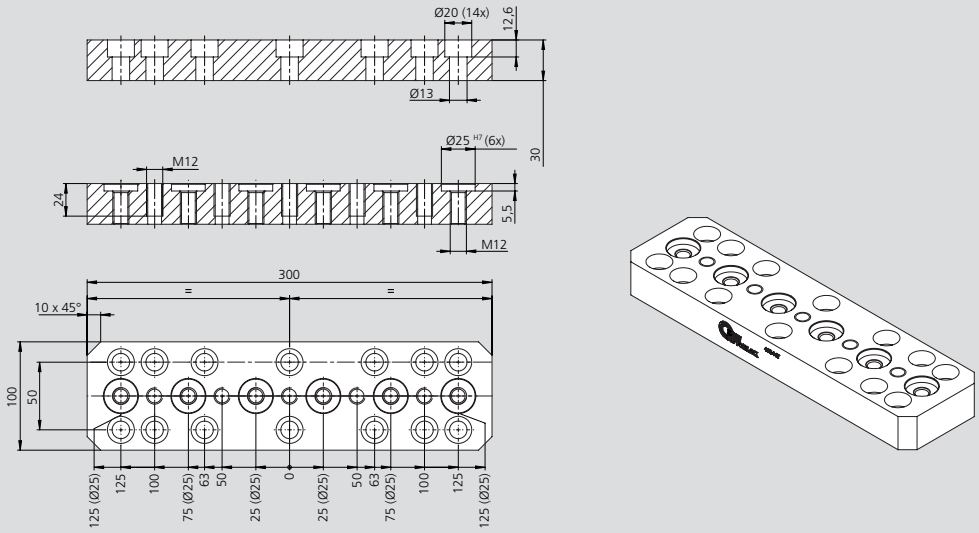

Subject to technical changes.

Clamping bar WPS-PPD (undrilled)

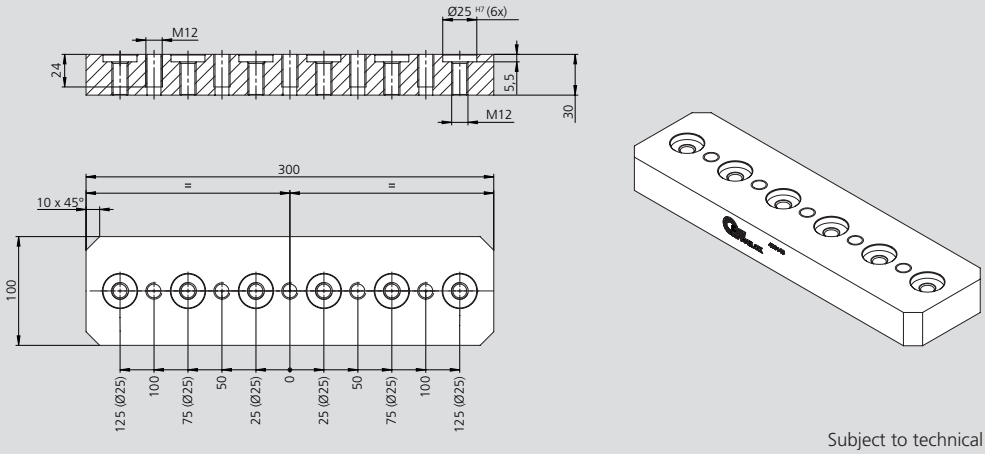

Subject to technical changes.

Order review

Type	Id. No.
Clamping bar WPS-PPD (drilled)	460447
Clamping bar WPS-PPD (undrilled)	460448

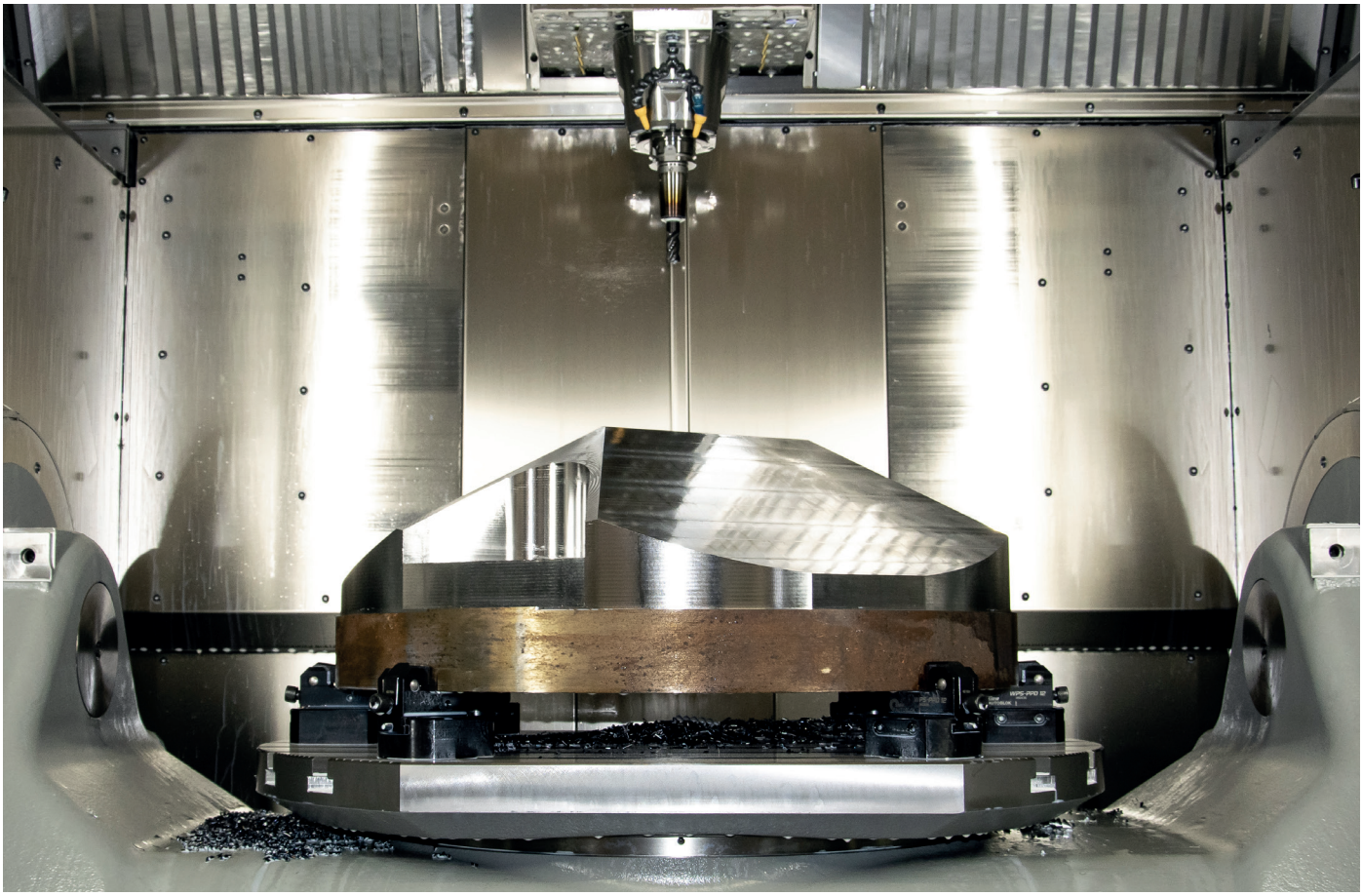

WPS Mini - workpiece

Clamping workpiece

Clamping pin WPS Mini

Clamping pin	Id.-No.
Clamping pin WPS Mini	460399

WPS Mini flange module

Clamping pin M10
for mounting flange module on WPS 080
Id.-No. 467008

Clamping module Ø80
Height 60 mm, Id. No. 460181
Height 80 mm, Id. No. 460182
Height 160 mm, Id. No. 460183

Clamping module with flange
Height 40 mm
Id. No. 460180

positioning system

Clamping workpiece

Reduction Ø 20

Detail description see page 104

Further WPS Mini clamping modules Ø 40 mountable on top

Height 40 mm, Id.-No. 460396

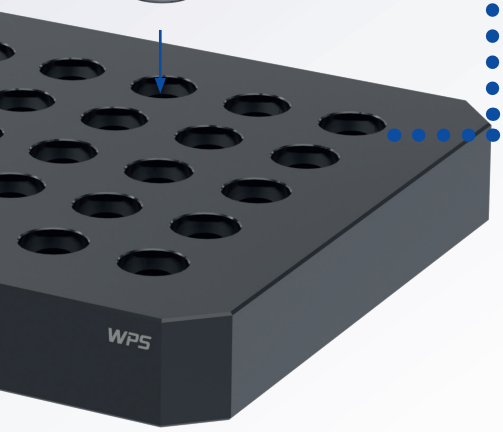

Grid plates (examples)

Grid 50 and 100 mm
Material 1.2311/1.2312

Grid (in center)

Positioning holes Ø12H6, thread M10

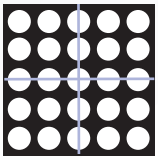

Grid	Length	Width
50 / 100	500	500
50 / 100	600	600
50 / 100	800	800
50 / 100	1000	500
50 / 100	1000	800
50 / 100	1200	800
50 / 100	1000	1000

Special versions on request.

Grid (not in center)

Positioning holes Ø12H6, thread M10

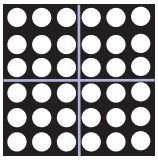

Grid	Length	Width
50 / 100	600	400
50 / 100	500	500
50 / 100	600	500
50 / 100	600	800
50 / 100	1000	500
50 / 100	1000	600
50 / 100	1000	800
50 / 100	1000	1000

Special versions on request.

WPS Mini

Workpiece positioning system

Flange module

- Single quick-actuation for the rapid opening and closing
- Fully sealed

Application/customer benefits

- Huge reduction of set-up times for highest efficiency
- Safe workpiece clamping with maximum holding forces and highest repeatability
- Ideal for 5-axis machining
- Central quick actuation (270° rotation)
- Flexible configurations for customized use
- To adapt WPS Mini on WPS 080

Technical features

- Diameter 80 / 40 mm, Height 40 mm
- Pull-in force 2.5 kN
- Max. torque 10 Nm
- Repeatability < 0.005 mm
- Holding force 25 kN (mounting screw M10 - 12.9)
- **proofline®** = fully sealed - low maintenance

Subject to technical changes.

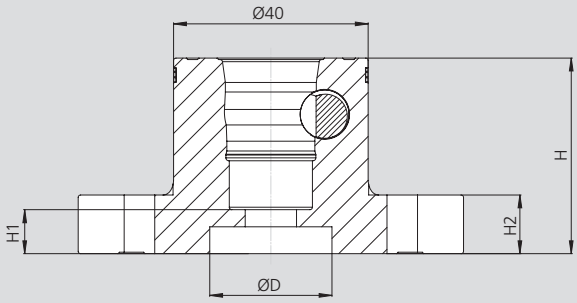

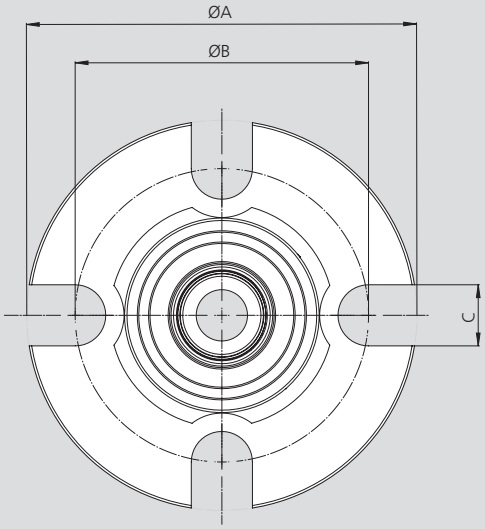

Technical data

SMW-AUTOBLOK Type	WPS Mini 040 460485
A	80
B	60
C	12.5
D / Depth	Ø 25H6 / 5.5
H	40 ± 0.005
H1	9
H2	12
Pull-in force (kN)	2,5
Repeatability (mm)	< 0.005
Holding force (kN) clamping pin M10	16
Holding force (kN) clamping pin M8	10

Clamping module

- Single quick-actuation for the rapid opening and closing
- Fully sealed

WPS Mini

Workpiece positioning system

proofline® series
fully sealed – low maintenance

Application/customer benefits

- Huge reduction of set-up times for highest efficiency
- Safe workpiece clamping with maximum holding forces and highest repeatability
- Ideal for 5-axis machining
- Central quick actuation (270° rotation)
- Flexible configurations for customized use
- Interchangeable to the zero point system WPS by using flange module

Technical features

- Diameter 80 / 40 mm, Height 40 mm
- Pull-in force 2.5 kN
- Max. torque 10 Nm
- Repeatability < 0.005 mm
- Holding force 25 kN (mounting screw M10 - 12.9)
- **proofline®** = fully sealed - low maintenance

Subject to technical changes.

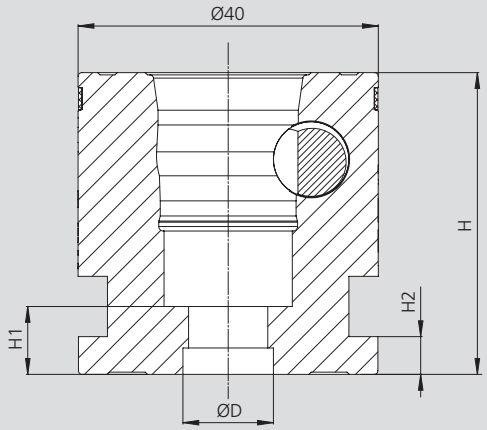

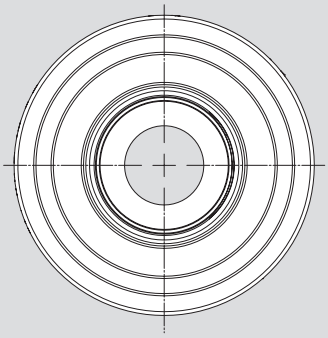

Technical data

SMW-AUTOBLOK Type	WPS Mini 040-040 460396
A	-
B	-
C	-
D / Depth	ø 25H6 / 5.5
H	40 ± 0.005
H1	9
H2	12
Pull-in force (kN)	2,5
Repeatability (mm)	< 0.005
Holding force (kN) clamping pin M10	16
Holding force (kN) clamping pin M8	10

Clamping pin for WPS Mini

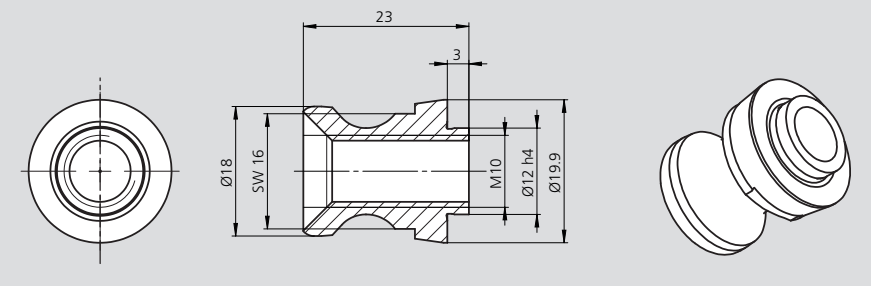

Subject to technical changes.

Clamping pin	Id. No.
Type A for WPS Mini	460399
Type B for WPS Mini	467145
Type C for WPS Mini	467146

Clamping pin for WPS 080 M10

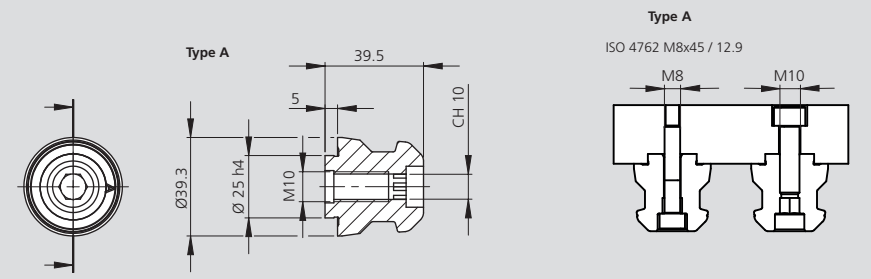

Subject to technical changes.

Clamping pin	Id. No.
for WPS 080	467008

Reduction D20 for WPS Mini

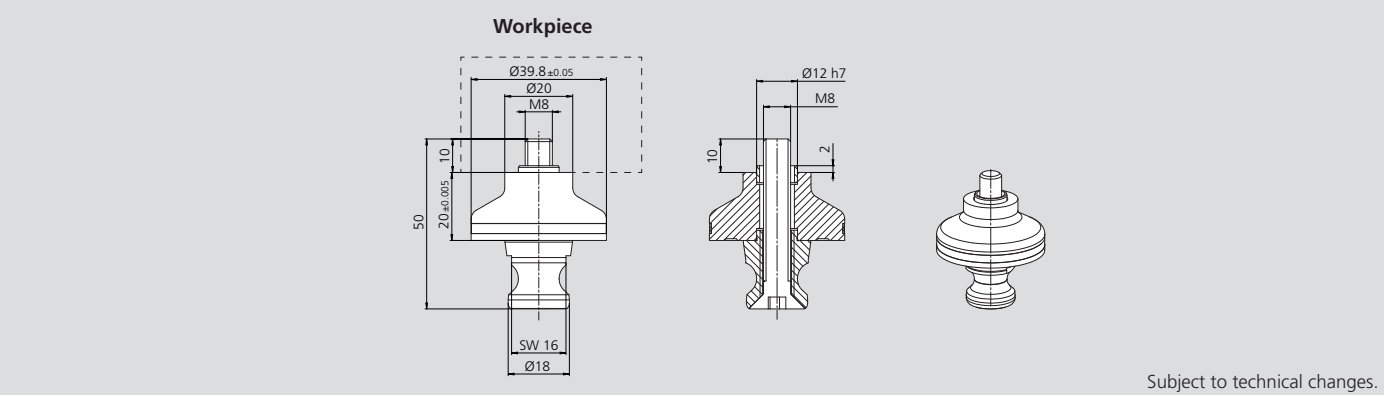

Subject to technical changes.

Reduction Thread [M]	Id. No. Height 20 mm
M8 Type A	460487
M8 Type B	467155
M8 Type C	467156

Center pin

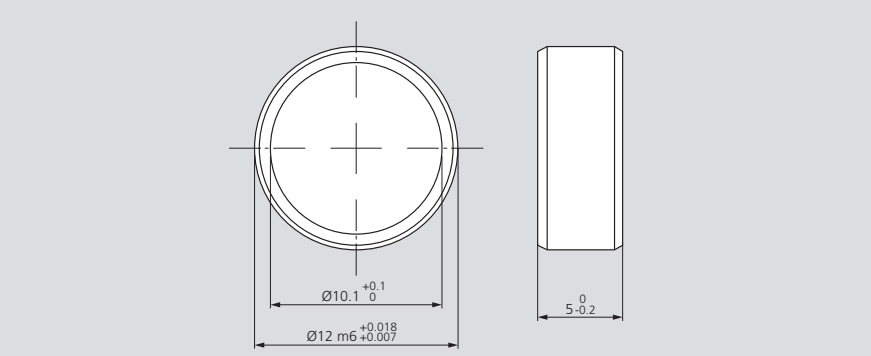

Subject to technical changes.

Center pin	Id. No.
For WPS 080	209223

Notes

WPS ZeroAct

Industry 4.0 Product

Description of function:

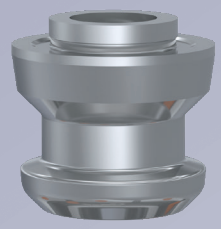

Clamping pin
(compatible to APS / WPS)

4 indexing slots

Centering cone
and flat support

Central manual
quick actuation
on both sides
(270° rotation)

Flexible
mounting

ZeroAct module
fully sealed and
low maintenance

Mounting options:

Mounting
from above with mounting
screw / fitting screw

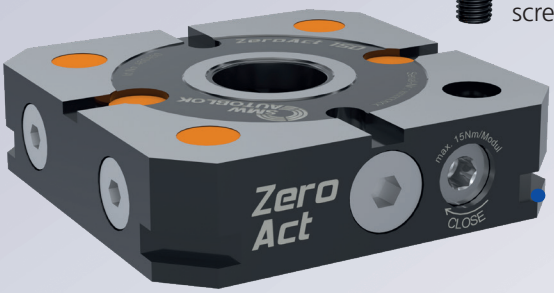

Fixing
with clamps

View from below:

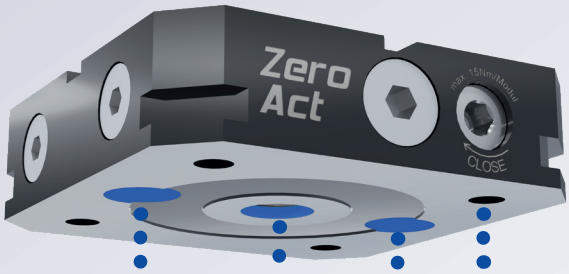

4x Ø12H7

Centering on a grid plate
by pass diameter Ø25H7
(compatible to WPS)

Up to 3 ZeroAct modules can be connected in a row with central actuation:

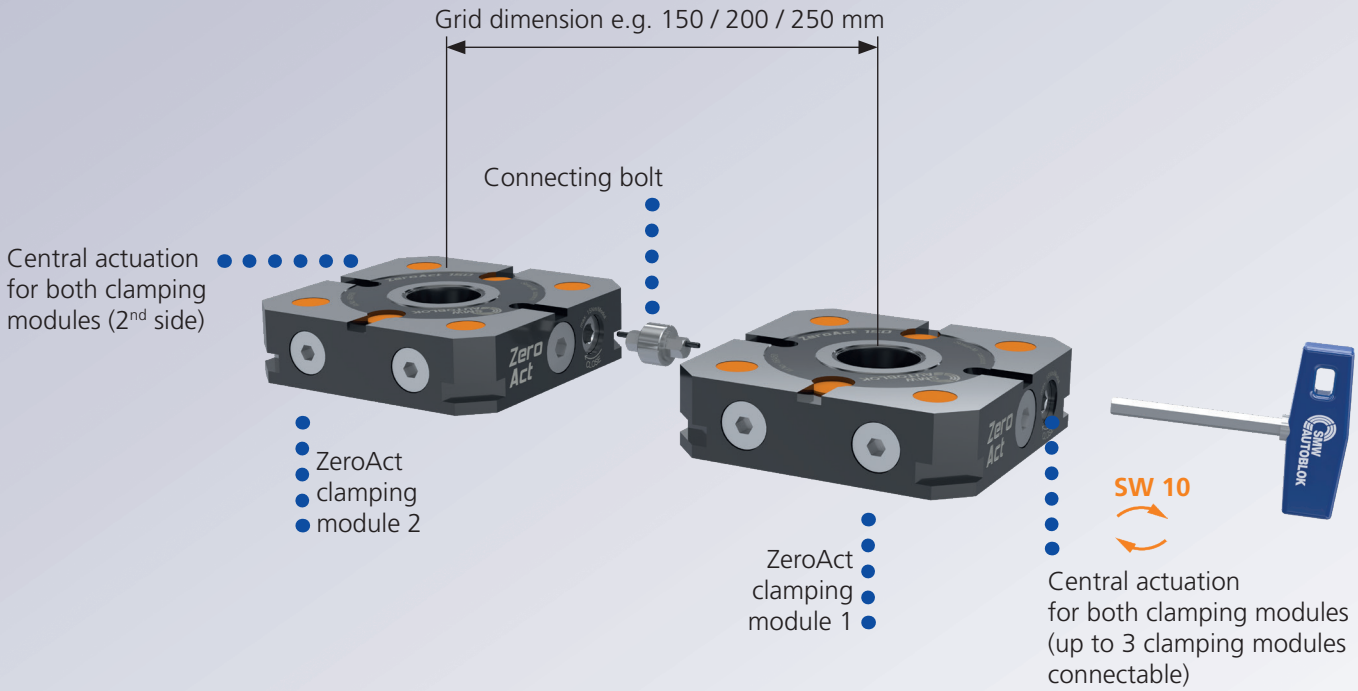

Application examples for connecting up to 3 clamping modules with central acuation:

2 ZeroAct clamping modules in a row, grid dimension 200 mm

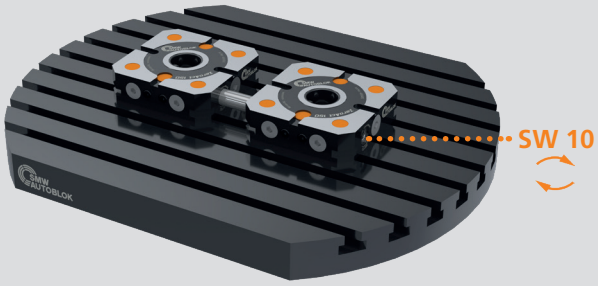

4 ZeroAct clamping modules (2x2 modules in a row), grid dimension 200 mm

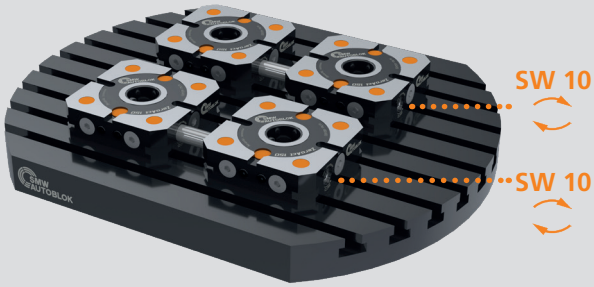

6 ZeroAct clamping modules (2x3 modules in a row), grid dimension 200 mm

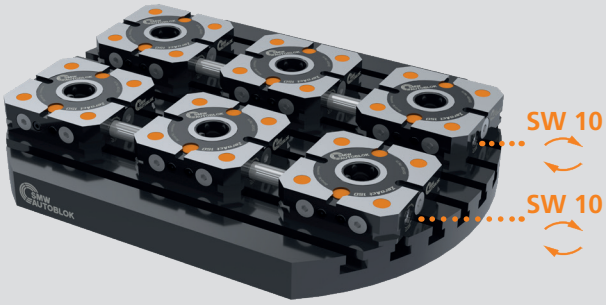

4 ZeroAct clamping modules (2x2 modules in a row), grid dimension 150 mm

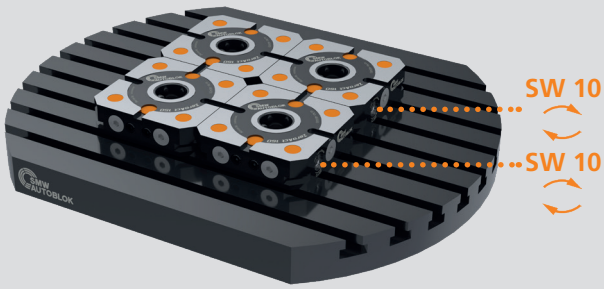

ZeroAct

Manual zero point module

Clamping module

- Connectable flexible zero point clamping module
- Fully sealed

Application/customer benefits

- Up to 3 ZeroAct modules could be connected in a row with central actuation
- Single quick-actuation for the rapid opening and closing of the modules with only 270° rotation
- Extremely flat design
- Huge reduction of set-up times for highest efficiency
- Safe workpiece clamping with maximum holding forces and highest repeatability
- Flexible configurations for customized use
- 4 indexing slots
- Interchangeable to the proven zero point system APS / WPS

Technical features

- Diameter 150 x 150 mm, height 40 mm
- Pull-in force 15 kN
- Max. torque 15 Nm
- Repeatability < 0.005 mm
- Holding force 35 / 50 / 75 kN (M12 / M16) depending on thread of clamping pin
- 2 clamping slides for maximum hold while clamping
- **proofline®** = fully sealed - low maintenance

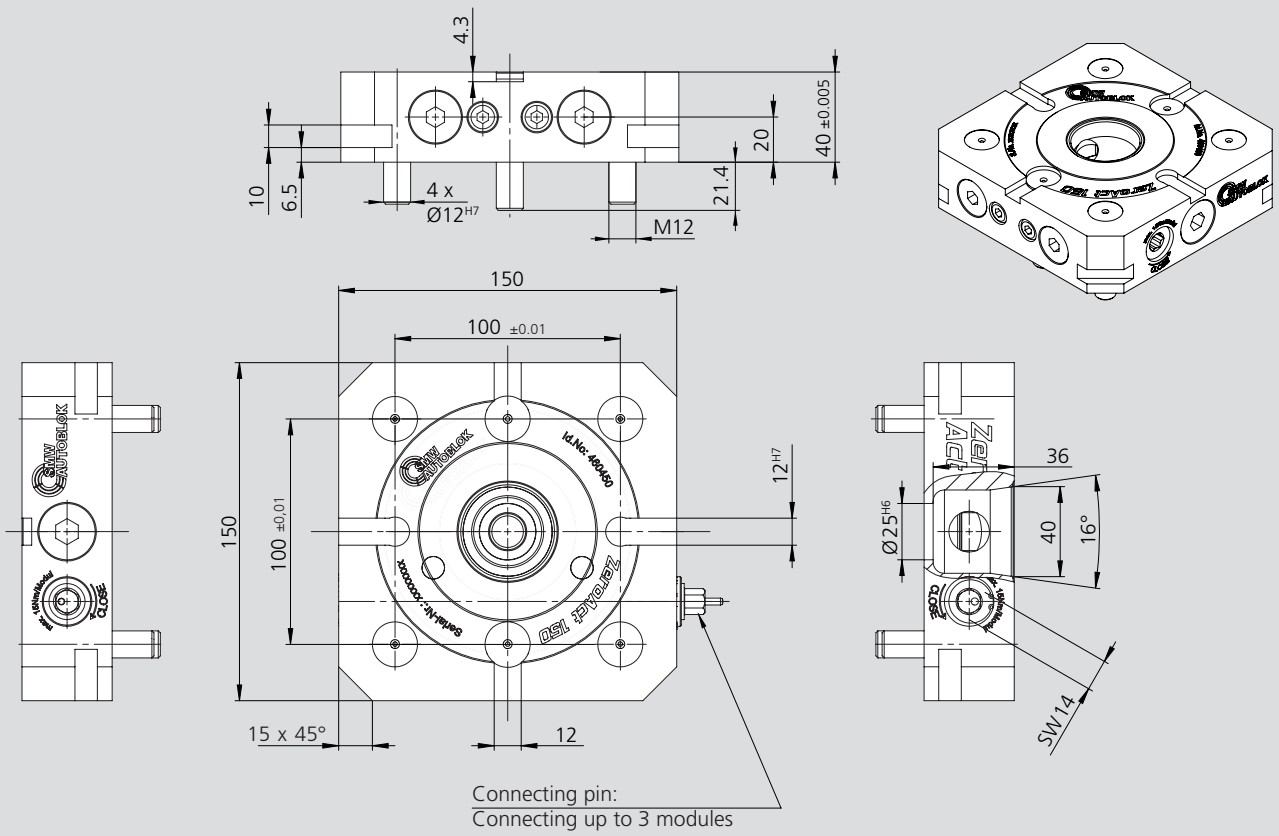

Subject to technical changes.

Technical data

SMW-AUTOBLOK Type	ZeroAct 460450
Pull-in force (kN)	15
Repeatability (mm)	< 0.005
Holding force (kn) M10	35
Holding force (kn) M12	50
Holding force (kn) M16	75

Type A Type B Type C

Application/customer benefits

- Fixation and positioning on the clamping system WPS
- Wear-resistant due to an extra hard protective coating
- Large entry radius of the clamping pins for easy and safe loading

Technical features

- Centering pin type A (standard)
- Sword pin type B (positioning pin)
- Clamping pin type C (with centering play 0.1 mm)

Standard equipment

Clamping pin with mounting screw

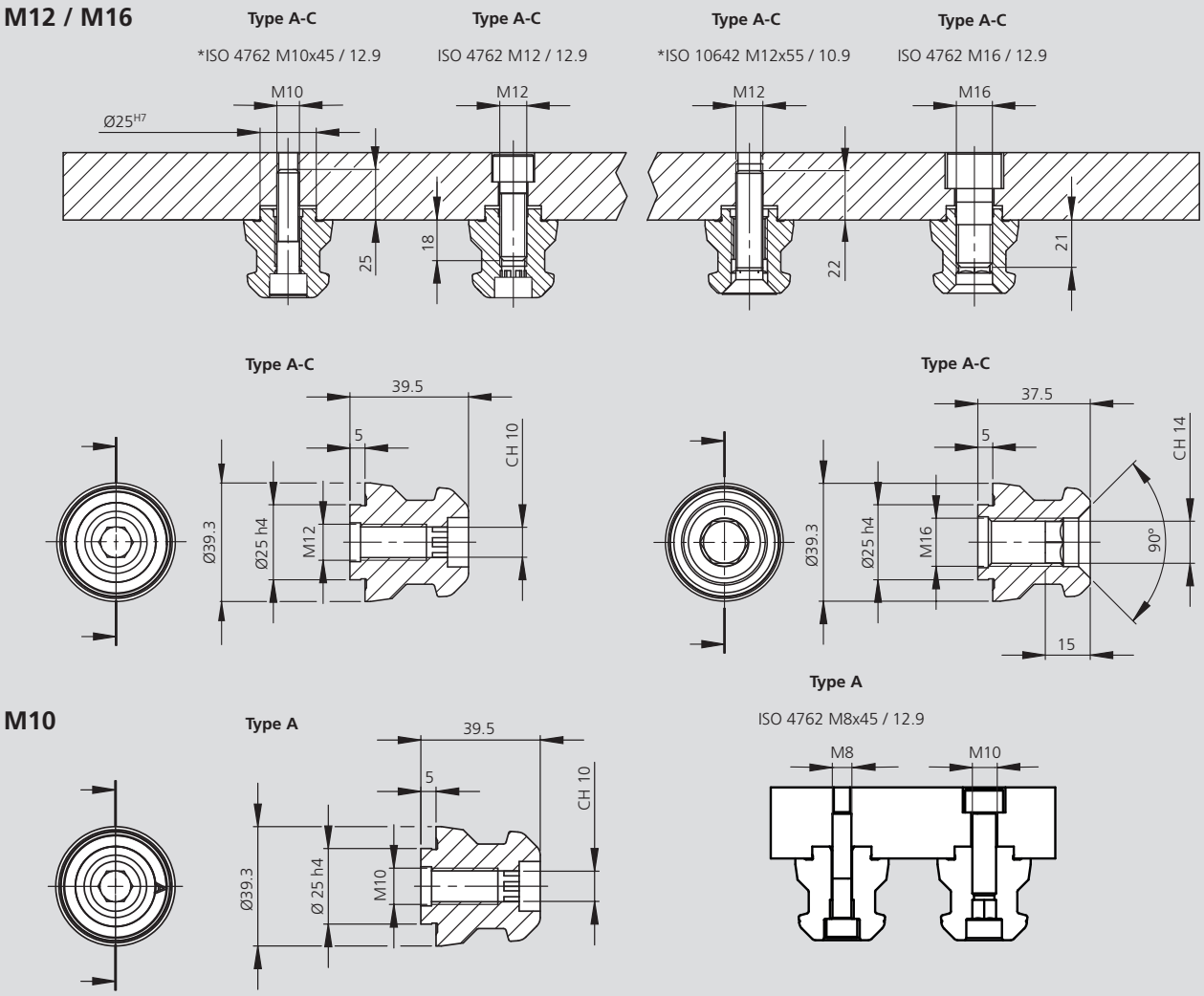

Subject to technical changes.

Order review

Type	Thread	Type A Id. No.	Type C Id. No.	Weight [kg]
Clamping pin ZeroAct	M10 / 12.9	467008	-	0.3
Clamping pin ZeroAct	M12 / 12.9	46162355	46162357	0.3
Clamping pin ZeroAct	M16 / 12.9	46162455	46162457	0.3

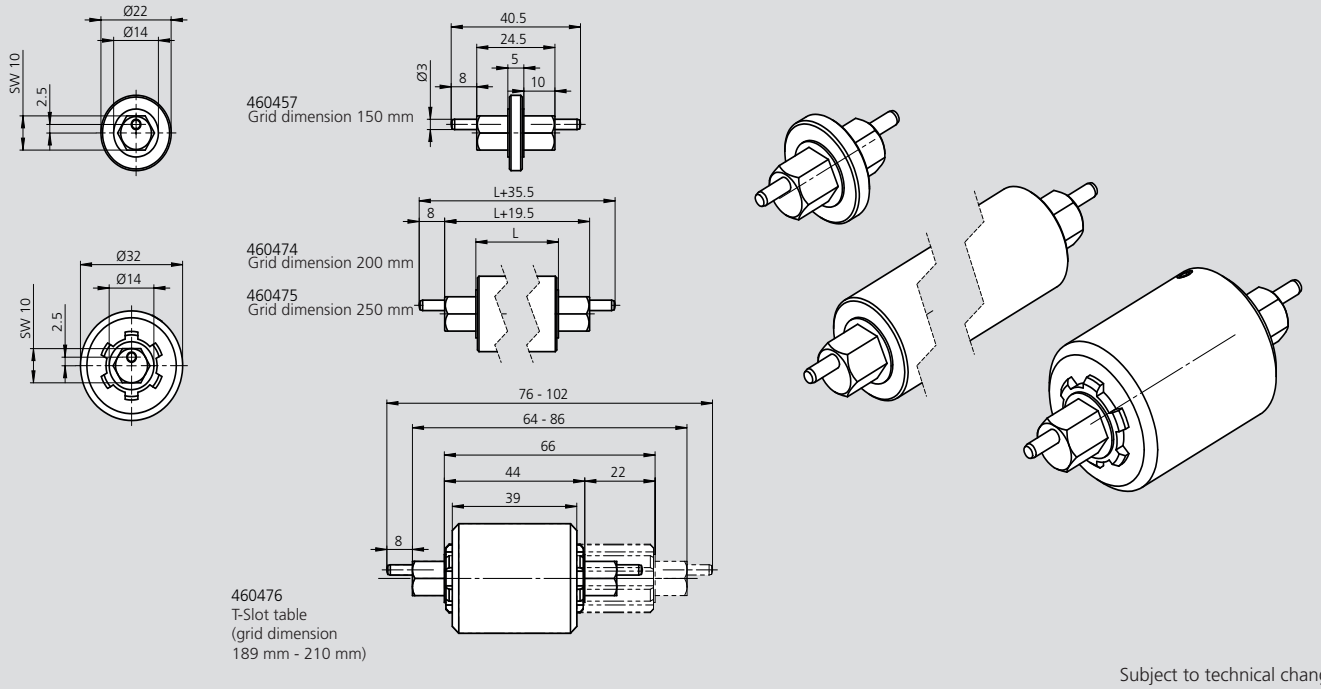

Subject to technical changes.

Order review

Type	Grid distance	Id. No.
ZeroAct connecting pin length 5 mm	150 mm	460457
ZeroAct connecting pin length 55 mm	200 mm	460474
ZeroAct connecting pin length 105 mm	250 mm	460475
ZeroAct connecting pin length 44 - 66 mm	63 - 70 T-slot	460476

Notes

Z-Flex

Workpiece positioning system

Height adjustable, manual zero point clamping system for workpiece direct clamping

- Single quick-actuation for the rapid opening and closing
- Fully sealed

Application/customer benefits

- Huge reduction of set-up times for highest efficiency
- Continuous height adjustment
- Ideal for 5-axis machining
- Single quick-actuation for the rapid opening and closing of the modules with only 3.5 rotations
- Flexible configurations for customized use
- Interchangeable to the proven zero point system APS

Technical features

- Diameter 80 mm
- Stroke 12 mm
- Pull-in force / max. torque 15 Nm
- Max. axial load 800 kg
- Repeatability < 0.005 mm
- Holding force 50 / 75 kN (M12 / M16) depending on thread of clamping pin
- 3 clamping slides for maximum hold while clamping
- **proofline®** = fully sealed - low maintenance

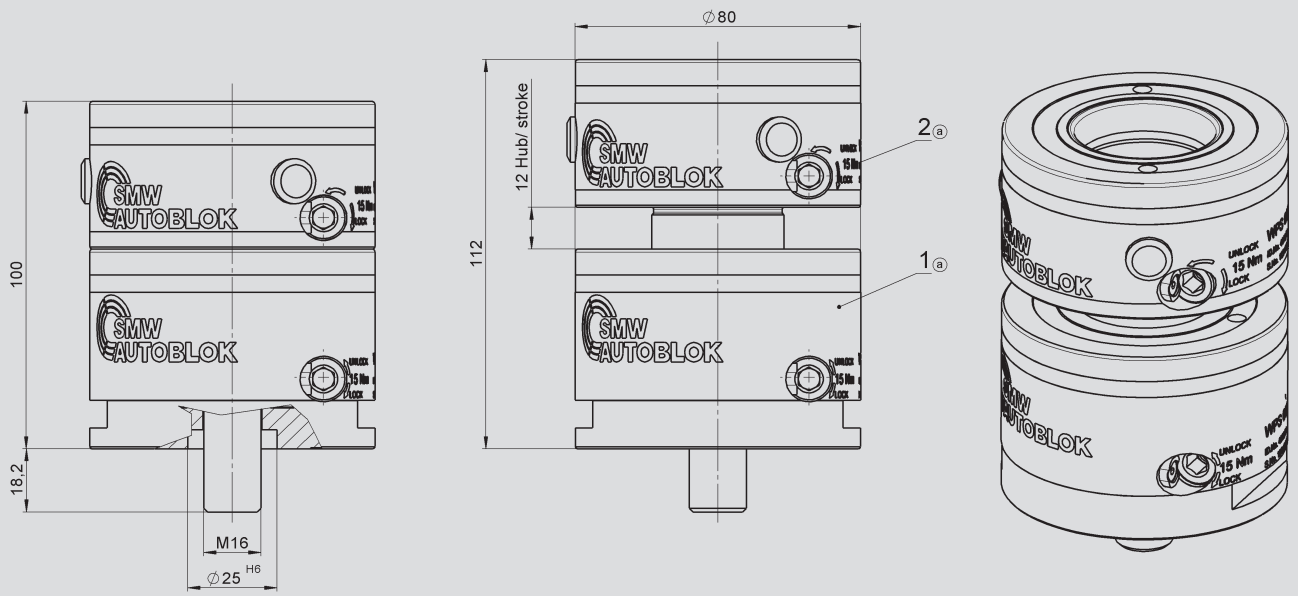

Subject to technical changes.

Technical data

SMW-AUTOBLOK Type	WPS Z-Flex 080-100 460264
A	Ø 80
B	-
B1	-
C	-
D / Depth	Ø 25H6 / 5.5
H	100 - 112
Pull-in force (kN)	15
Repeatability (mm)	< 0.02
Holding force M12 (kN)	25* / 50*
Holding force M16 (kN)	40** / 75**

* Holding force for ISO 4762 M10x45 - 12.9 / Holding force for ISO 4762 M12 - 12.9 (see clamping pins)
** Holding force for ISO 10642 M12x55 - 10.9 / Holding force for ISO 4762 M16 - 12.9 (see clamping pins)

Lowest clamping depth without pre-marking

Thanks to the **SinterGrip clamping inserts**, it is possible to clamp workpieces safe with a clamping depth of just 3.5 mm, so the workpiece can be completely machined in a single operation. This reduces the cost of materials, particularly where raw material costs considerably influence the piece price. **SinterGrip** also optimizes the performance of the machine and tools: faster cutting and feeding speeds mean larger cutting volumes and shorter machining times for each workpiece.

In addition, production steps required until now, such as workpiece pre-marking, are no longer necessary. Eliminating the pre-marking process reduces investment costs and saves on upstream processing costs. Considerable time is also saved as the workpiece, it can be clamped immediately by eliminating upstream processes.

The triangular insert with pyramidal teeth penetrates into the material, creating a positive fit between the clamp and the workpiece. The forces and vibrations generated during machining are evenly distributed and absorbed.

SinterGrip comes in 3 different versions for different materials: steel, hardened steel (up to 54 HRC) / titanium and aluminium / plastic. **SinterGrip** is compatible with all commonly available types of vises and clamping devices.

SinterGrip clamping inserts

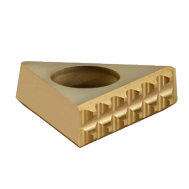

Page 116

SinterGrip

Clamping inserts

- Lowest clamping depth only 3.5 mm
- No pre-marking necessary
- Highest stability and active vibration absorption
- Increasing of the cutting forces compared to other systems

SinterGrip
Clamping inserts

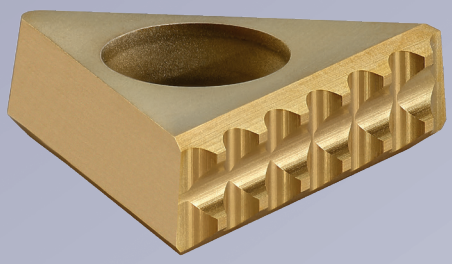

SinterGrip
clamping insert

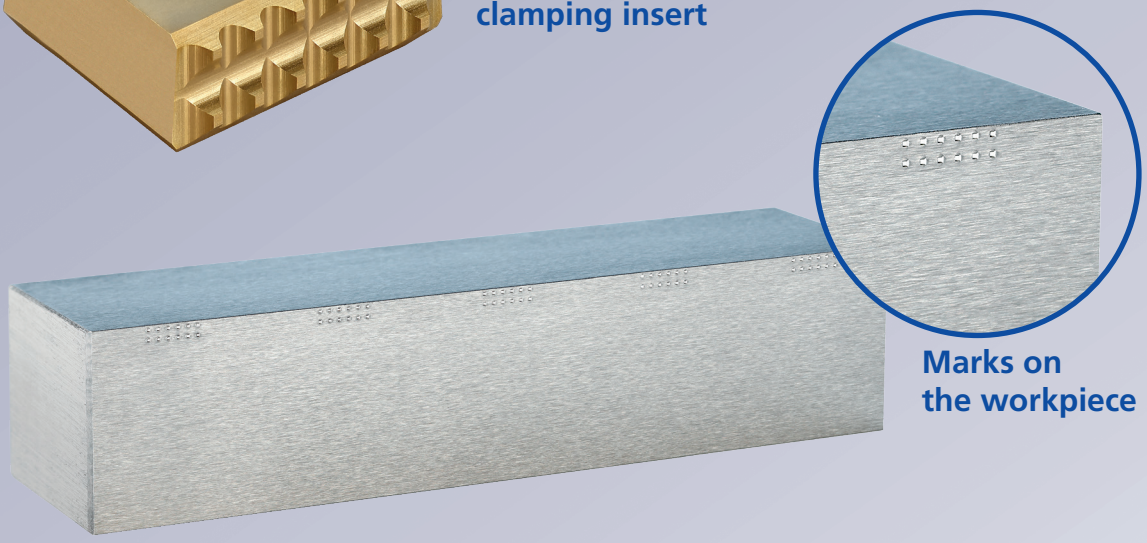

Marks on
the workpiece

Comparison clamping depths

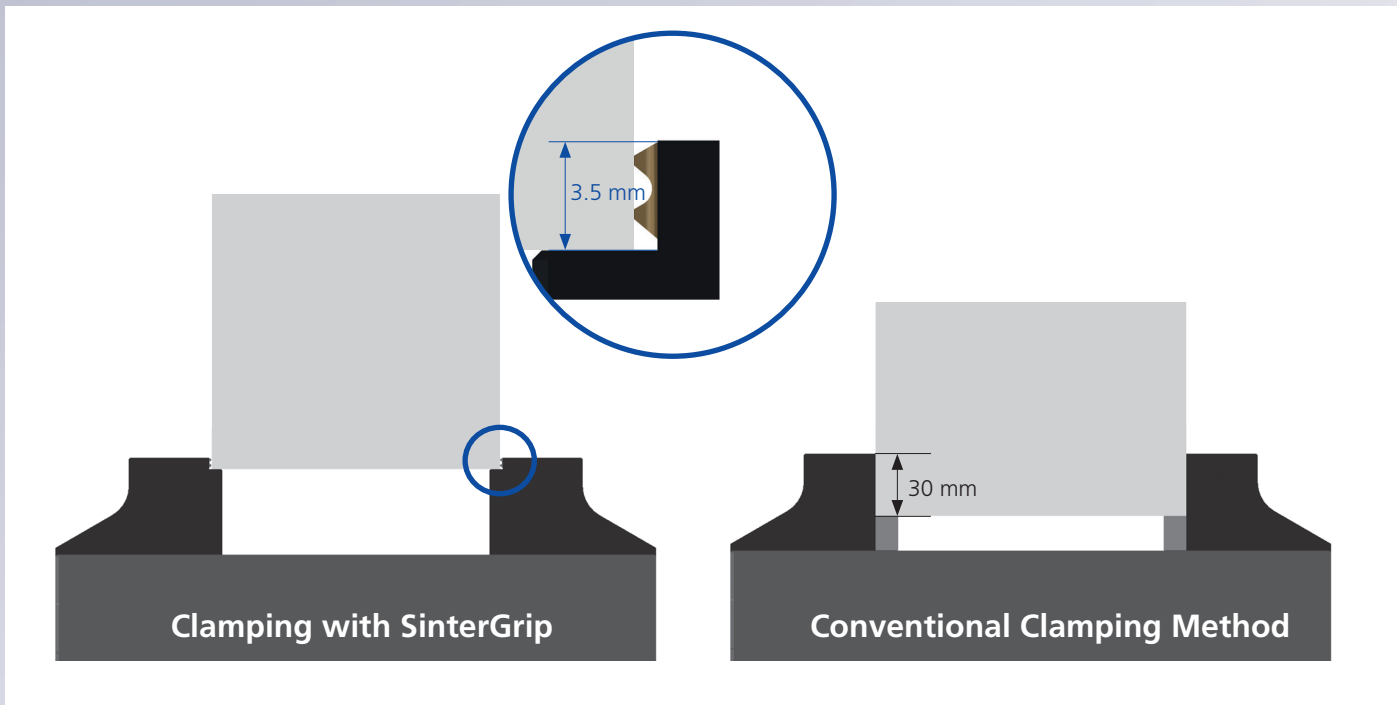

▶ Lowest clamping depth of workpieces – no pre-marking

Benefits

1

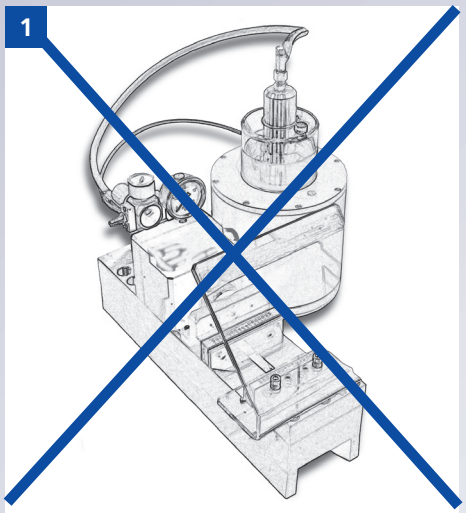

No pre-marking necessary

→ Elimination of the costs for a pre-mark machine and set-up times

2

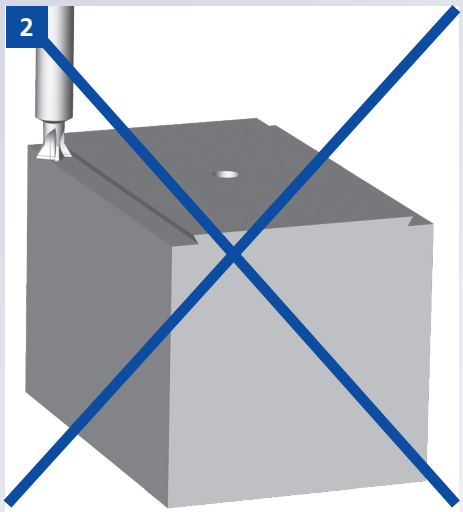

No pre-machining of the workpiece or clamping surfaces necessary

→ Elimination of the costs for the pre-machining

3

3 different versions for all materials:

→ Steel

→ Hardened steel | Titanium (up to 54 HRC)

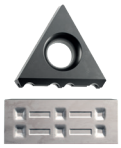

→ Aluminium | Plastic

4

Best accessibility and highest holding forces

→ Safe clamping of workpieces
→ Ideal for 5-axis machining
→ High material saving due to lowest clamping depth only 3.5 mm

5

Maximum lifetime | No wear costs

→ SinterGrip clamping inserts are made from coated carbide steel and have maximum lifetime
→ The inserts are individually exchangeable

6

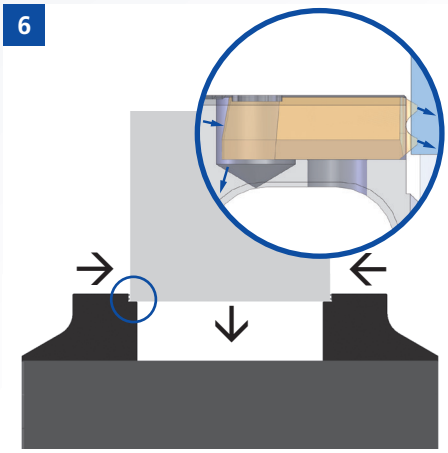

Pull-down effect | Active vibration absorption

→ Even distribution of the clamping forces and active vibration absorption
→ Form-fitting clamping by means of the SinterGrip inserts

SinterGrip

Clamping inserts

- Low clamping depth
- High stability and active vibration absorption

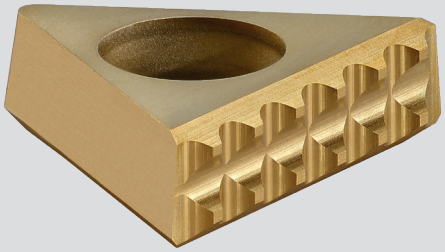

Application/customer benefits

- Very low clamping depth (only 3.5 mm) ensures safe clamping of the workpieces: Highest efficiency and productivity resulting in lower material costs and less machining costs
- No pre-marking necessary: eliminates costs for a pre-mark machine and set-up times
- Highest stability and active vibration absorption
- Pull-down effect due to the special row of the teeth
- Increases cutting speeds compared to other systems
- Simple manufacturing of jaws for SinterGrip inserts by the customer
- Maximum lifetime

Technical features

- Clamping depth only 3.5 mm
- 3 different versions for steel, hardened steel / titanium (up to 54 HRC) and aluminium / plastic
- Made from coated carbide steel

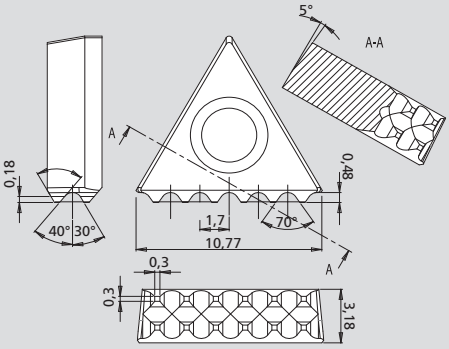

SinterGrip STD

Clamping insert for steel

Id. No. 58450119

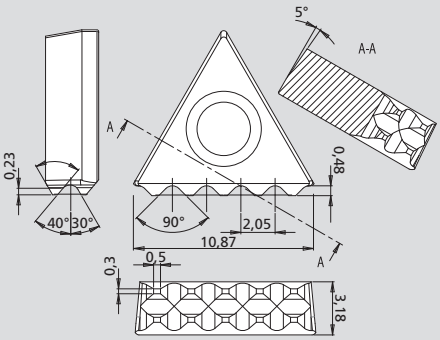

SinterGrip HRC

Clamping insert for hardened steel and titanium until 54 HRC

Id. No. 58450129

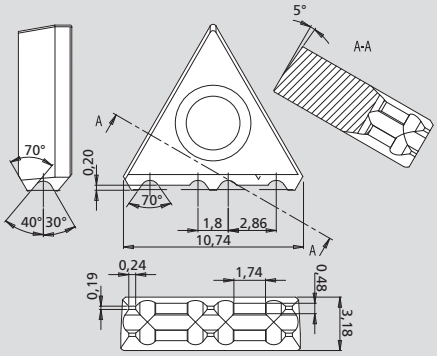

SinterGrip ALU

Clamping insert for aluminium and plastic

Id. No. 58450139

Order review

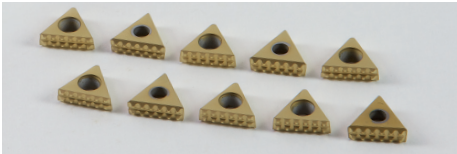

Type	Id. No.
SinterGrip STD	58450119

Consisting of 10 pcs. clamping inserts
(without bolts; Order no. SinterGrip bolt-set 58450219)

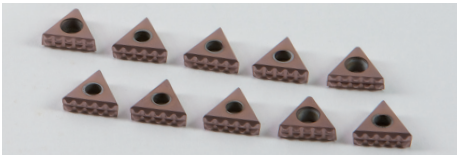

Type	Id. No.
SinterGrip HRC	58450129

Consisting of 10 pcs. clamping inserts
(without bolts; Order no. SinterGrip bolt-set 58450219)

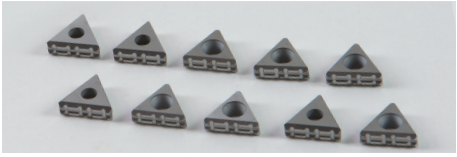

Type	Id. No.
SinterGrip ALU	58450139

Consisting of 10 pcs. clamping inserts
(without bolts; Order no. SinterGrip bolt-set 58450219)

SinterGrip Bolt set, consisting of 10 pieces

Type	Id. No.
SinterGrip	58450219

Key T9

Type	Id. No.
SinterGrip	58450320

Protection cover aluminium set, consisting of 10 pieces

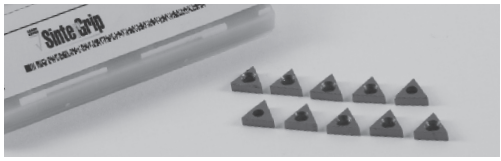

Type	Id. No.
SinterGrip	58450519

Pair of jaws, set (incl. 1 pair parallels, wrench torx T9, screws)

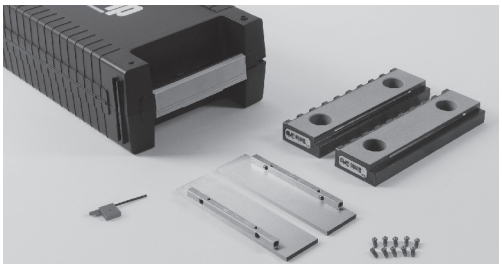

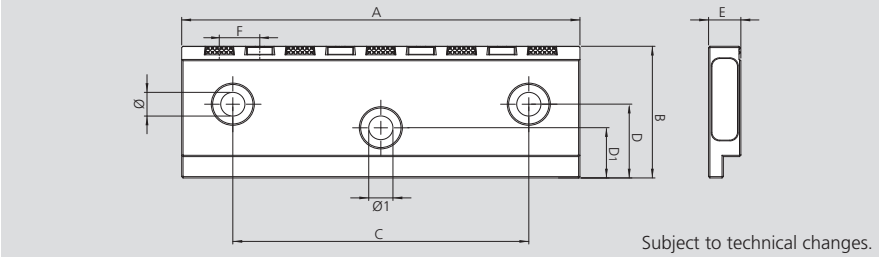

Type	Id. No. Version 1	Id. No. Version 2	A mm	B mm	C mm	D mm	D1 mm	E mm	Ø mm	Ø1 mm	H parall. mm	F mm
ALLMATIC-T-REX/TITAN	58451119	58452119	124.4	39.5	88	12.3	18	12	7	11	36.5	14
GRESSEL/WNT/SCHUNK	58451129	58452129	125	40	80	15	-	12	9	-	36.5	14
HILMA	58451149	58452149	125	45	80	14	-	12	9	-	42	14
KURT 6“	58451229	58452229	152	44.1	98.4	23.6	-	18.4	11	-	41	15.875
ALLMATIC-T-REX/TITAN	58451319	58452319	160	49.8	88	12.3	20	12	7	11	47	14
GRESSEL/WNT/SCHUNK	58451329	58452329	160	50	100	20	-	12	11	-	47	14
HILMA	58451349	58452349	160	54	100	17	-	12	11	-	51	14

Version 1: without wolfram-carbide coating
Version 2: with wolfram-carbide coating
for a better grip in the 2nd operation (picture)

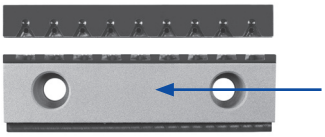

Number of the needed SinterGrip clamping inserts:
Id. No. 58451119 to 58452229: 9 pcs. SinterGrip clamping inserts
Id. No. 58451319 to 58452349: 11 pcs. SinterGrip clamping inserts

Starter Kit (for the preparation by the customer, tutorial see next page)

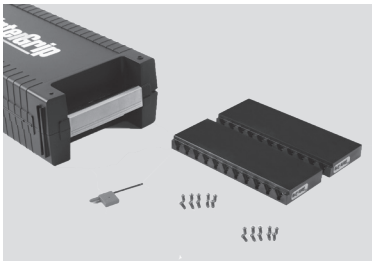

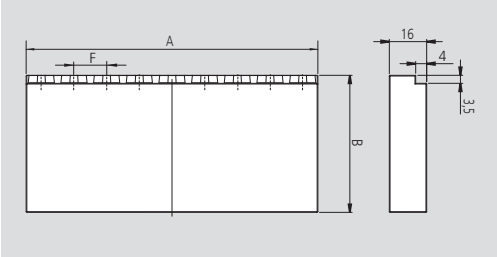

Type	Id. No.	A mm	B mm	F mm	Inserts
Starter Kit	58453119	125	59	14	9
Starter Kit	58453319	160	59	14	11
Starter Kit	58453419	200	70	15	13

Consisting of:
1 pair of jaws,
1 wrench TORX T9 and 1 kit of 10 screws

SinterGrip

Manufacturing of jaws for SinterGrip inserts by the customer

- Milling cutter for SinterGrip clamping inserts
- Manual

SinterGrip milling cutting tool

Type	Id. No.
SinterGrip milling cutter	58450410

Solid carbide end milling cutting tool, Ø 4 mm, 3 cutting edges, Ø3x5°, V = 40-60 m/min, Fz = 0.01-0.04mm / tooth.

Drawing for the pocket to include SinterGrip clamping inserts:
Recommended cutting parameters:
Cutting speed V = 80-120 m/min
Feed force per tooth FZ = 0.02 mm

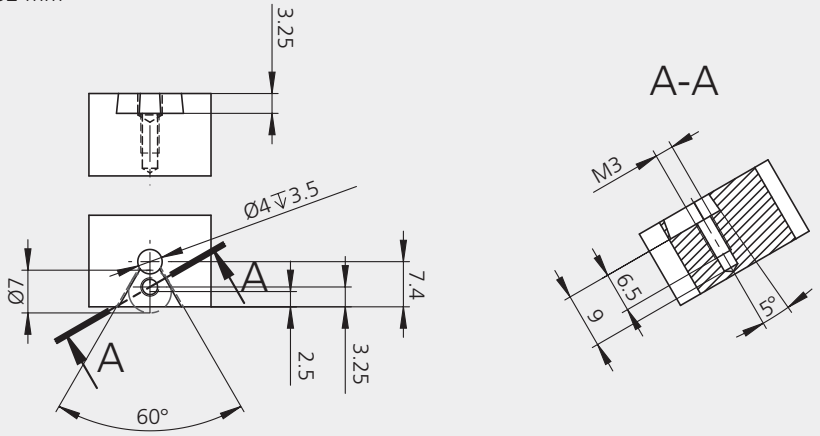

Subject to technical changes.

Tutorial for the preparation of jaws for SinterGrip inserts by the customer

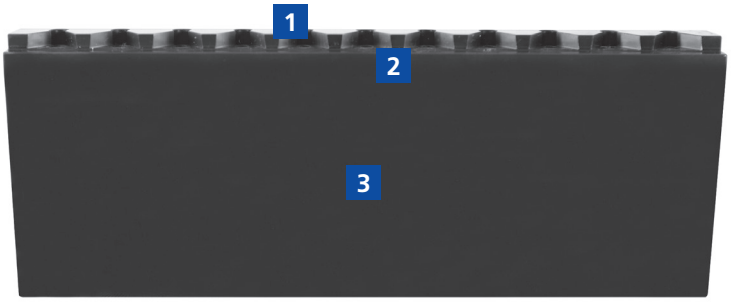

1. Shape of the SinterGrip pocket manufactured with SinterGrip milling cutting tool (Id.-No. 58450410)
2. Clamping step 3.5x4 mm
3. Jaw made from nitrided steel with a tensile strength of ≈ 980N/mm²

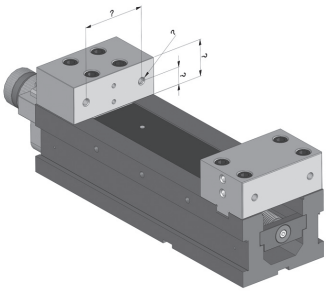

Measurement of the dimensions of the vise

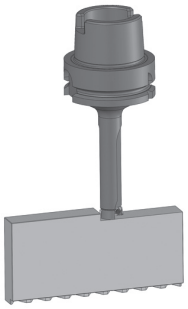

Milling of the jaw to the required height

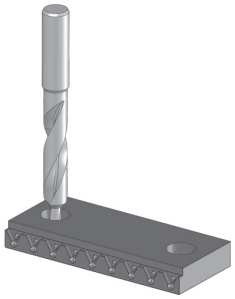

Drilling of the jaw with the correct distance of the holes

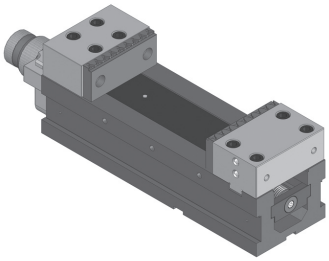

Mounting of the jaw on the vise

SinterGrip

- Multi jaw for the use of SinterGrip clamping inserts on machine vises
- Form-fitting clamping of components without pre-processing

Multi jaw SinterGrip

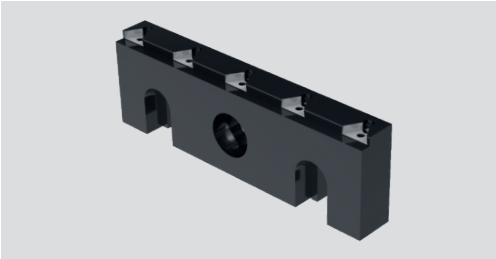

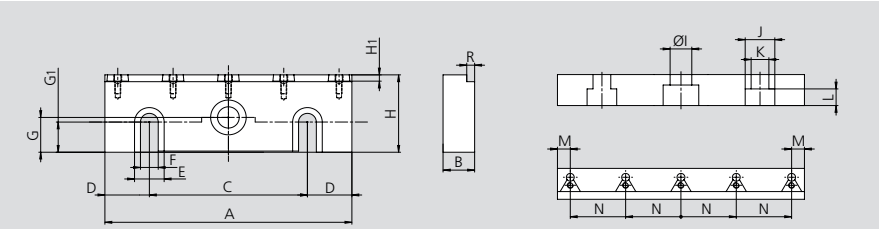

Subject to technical changes.

SMW-AUTOBLOK Type		Multi jaw SinterGrip 467112
A	mm	125
B	mm	18
C	mm	80
D	mm	22.5
E	mm	15
F	mm	9
G	mm	18
G1	mm	15.6
H	mm	40
H1	mm	3.25
I	mm	11
J	mm	15
K	mm	9
L	mm	8.6
M	mm	6.5
N	mm	28

Multi jaw compatible with SMW-AUTOBLOK TTI-2G 125, SMW-AUTOBLOK GT5-2G, Gressel gripos 125, WNT NCG 125, Schunk KSC 125, Allmatic NC8 125, TC/LC 125, Hoffmann HiPo Clamp 125, Garant NC high pressure vise version LC, KESEL NCA 125, CNC125, Röhm RKE 125

Consisting of: Multi jaw SinterGrip, without SinterGrip clamping inserts, without SinterGrip bolts

5-axis vises from SMW-AUTOBLOK

5-axis vises ensure the following advantages:

- GT5 ideal suitable for OP 10 use
- ST5-2G also suitable for OP 20 use
- ST5-HD Line for heavy duty applications
- Jaws with SinterGrip clamping inserts for clamping of workpieces with lowest depth and without pre-marking
- Compact design with best accessibility of the machine spindle
- High adjustable clamping forces
- Interfaces for all well known zero point clamping systems
- Wide range of standard accessories

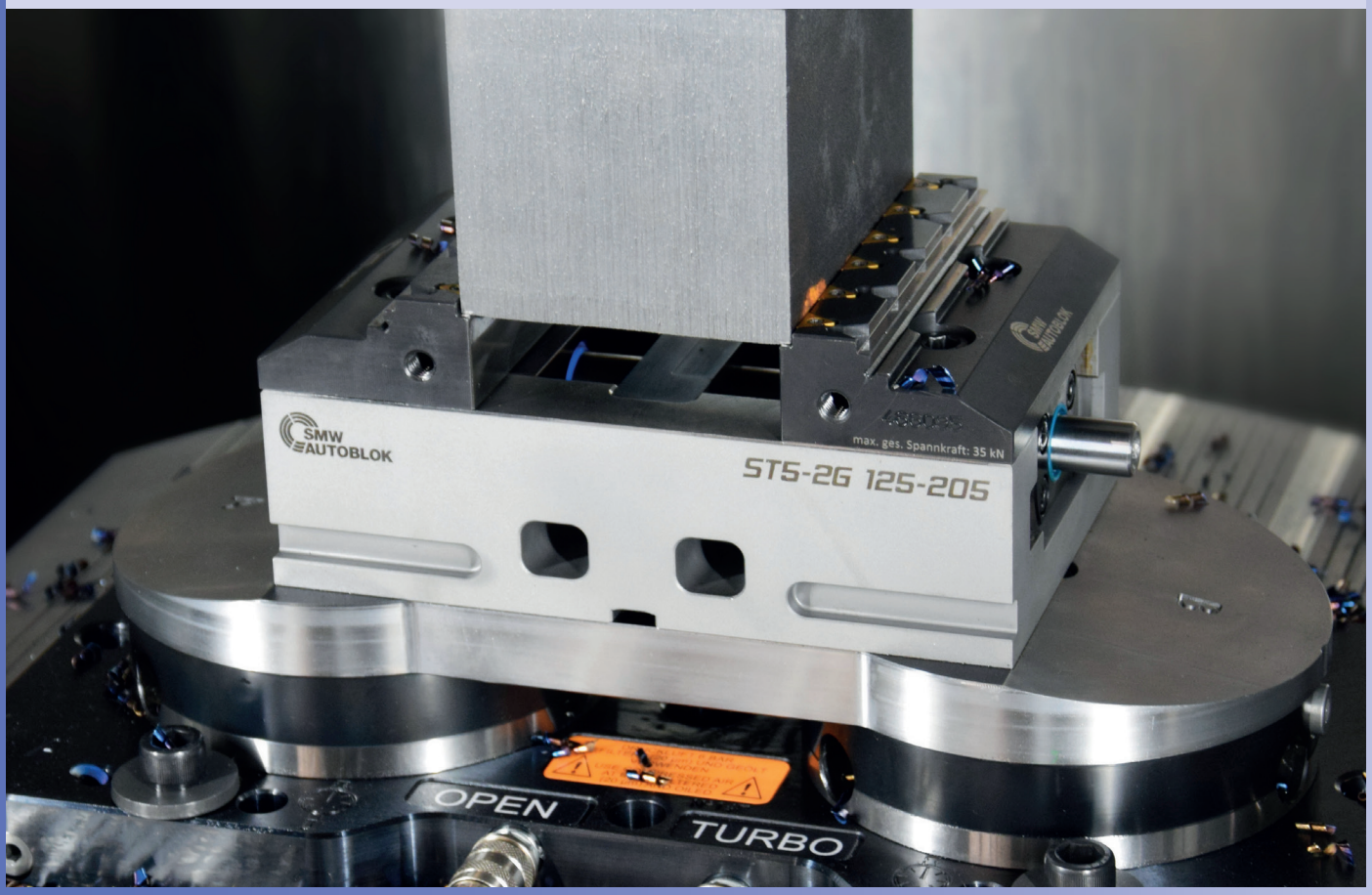

5-axis vises (Page 1 of 2)

Page 126

GT5-2G

5-axis vise

- Quick jaw change without tools
- Clamping range extension in seconds
- High clamping force
- Protected, fully sealed spindle
- Optical monitoring of end position

Page 132

GT5-2G Accessories

Jaws and accessories

- Stepped reversible jaws
- Soft jaws aluminium / steel
- Narrow clamping jaws
- SinterGrip
- Guide rail extension GSV
- Spindle extension SV
- Straddle clamps TSP

Page 136

GT5

5-axis vise

- Ideal suitable for OP 10 use
- Compact design
- High clamping forces
- With SinterGrip clamping insert jaws

Page 137

GT5 Accessories

Jaws and accessories

- Jaw with pull-down
- Base plate with interface for zero point clamping system APS / WPS
- Compatible also to all well known zero point clamping systems

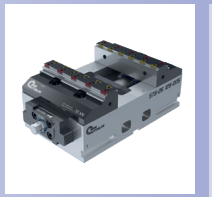

Page 138

ST5-2G

5-axis vise
ST5-2G 080 and ST5-2G 125

- Sealed spindle for protection against contamination
- Self-centering clamping
- Very compact design
- Large clamping range
- With SinterGrip clamping insert jaws
- Interfaces for zero point clamping systems

Page 142

ST5-2G S

5-axis vise
ST5-2G S 125 Short Version

- Sealed spindle for protection against contamination
- Self-centering clamping
- Very compact design
- Shorter clamping range
- With SinterGrip clamping insert jaws
- Interfaces for zero point clamping systems

Page 143

ST5-2G L

5-axis vise
ST5-2G L 125 Long Version

- Sealed spindle for protection against contamination
- Self-centering clamping
- Very compact design
- Extra large clamping range
- With SinterGrip clamping insert jaws
- Interfaces for zero point clamping systems

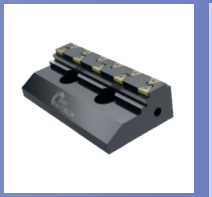

Page 144

ST5-2G Accessories

Jaws and accessories

- Top jaws
- Pull-down jaws
- Pendulum jaws
- Mounting devices
- Clamps and positioning keys

Page 152

ST5-HDS

5-axis vise
ST5-HD Heavy Duty Version

- Sealed spindle for protection against contamination
- Self-centering clamping
- Very compact design
- Large clamping range
- With SinterGrip clamping insert jaws
- Interfaces for zero point clamping systems

Page 153

ST5-HDS Accessories

Jaws and accessories

- Top jaws
- Adapter for ST5-2G top jaws

Page 155

GT5 / ST5-2G

Grip inserts

- Flexible use
- For GT5 and ST5-2G jaws
- Stop pins ALB

5-axis vises from SMW-AUTOBLOK

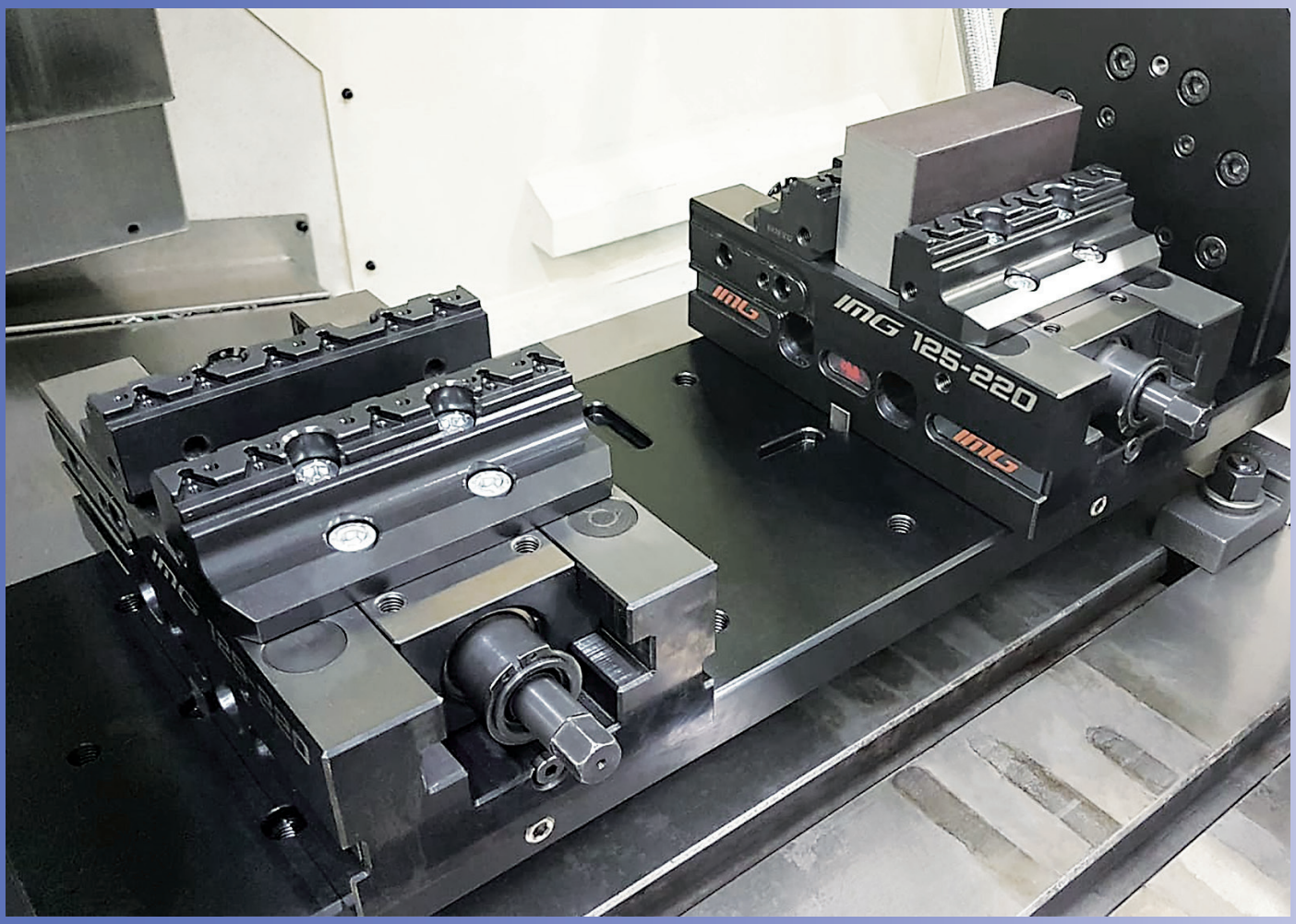

5-axis vises (Page 2 of 2)

Page 158

IMG

5-axis vise

- Ideal suitable for OP 10 use
- Compact design
- High clamping forces
- With SinterGrip clamping insert jaws

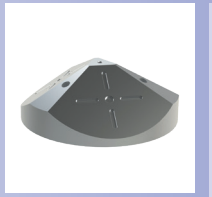

Page 170

IMG Accessories

Jaws and accessories

- Jaw with pull-down
- Base plate with interface for zero point clamping system APS / WPS
- Compatible also to all well known zero point clamping systems

Page 171

IMG Accessories

Jaws and accessories

- Jaw with pull-down
- Base plate with interface for zero point clamping system APS / WPS
- Compatible also to all well known zero point clamping systems

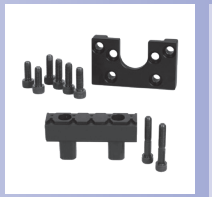

Page 172

IMG Accessories

Jaws and accessories

- Jaw with pull-down
- Base plate with interface for zero point clamping system APS / WPS
- Compatible also to all well known zero point clamping systems

NEW GENERATION

The flexible 5-axis vise

proofline® series
fully sealed – low maintenance

GT5-2G

Telescopic spindle proofline® sealed and low maintenance

Plane surface for parallels for finish machining OP20

Innovative quick change jaw system - without tools and screws for minimum set up time

Movable jaw

Fixed jaw (can be repositioned)

Possibility for work stop mounting

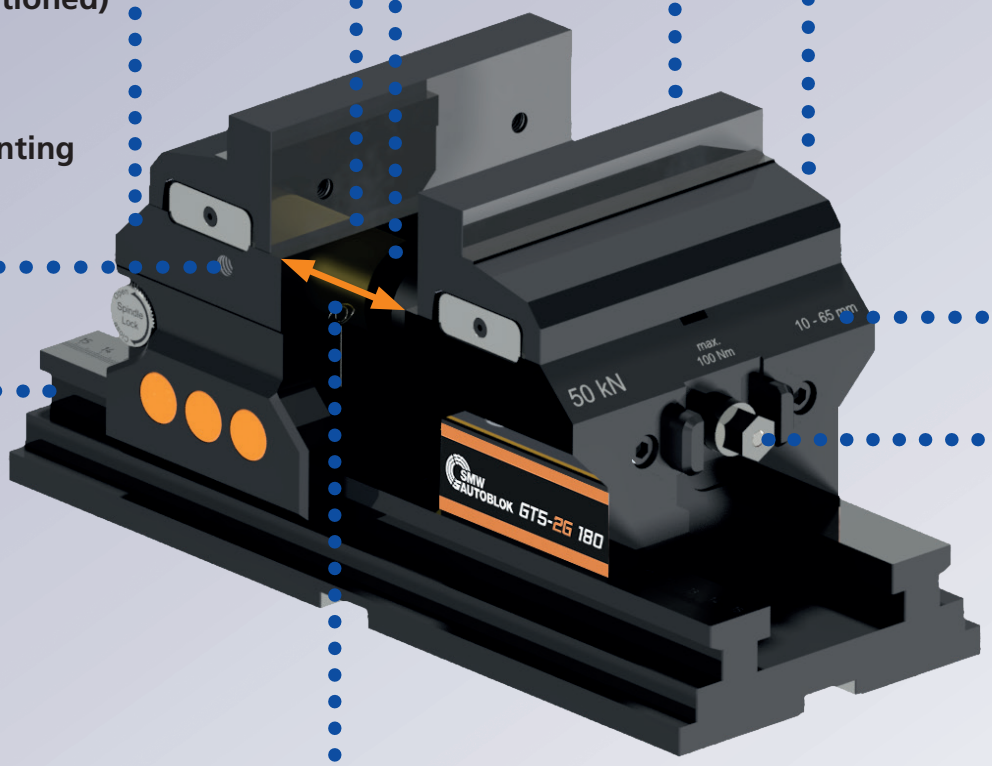

Simple extension of the clamping range by different guide rail and spindle extensions (up to 1335 mm)

Extreme rigid guide rail with scale for simple jaw positioning

Optical check for the end postion

Actuation for high clamping forces up to 50 kN

Clamping glossary

GT5-2G: The new 5-axis vise GT5-2G contains a sophisticated and user friendly kit system. The GT5-2G consist of a moveable jaw and a fixed jaw which are mounted on a guide rail. The guide rails are available in different lenghts and are extendable, so the GT5-2G can be custom configured. With our wide range of top jaws we can cover all needed options at the 5-axis machining.

Jaw quick change: The top jaws can be changed within seconds without using tools or screws. It is set up for time saving which reduces the productions costs.

Extension of the clamping range: The clamping range of the GT5-2G can be extended in a short time up to a clamping lenght of 1.335 mm. This can be done using different guide rails and spindle extensions.

Check of the end position: By the optical check for the end position the user will notice if the work piece is clamped safely with enough clamping force and residual stroke. This secures highest reliability during the machining process.

Actuation: The telescopic spindle is permanently lubricated, sealed and is low in maintenance. The integrated power amplifier creates clamping forces up to 50 kN. This guarantees constant high clamping forces. Pre punching of the workpiece is not needed.

Tool less jaw quick change

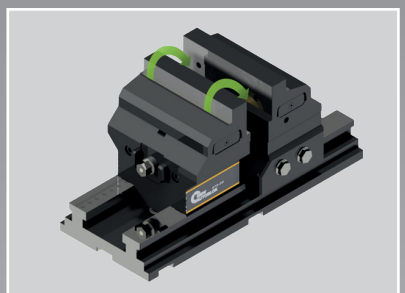

1. Swing the top jaws to the inside

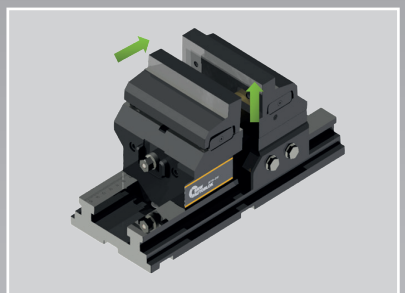

2. Remove the top jaw

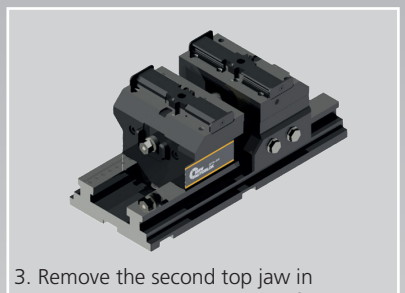

3. Remove the second top jaw in the same way like shown before

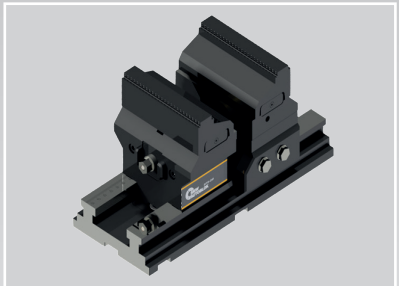

4. Install the new top jaws

Less interference

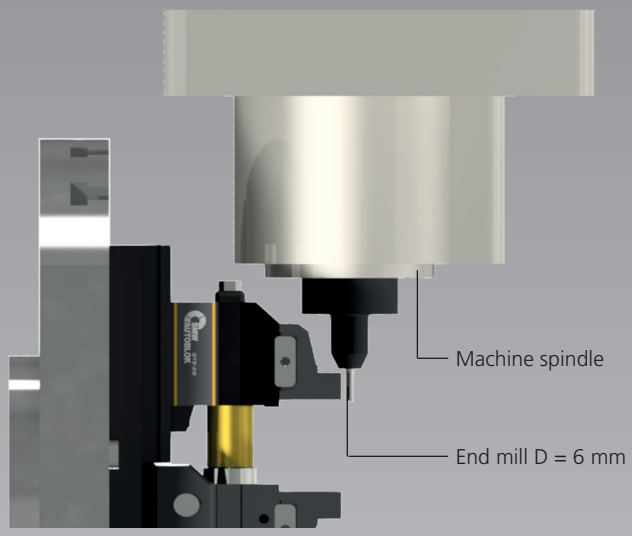

3 different jaw heights for the moveable and the fixed jaw

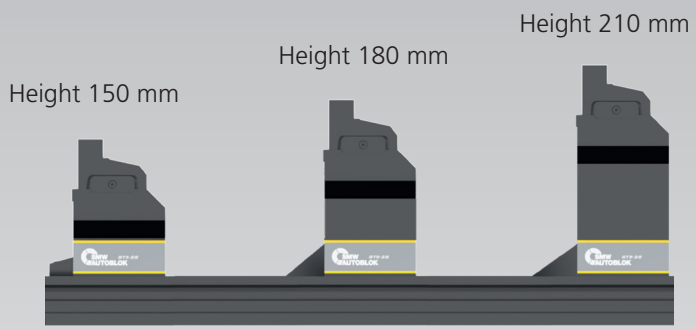

GT5-2G Guide rail (GS)

Internal trapeze clamps
- Less deformation, rigid connection with the machine table
- No interference on the machine table caused by outer clamps
- Quick mounting on the machine table by only 2 or 3 trapeze clamps

Clamping actuation
- 50 kN clamping force at 100 Nm torque
- Permanently lubricated and low maintenance

Quick change system for spindle extension

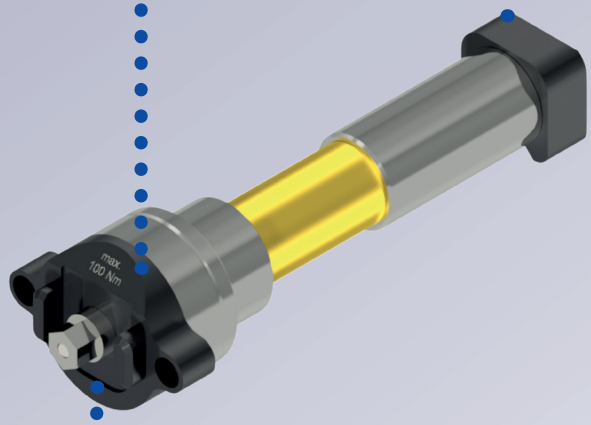

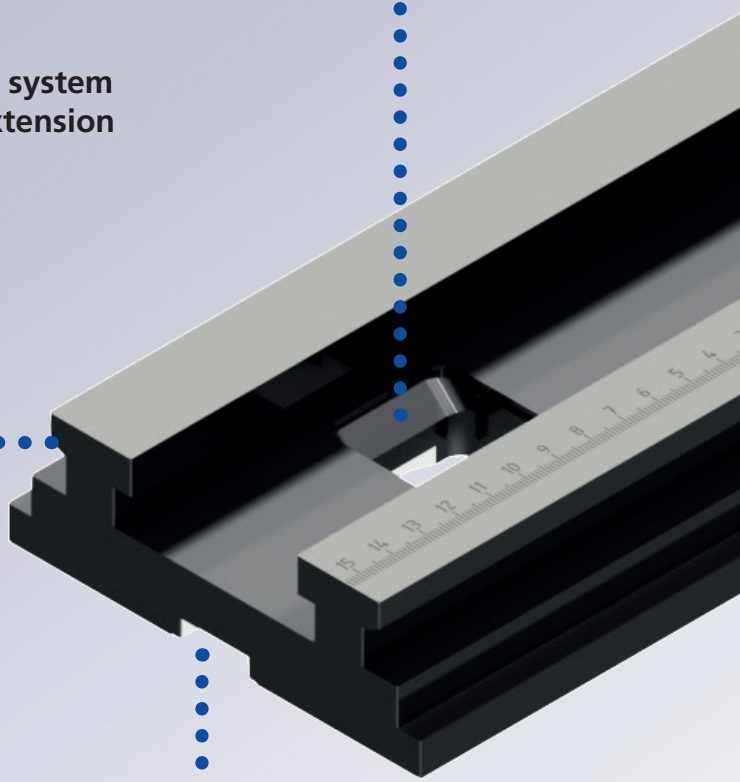

4-times indexing
- Longitudinal and crosswise clearence slot for positioning on the machine table

Safety features
- Optical check for the end position

Inclined locking surface to lock the fixed jaw in position

Guide rail lenght overview

- Slot 20 h6
- Pitch 150 mm
- Pitch 200 mm
- Pitch Erowa
- Pitch Lang Quick Point

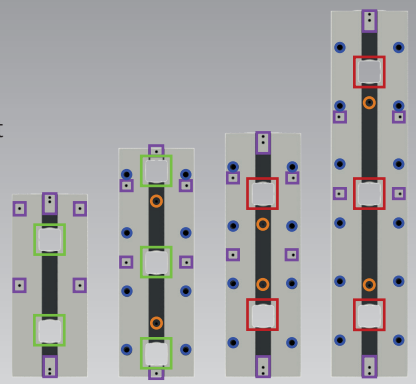

300 mm 375 mm 400 mm 600 mm

Innovative mounting by trapeze clamps

- Bending line with conventional mounting
- Bending line with mounting trapeze clamps

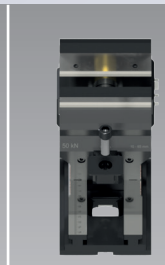

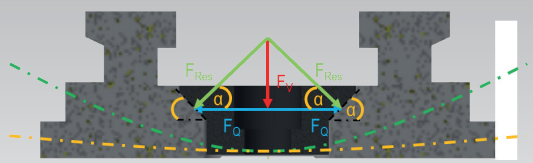

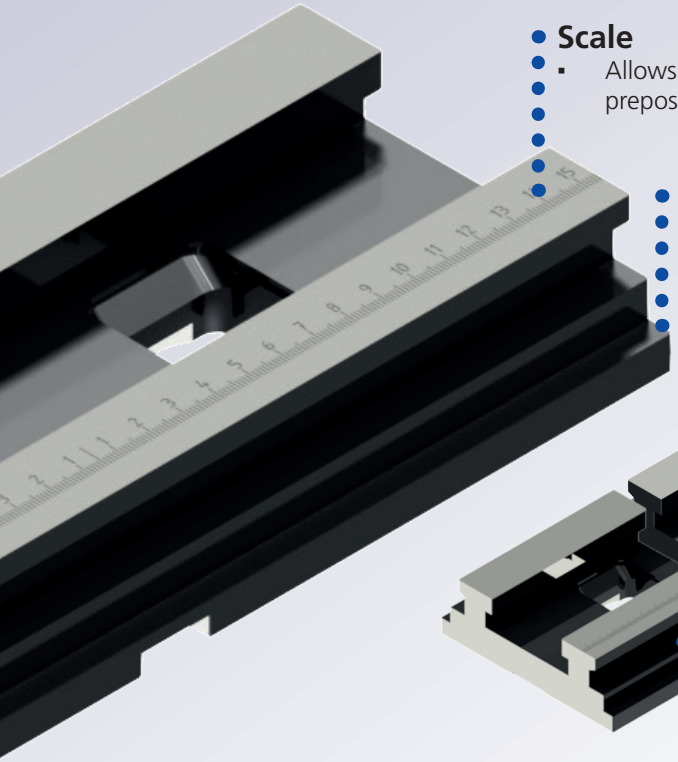

Scale

- Allows easy and quick prepositioning for the fixed jaw

Area for clamps

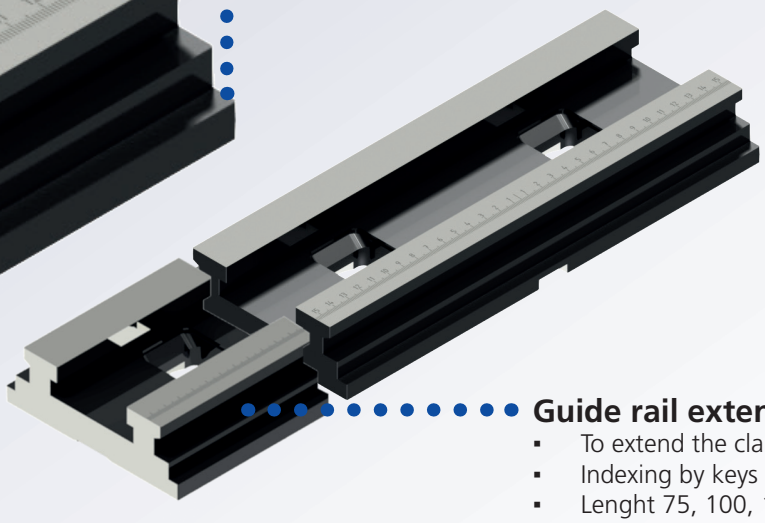

Guide rail extension (GSV)

- To extend the clamping range
- Indexing by keys (on one side)
- Lenght 75, 100, 150, 200 mm

Spindle extension

1. Open the knurled screw located at the fixed jaw by 2 revolutions.
2. Slide the moving jaw towards the fixed jaw.
3. Remove the locking plate by pulling it upwards.
4. Engage the spindle extension from the top.
5. Reengage the locking plate.
6. Push the moving jaw back and lock the knurled screw again by 2 revolutions.
7. screw in the knurled screw with 2 turns.

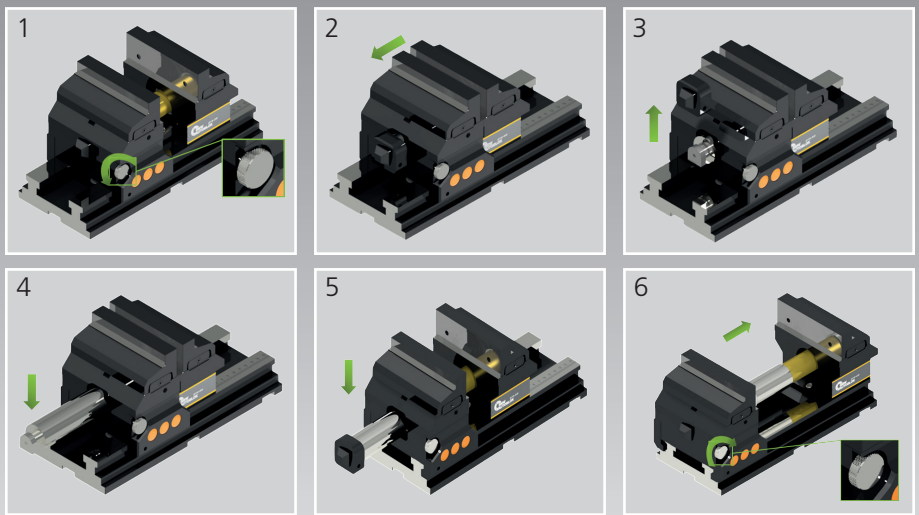

GT5-2G

5-axis vise

■ **Fully sealed – Protected spindle**
■ **Highest reliability and repeatility**

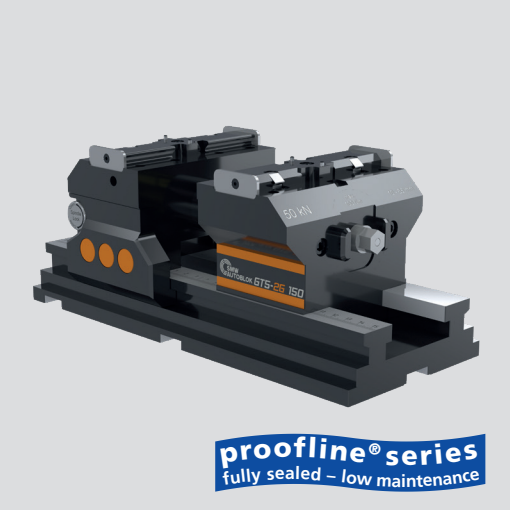

Application/customer benefits

- Quick jaw change without tools
- Clamping range extension in seconds with spindle extensions
- High clamping force from a power amplifier - no pre-punching necessary
- Protected fully sealed spindle
- Plane surface for parallels used for finish machining
- Variable positioning of the fixed jaw
- Optical monitoring end position
- Clamps can be used for inside and outside clamping
- Guide rail extendable on machine table (T-slot aligned)

Technical features

- Max. clamping force 50 kN at 100 Nm
- Clamping range 10 to 1335 mm (basic stroke 60 mm)

Standard equipment

GT5-2G-drive unit,
GT5-2G-guide rail +
corresponding spindle extensions

Ordering example

GT5-2G 150 PREMIUM 463332,
Stepped reversable top jaws grip 463285,
2 pieces straddle-clamps TSP 463308

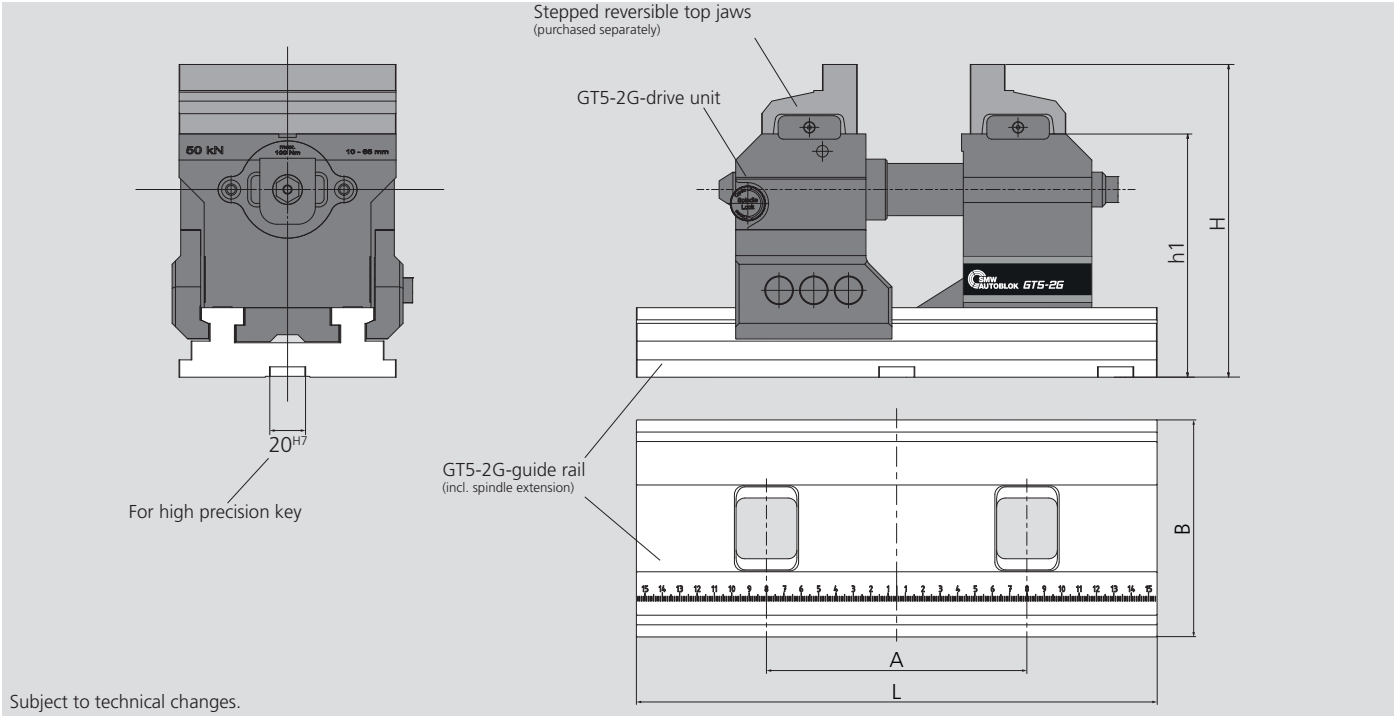

Subject to technical changes.

Type GT5-2G-Premium		GT5-2G 150				GT5-2G 180				GT5-2G 210			
Length **L**	mm	**300**	**375**	**400**	**600**	**300**	**375**	**400**	**600**	**300**	**375**	**400**	**600**
Id.No. GT5-2G		463332	463323	463326	463329	463333	463324	463327	463330	463334	463325	463328	463331
Height incl. top jaw **H**	mm	150				180				210			
Height w/o top jaw **h1**	mm	110				130				160			
A		150		200		150		200		150		200	
B		125				125				125			
D		40				40				40			
Clamping force max.	kN	50				50				50			
Clamping torque max.	Nm	100				100				100			
Clamping range	mm	10 - 235	10 - 310	10 - 335	10 - 535	10 - 235	10 - 310	10 - 335	10 - 535	10 - 235	10 - 310	10 - 335	10 - 535
Number of clamps		2	3	2	3	2	3	2	3	2	3	2	3
GT5-2G guide rails*		463238	463239	463240	463242	463238	463239	463240	463242	463238	463239	463240	463242
GT5-2G drive unit*		463226				463227				463228			

* GT5-2G configurable according to customer requirements (see next page)

GT5-2G-drive unit-PREMIUM

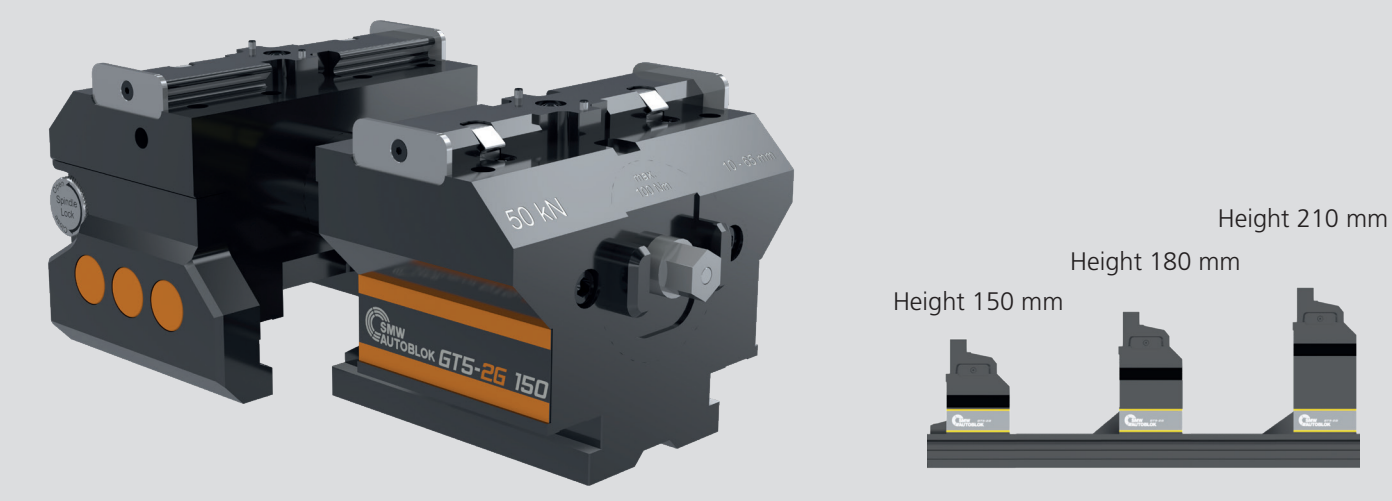

Type	Id. No.
GT5-2G-drive unit-150-PREMIUM	463226
GT5-2G-drive unit-180-PREMIUM	463227
GT5-2G-drive unit-210-PREMIUM	463228

Standard equipment GT5-2G-drive unit:

- Fixed jaw
- Moveable jaw
- Telescopic spindle

GT5-2G-guide rail

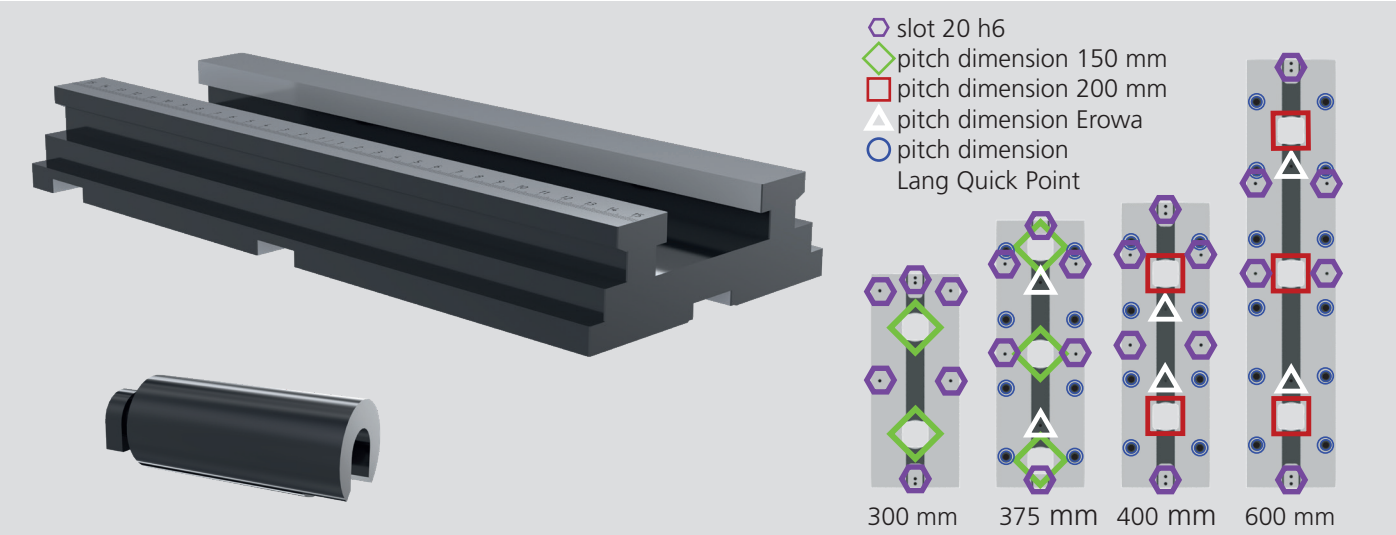

Type	Id. No.
GT5-2G-guide rail GS 300	463238
GT5-2G-guide rail GS 375	463239
GT5-2G-guide rail GS 400	463240
GT5-2G-guide rail GS 600	463242

Standard equipment GT5-2G-guide rail:

- Guide rail
- Necessary spindle extensions SV

GT5-2G stepped reversible top jaws smooth

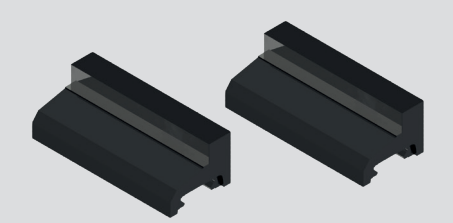

1 Set = 2 pieces

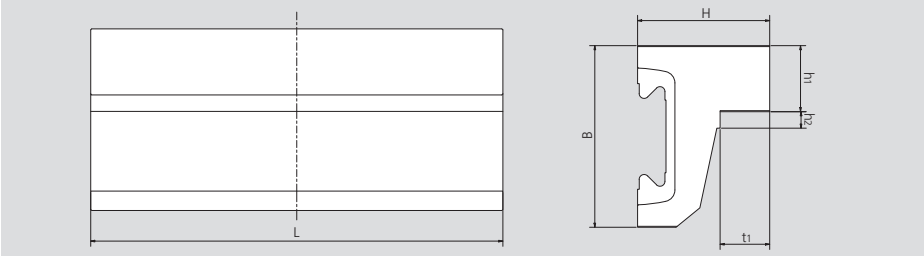

Type	Id. No.	L [mm]	H [mm]	B [mm]	h_1 [mm]	h_2 [mm]	t_1 [mm]
Stepped jaws smooth	463280	124.8	40	55	20	5	15

GT5-2G stepped reversible top jaws grip

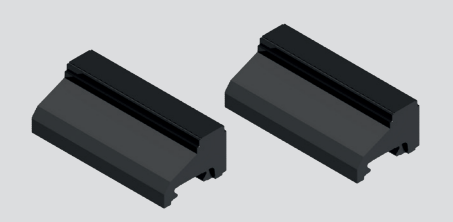

1 Set = 2 pieces

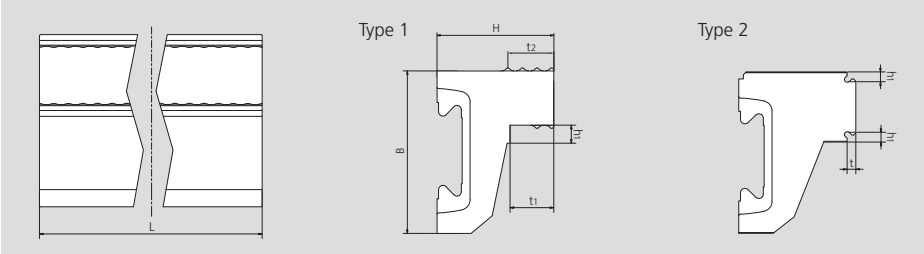

Type 1	Id. No.	L [mm]	H [mm]	B [mm]	h_1 [mm]	t_1 [mm]	t_2 [mm]
Stepped jaws grip	463284	124.8	40	54	6	15	15,75

Type 2	Id. No.	L [mm]	H [mm]	B [mm]	h_1 [mm]	t [mm]
Stepped reversible top jaws grip 3mm	463281	124.8	40	57,5	3,5	3
Stepped reversible top jaws grip 5mm	463282	124.8	40	57,5	3,5	5
Stepped reversible top jaws grip 8mm	463283	124.8	40	57,5	3,5	8

GT5-2G stepped reversible top jaws SinterGrip

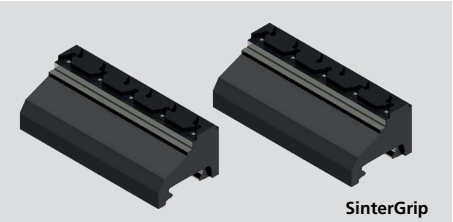

1 Set = 2 pieces
without SinterGrip clamping inserts
and mounting bolts for SinterGrip

SinterGrip

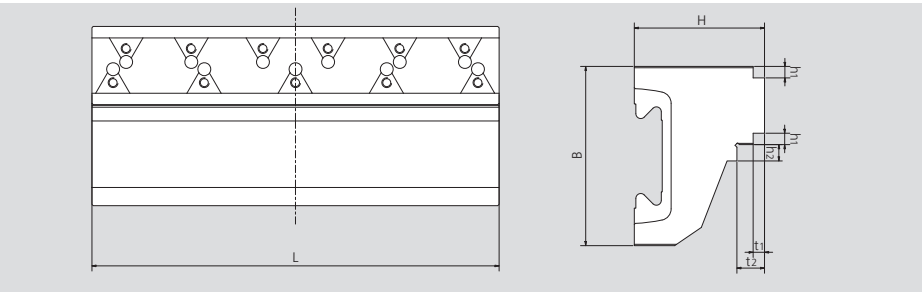

Type	Id. No.	L [mm]	H [mm]	B [mm]	h_1 [mm]	h_2 [mm]	t_1 [mm]	t_2 [mm]	SinterGrip/jaw
Stepped reversible top jaws SinterGrip	463286	124.8	40	55	3.5	5	3.5	8.5	6 + 5

GT5-2G soft jaws aluminium / steel

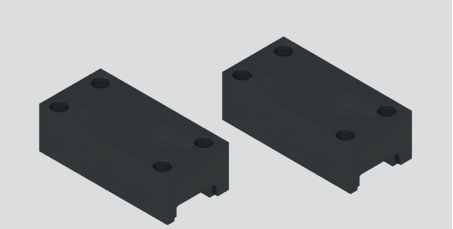

1 Set = 2 pieces incl. mounting bolts

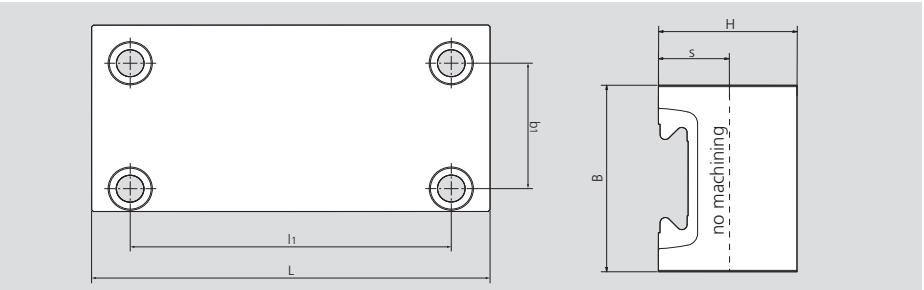

Type	Id. No.	L [mm]	l_1 [mm]	B [mm]	b_1 [mm]	H [mm]	s [mm]
Soft jaws aluminium	463287	124.8	100	60	40	40	20
Soft jaws steel	463288	124.8	100	60	40	40	20

*Attention! No quick jaw change, top jaws must be secured by mounting bolts.

GT5-2G narrow top jaws smooth

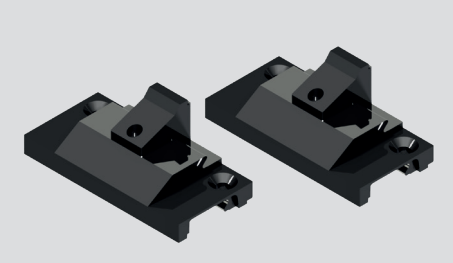

1 Set = 2 pieces

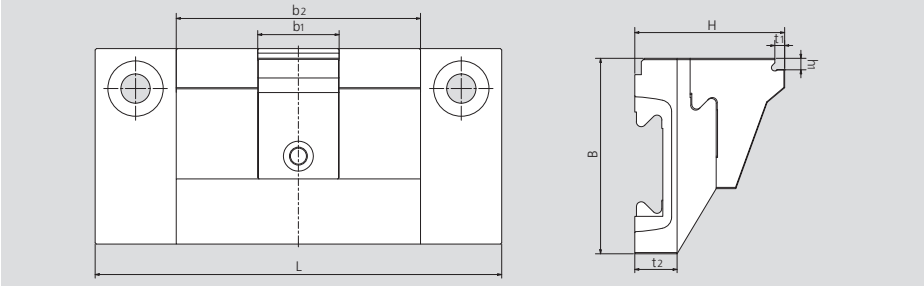

Type	Id. No.	L [mm]	H [mm]	B [mm]	b_1 [mm]	b_2 [mm]	h_1 [mm]	t_1 [mm]	t_2 [mm]
Adapter plate (incl. mounting bolts)	463289	124.8	-	60	-	75	-	-	13
Narrow jaw smooth 25 mm width	463290	124.8	46	60	25	75	3.5	3	13
Narrow jaw smooth 35 mm width	463291	124.8	46	60	35	75	3.5	3	13
Narrow jaw smooth 45 mm width	463292	124.8	46	60	45	75	3.5	3	13
Narrow jaw smooth 55 mm width	463293	124.8	46	60	55	75	3.5	3	13
Narrow jaw smooth 65 mm width	463294	124.8	46	60	65	75	3.5	3	13
Narrow jaw smooth 75 mm width	463295	124.8	46	60	75	75	3.5	3	13
Narrow jaw smooth 85 mm width	463296	124.8	46	60	85	75	3.5	3	13
Narrow jaw smooth 95 mm width	463297	124.8	46	60	95	75	3.5	3	13

GT5-2G narrow top jaws grip

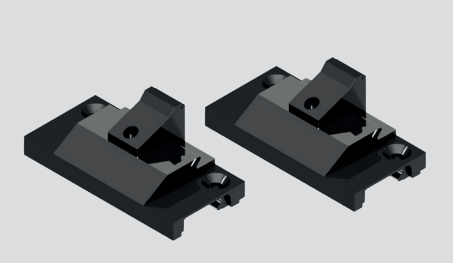

1 Set = 2 pieces

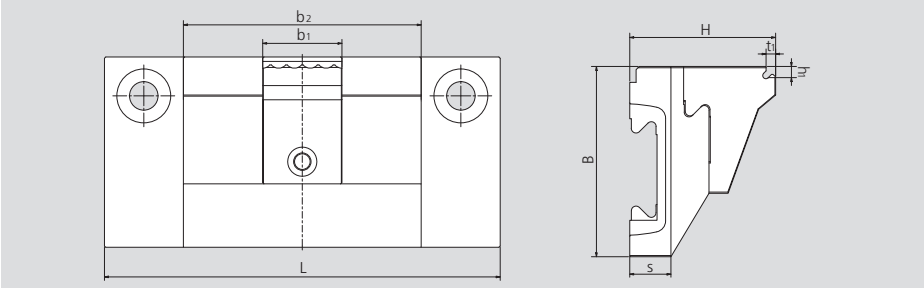

Type	Id. No.	L [mm]	H [mm]	B [mm]	b_1 [mm]	b_2 [mm]	h_1 [mm]	t_1 [mm]	s [mm]
Adapter plate (incl. mounting bolts)	463289	124.8	-	60	-	75	-	-	13
Narrow top jaws grip 25 mm width	463298	124.8	46	60	25	75	3.5	3	13
Narrow top jaws grip 35 mm width	463299	124.8	46	60	35	75	3.5	3	13
Narrow top jaws grip 45 mm width	463300	124.8	46	60	45	75	3.5	3	13
Narrow top jaws grip 55 mm width	463301	124.8	46	60	55	75	3.5	3	13
Narrow top jaws grip 65 mm width	463302	124.8	46	60	65	75	3.5	3	13
Narrow top jaws grip 75 mm width	463303	124.8	46	60	75	75	3.5	3	13
Narrow top jaws grip 85 mm width	463304	124.8	46	60	85	75	3.5	3	13
Narrow top jaws grip 95 mm width	463305	124.8	46	60	95	75	3.5	3	13

GT5-2G Pendulum jaws

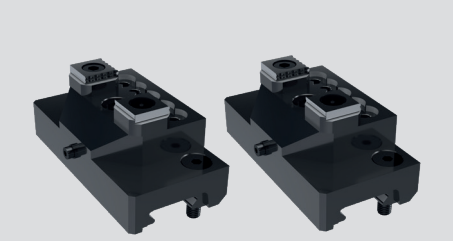

1 Set = 2 pieces top jaws

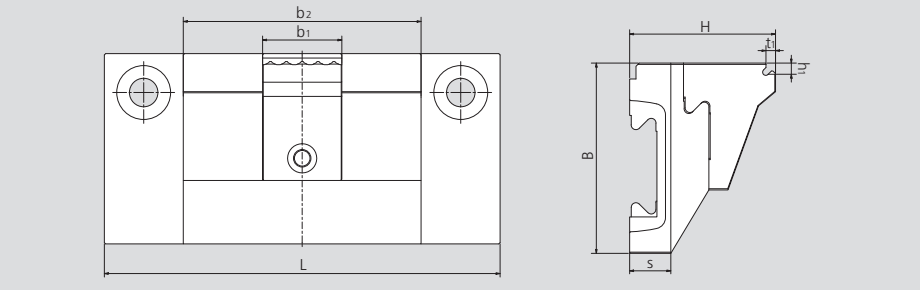

Type	Id.-Nr.	Standard equipment	L [mm]	H [mm]	B [mm]	b_1 [mm]	b_2 [mm]	h_1 [mm]	t_1 [mm]	t_2 [mm]
Pendulum jaws complete set 80 mm	463345	Adapter plate fixed, adapter plate pendulum, Pendulum and fixed plate 80 mm + 4 x Multigrip and fixing material								
Pendulum jaws complete set 125 mm	463346	Adapter plate fixed, adapter plate pendulum, Pendulum and fixed plate 125 mm + 4 x Multigrip and fixing material								
Pendulum jaws complete set 175 mm	463347	Adapter plate fixed, adapter plate pendulum, Pendulum and fixed plate 175 mm + 4 x Multigrip and fixing material								
Pendulum jaws adapter set	463348	Adapter plate fixed, adapter plate pendulum and fixing material								
Pendulum plate set 80 mm	463349	Pendulum plate and fixed plate width 80 mm								
Pendulum plate set 125 mm	463350	Pendulum plate and fixed plate width 125 mm								
Pendulum plate set 175 mm	463351	Pendulum plate and fixed plate width 175 mm								
Multigrip clamping insert (1 piece)	463344	Multi grip clamping insert height 12 mm incl. mounting screw								

GT5-2G Pull-down jaws

1 Set = 2 pieces top jaws

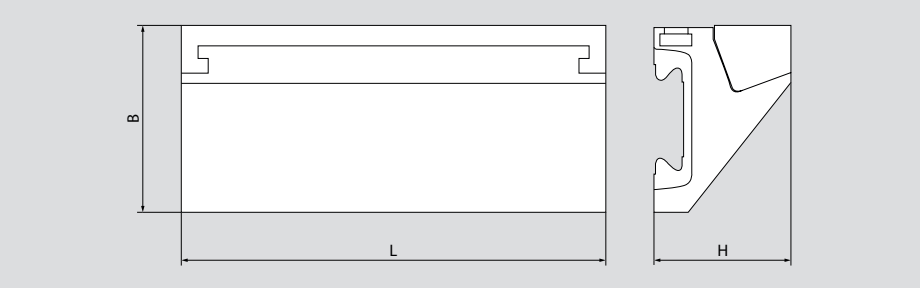

Type	Id.-Nr.	Standard equipment	L [mm]	L1 [mm]	B [mm]
Pull-down jaws complete set 80 mm	463357		125	40	55

Clamping range extension kit

Each kit consisting of:
2x Guide rail extension GSV
and 1x Spindle extension SV

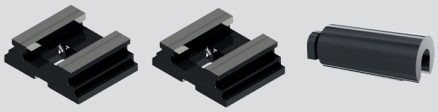

Type	Id. No.	L [mm]
Clamping range extension kit 150	463276	150
Clamping range extension kit 200	463277	200
Clamping range extension kit 300	463278	300
Clamping range extension kit 400	463279	400

Guide rail extension GSV

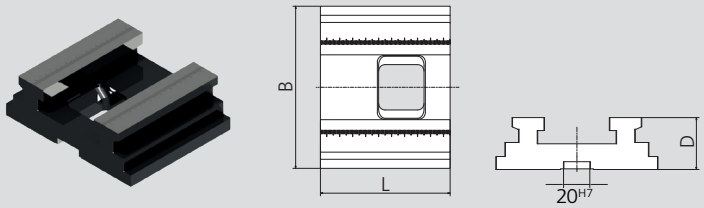

Type	Id.-No.	B [mm]	D [mm]	L [mm]
GSV 75	463272	125	40	75
GSV 100	463273	125	40	100
GSV 150	463274	125	40	150
GSV 200	463275	125	40	200

Spindle extension SV

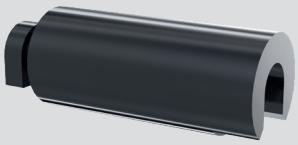

Type	Id. No.	L [mm]
SV 50	463267	50
SV 100	463268	100
SV 200	463269	200
SV 300	463270	300
SV 400	463271	400

*Spindle extension: max. total 1200 mm / max. 4 pcs. spindle extensions

Straddle-clamp TSP + T-nut + cyl.screw

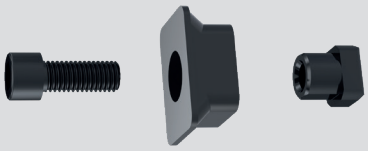

Type	Id.-No.	slot widht [mm]
TSP 14	463307	14
TSP 16	463308	16
TSP 18	463309	18

Adaptation set for zero point clamping system

Each set consisting of:
1x Adaption ring Ø40 to Ø25,
1x Straddle insert for zero point system
1x Clamping pin M12
1x Countersink screw

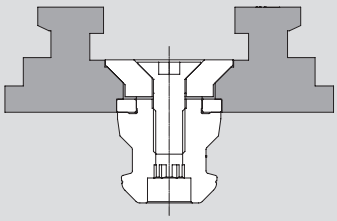

Type	Id. No.
Adaption set for zero point clamping system - clamping pin type A	463320
Adaption set for zero point clamping system - clamping pin type B	463321
Adaption set for zero point clamping system - clamping pin type C	463322

High precision key

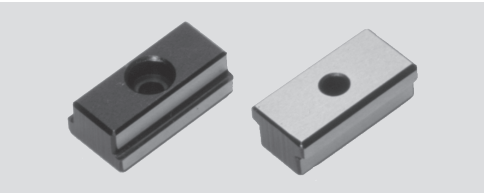

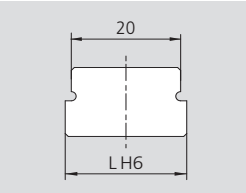

Type	Id. No.	L [mm]
High precision key 20-14	209058	14
High precision key 20-16	209581	16
High precision key 20-18	208916	18
High precision key 20-22	209582	22

Torque wrench

Each kit consisting of:
1x Torque wrench + 1x socket 13 mm

Type	Id. No.
Torque wrench 20 - 100 Nm	463318

GT5

5-axis vise

- Ideal suitable for OP 10 use
- High level of accessibility

Application/customer benefits

- 5-axis vise, ideal suitable for raw part clamping OP 10
- Jaws with SinterGrip clamping inserts as a standard
- High level of accessibility due to the extra compact design
- High clamping force
- Optional workpiece stop

Technical features

- High clamping force (until 35 kN)
- Jaws with SinterGrip clamping inserts for clamping of workpieces with lowest depth and without pre-marking
- Clamping range 100 mm or 200 mm
- Optional: Interface for zero point clamping system APS / WPS / ZeroAct

Standard equipment

5-axis vise with wrench key, 1 pair of positioning keys for mounting, 1 pair of SinterGrip top jaws, 10 pcs. SinterGrip inserts for steel, key T9, base plate not included in the scope of delivery

SinterGrip
Page 116

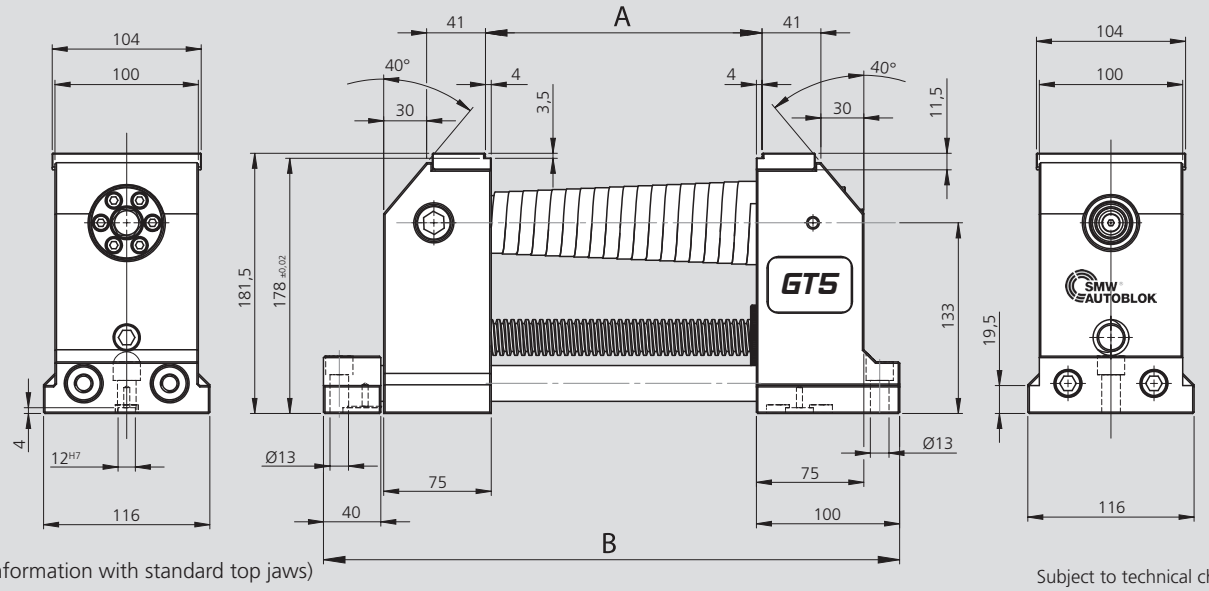

(Technical information with standard top jaws)

Subject to technical changes.

Order review

Type	Id. No.	A	B	Weight [kg]
GT5-100	77585011	100	312	23
GT5-200	77585012	200	412	25

Clamping force diagram

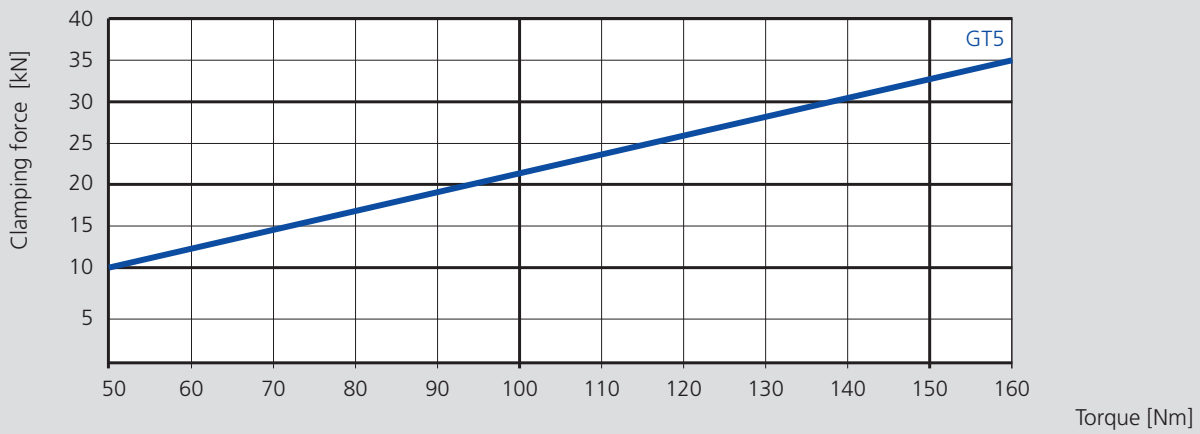

GT5 base plate with interface for zero point clamping system

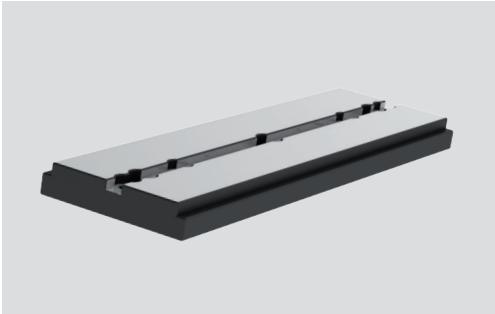

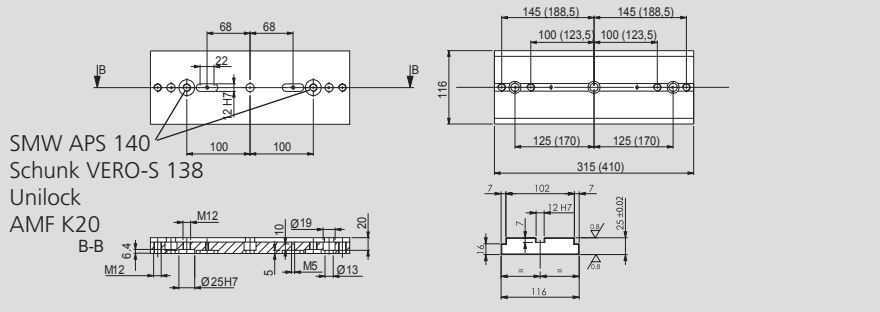

Type	Id. No.
GT5 100	58502010
GT5 200	58502020

GT5 top jaws for clamping inserts SinterGrip

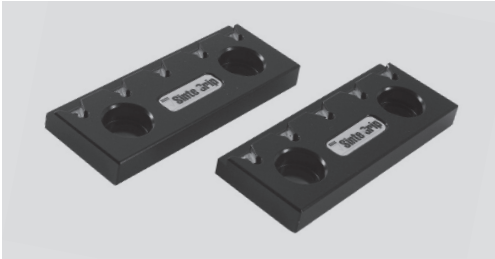

Set consisting of 2 pieces top jaws for SinterGrip

SinterGrip
Page 116

Type	Id. No.
GT5	58451519

GT5 top jaws smooth / serrated

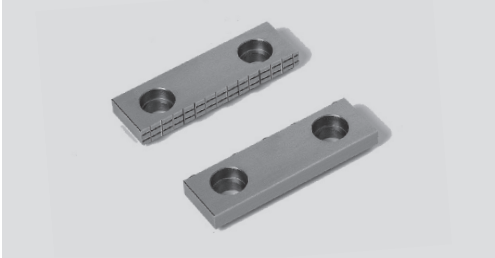

Smooth and serrated
Set consisting of 2 pieces serrated and smooth

Type	Id. No.
GT5	58504119

GT5 torque wrench

For precise adjustment of the clamping force of the GT5

Type	Id. No.
GT5	51501006

ST5-2G

Sealed self-centering vise

Extra large clamping range
maximum flexibility
for O.D. and I.D. clamping

2 top jaw versions:
BASIC – with Gripper top jaws
PREMIUM – with SinterGrip top jaws
Reversible jaws for lowest clamping depth of workpieces and without pre-marking

Premium SinterGrip Top jaws

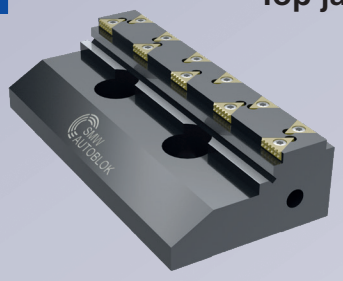

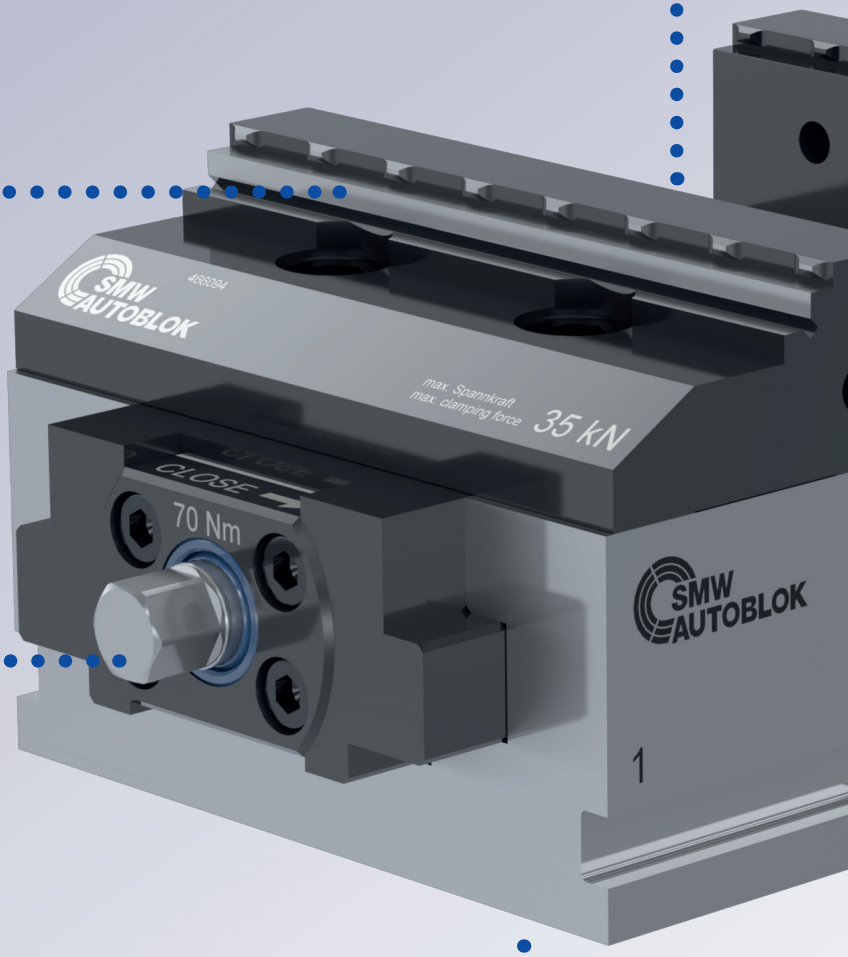

Manual actuation
sealed from both sides with highest transmission offers highest clamping forces for maximum hold of the workpiece and highest process reliability

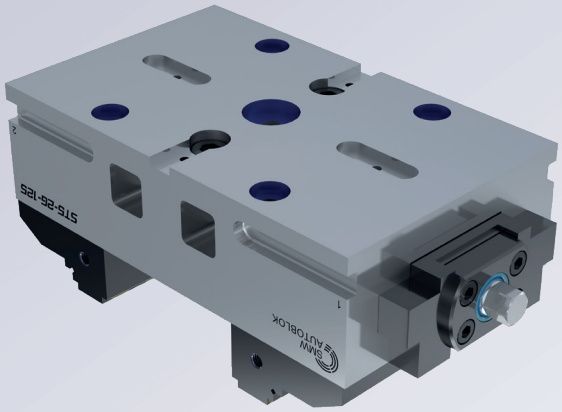

Interfaces
for zero point clamping systems and mounting holes as a standard

▶ from SMW-AUTOBLOK

Sealing
for protection against contamination

Ideal usable
for automation and pallet systems

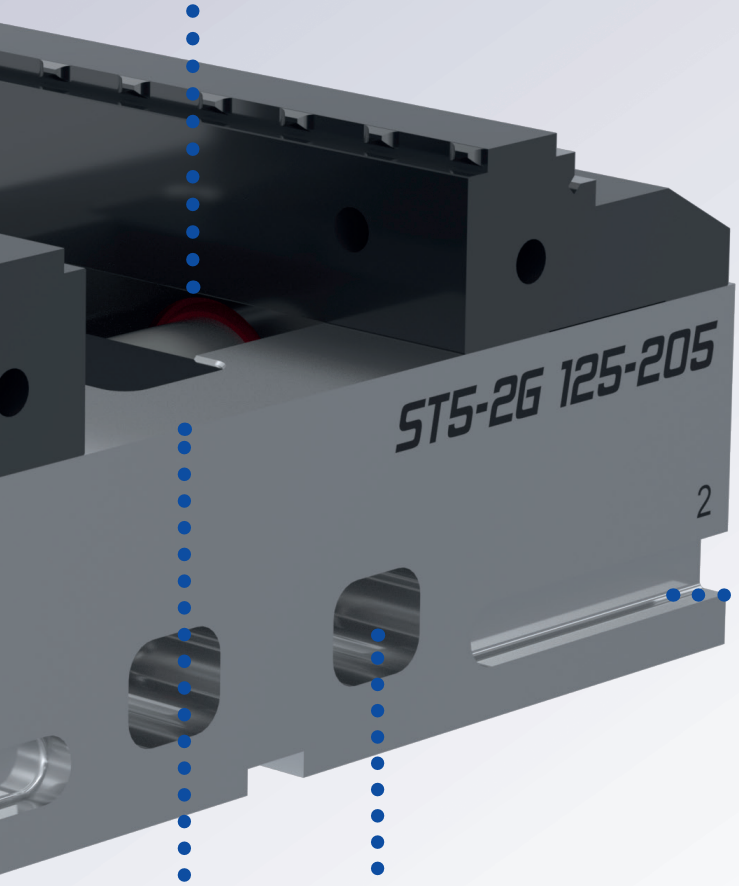

Flexible mounting
on the machine table
optional via clamps

Extra large chip evacuation windows
guarantees optimized chip flow

Guideway hardened and precision-ground
for highest precision and repeatability

ST5-2G 080

Self-centering vise

- Sealed – protected spindle
- Self-centering

Application/customer benefits

- Precision 5-axis self centering vise with highest repeatability
- Sealed spindle for protection against contamination
- Compact design for best accessibility and with large chip evacuation windows
- PREMIUM: Jaws with SinterGrip clamping inserts for lowest clamping depth of the workpiece without pre-marking
- Large clamping range
- Ideal for OP 10 and OP 20

SinterGrip
Page 116

Technical features

- Self-centering
- Manual actuation from both sides
- Clamping range 0 to 127 mm
- Arithmetic total of all moving clamping jaws up to 18 kN (at 35 Nm)
- Jaw width 80 mm
- Interface for zero point clamping systems APS / WPS / ZeroAct and Lang 52 mm as a standard

Standard equipment

5-axis vise with wrench, BASIC: 1 set top jaws Gripper
PREMIUM: SinterGrip top jaws with 8 pieces SinterGrip clamping inserts and 8 pieces protection cover and mounting screws

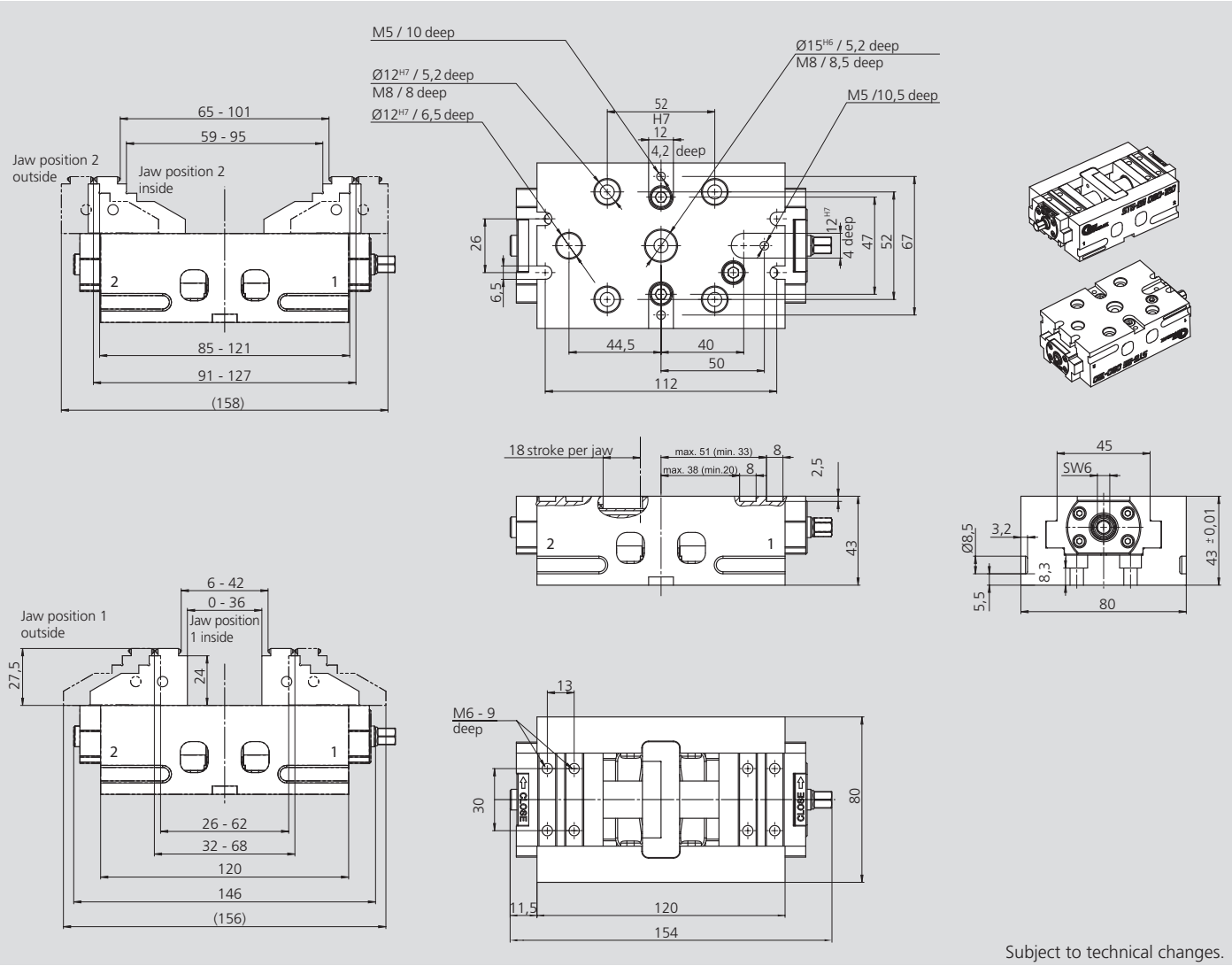

Subject to technical changes.

Order review

Type	Clamping range [mm]	Id. No.
ST5-2G 080 BASIC with gripper jaws	0 - 127	466110
ST5-2G 080 PREMIUM with SinterGrip jaws STD	0 - 127	466111
ST5-2G 080 PREMIUM with SinterGrip jaws ALU	0 - 127	466111A
ST5-2G 080 PREMIUM with SinterGrip jaws HRC	0 - 127	466111H
ST5-2G 080 without top jaws	0 - 127	466065

Self-centering vise

ST5-2G 125

- Sealed – protected spindle
- Self-centering

Application/customer benefits

- Precision 5-axis self centering vise with highest repeatability
- Sealed spindle for protection against contamination
- Compact design for best accessibility and with large chip evacuation windows
- PREMIUM: Jaws with SinterGrip clamping inserts for lowest clamping depth of the workpiece without pre-marking
- Large clamping range
- Ideal for OP 10 and OP 20

SinterGrip
Page 116

Technical features

- Self-centering
- Manual actuation from both sides
- Clamping range 0 to 208 mm
- Arithmetic total of all moving clamping jaws up to 35 kN (at 70 Nm)
- Jaw width 125 mm
- Interface for zero point clamping systems APS / WPS / ZeroAct and Lang 96 mm as a standard

Standard equipment

5-axis vise with wrench, BASIC: 1 set top jaws Gripper
PREMIUM: SinterGrip top jaws with 12 pieces SinterGrip clamping inserts and 12 pieces protection cover and mounting bolts

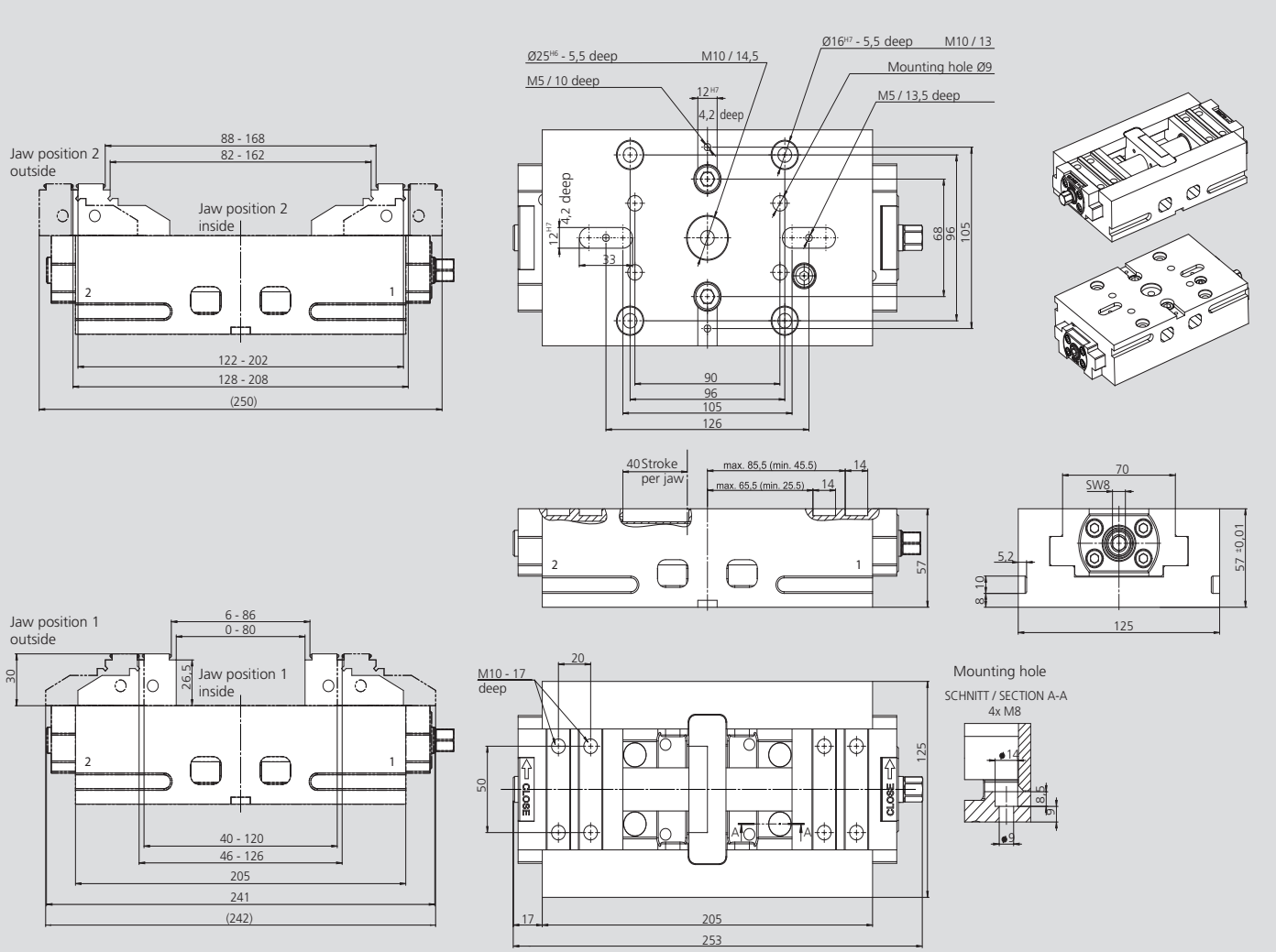

Subject to technical changes.

Order review

Type	Clamping range [mm]	Id. No.
ST5-2G 125 BASIC with gripper jaws	0 - 208	466120
ST5-2G 125 PREMIUM with SinterGrip jaws STD	0 - 208	466121
ST5-2G 125 PREMIUM with SinterGrip jaws ALU	0 - 208	466121A
ST5-2G 125 PREMIUM with SinterGrip jaws HRC	0 - 208	466121H
ST5-2G 125 without top jaws	0 - 208	466056

ST5-2G S 125

Self-centering vise – short version

- Sealed – protected spindle
- Self-centering

Application/customer benefits

- Precision 5-axis centric clamping vise with highest repeatability
- Sealed spindle for protection against contamination
- Compact design for best accessibility and with large chip evacuation windows
- PREMIUM: Jaws with SinterGrip clamping inserts for lowest clamping depth of the workpiece without pre-marking
- Shorter version
- Ideal for OP 10 and OP 20

SinterGrip
Page 116

Technical features

- Self-centering
- Manual actuation from both sides (SW13/SW 8)
- Clamping range 0 to 168 mm
- Arithmetic total of all moving clamping jaws up to 35 kN (at 70 Nm)
- Jaw width 125 mm
- Interface for zero point clamping systems APS / WPS / ZeroAct and Lang 96 mm as a standard

Standard equipment

5-axis vise with wrench, BASIC: 1 set top jaws Gripper
PREMIUM: SinterGrip top jaws with 12 pieces SinterGrip clamping inserts and 12 pieces protection cover and mounting bolts

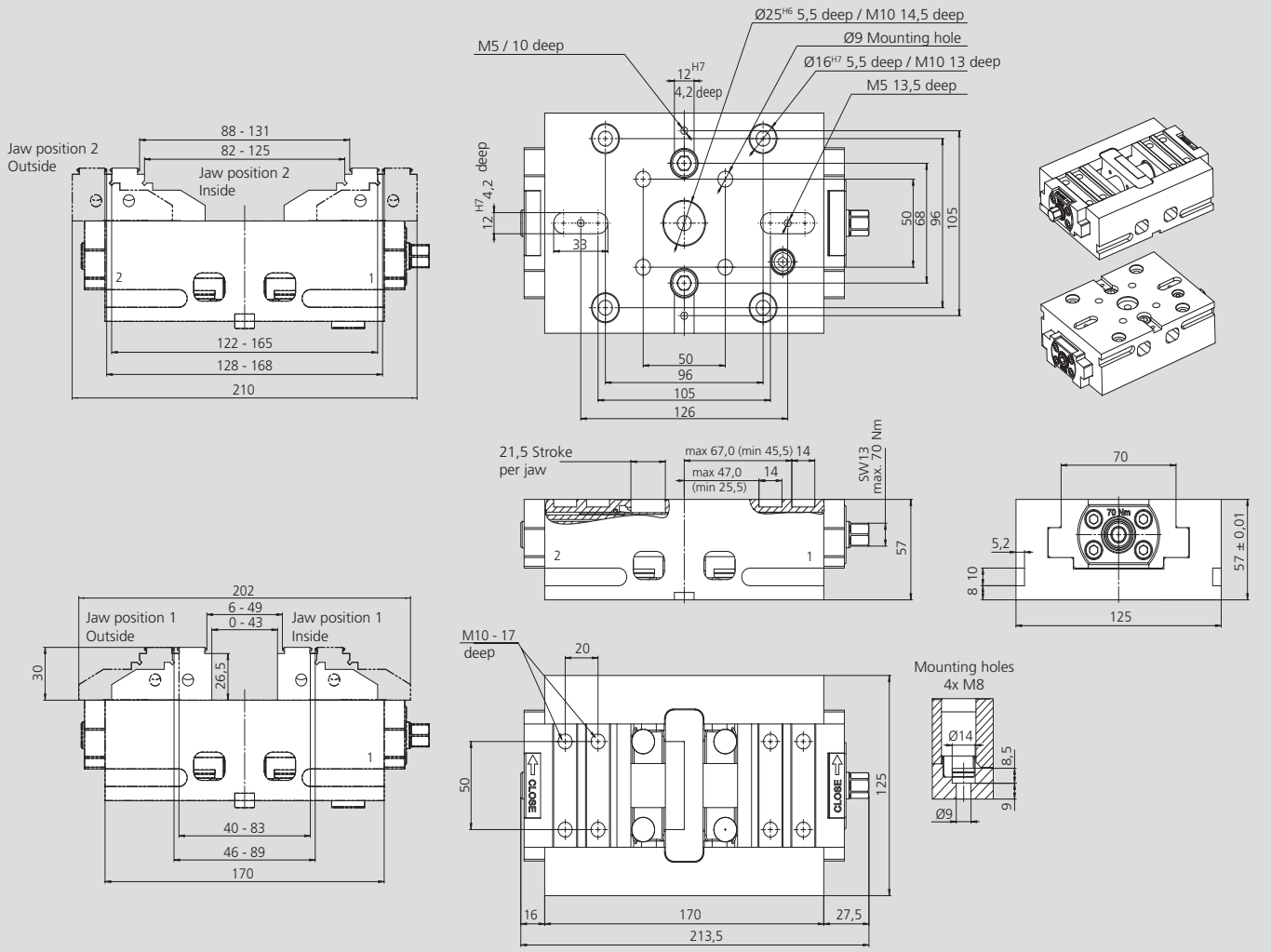

Subject to technical changes.

Order review

Type	Clamping range [mm]	Id. No.
ST5-2G S 125 BASIC with gripper jaws	0 - 168	466058
ST5-2G S 125 PREMIUM with SinterGrip jaws STD	0 - 168	466059
ST5-2G S 125 PREMIUM with SinterGrip jaws ALU	0 - 168	466059A
ST5-2G S 125 PREMIUM with SinterGrip jaws HRC	0 - 168	466059H
ST5-2G S 125 without top jaws	0 - 168	466057

Self-centering vise – long version

ST5-2G L 125

- Sealed – protected spindle
- Self-centering

Application/customer benefits

- Precision 5-axis centric clamping vise with highest repeatability
- Sealed spindle for protection against contamination
- Compact design for best accessibility and with large chip evacuation windows
- PREMIUM: Jaws with SinterGrip clamping inserts for lowest clamping depth of the workpiece without pre-marking
- Extra large clamping range
- Ideal for OP 10 and OP 20

SinterGrip
Page 116

Technical features

- Self-centering
- Manual actuation from both sides (SW13/SW 8)
- Clamping range 0 to 304 mm
- Arithmetic total of all moving clamping jaws up to 35 kN (at 70 Nm)
- Jaw width 125 mm
- Interface for zero point clamping systems APS / WPS / ZeroAct and Lang 96 mm as a standard

Standard equipment

5-axis vise with wrench, BASIC: 1 set top jaws Gripper
PREMIUM: SinterGrip top jaws with 12 pieces SinterGrip clamping inserts and 12 pieces protection cover and mounting bolts

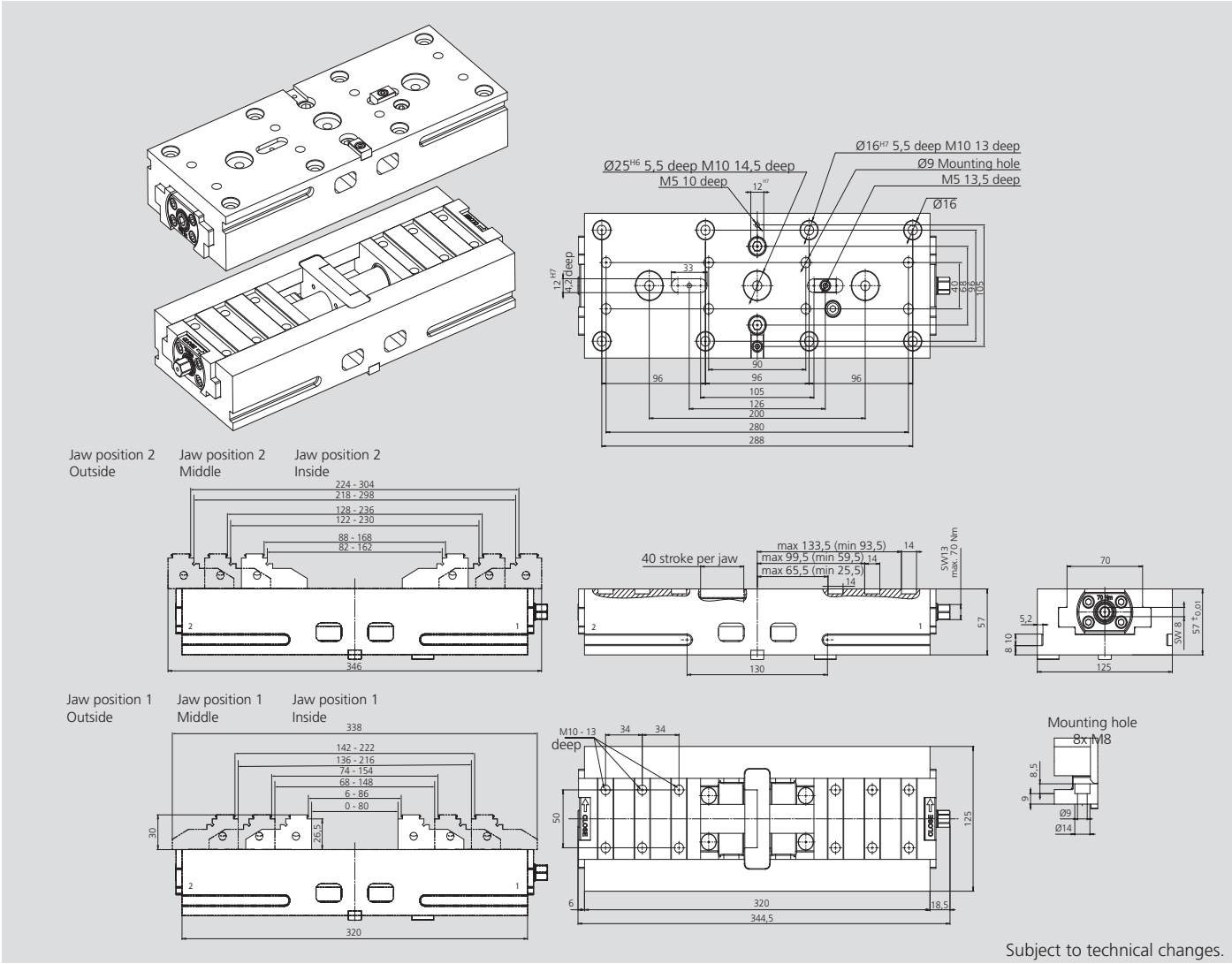

Subject to technical changes.

Order review

Type	Clamping range [mm]	Id. No.
ST5-2G L 125 BASIC with gripper jaws	0 - 304	466260
ST5-2G L 125 PREMIUM with SinterGrip jaws STD	0 - 304	466261
ST5-2G L 125 PREMIUM with SinterGrip jaws ALU	0 - 304	466261A
ST5-2G L 125 PREMIUM with SinterGrip jaws HRC	0 - 304	466261H
ST5-2G L 125 without top jaws	0 - 304	466224

ST5-2G top jaws BASIC gripper

1 set = 2 pieces; incl. 4 pcs. mounting screws

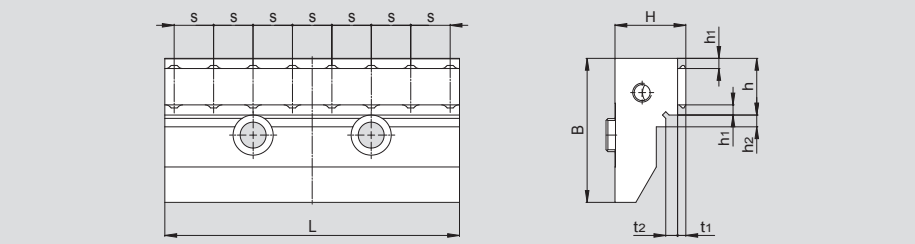

Type	Id. No.	L	B	H	s	h	h1	h2	t1	t2
ST5-2G 080	466107	79.8	47	27.5	10.5 (7x)	18.5	3	5	3.5	4.5
ST5-2G 125	466094	124.8	61	30	16.7 (7x)	24	3	5	3.5	5

ST5-2G top jaws PREMIUM SinterGrip

SinterGrip Page 116

1 set = 2 pieces, without SinterGrip clamping inserts incl. 4 pcs. mounting screws

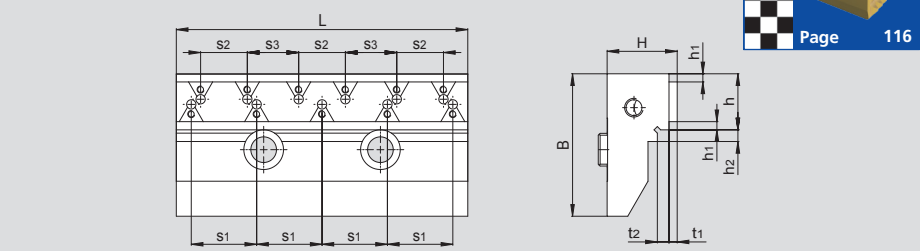

Type	Id. No.	L	B	H	s1	s2	s3	h	h1	h2	t1	t2	SinterGrip / jaw
ST5-2G 080	466108	79.8	47	27.5	27 (2x)	22 (3x)	-	18.5	3.5	5	3.5	4.5	4+3
ST5-2G 125	466095	124.8	61	30	28 (4x)	20 (3x)	22 (2x)	24	3.5	5	3.5	5	6+5

ST5-2G top jaws BASIC gripper, extended clamping depth

1 set = 2 pieces; incl. 4 pcs. mounting screws

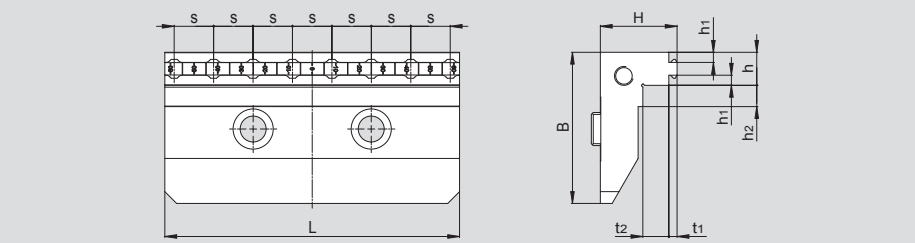

Type	Id. No.	L	B	H	s	h	h1	h2	t1	t2
ST5-2G 080	466187	77	41	22	10.5 (7x)	12	3	8	3.5	8
ST5-2G 125	466185	124.8	59.5	32	16.7 (7x)	14	3	9	3.5	10.5

ST5-2G top jaws PREMIUM SinterGrip, extended clamping depth

SinterGrip Page 116

1 set = 2 pieces, without SinterGrip clamping inserts incl. 4 pcs. mounting screws

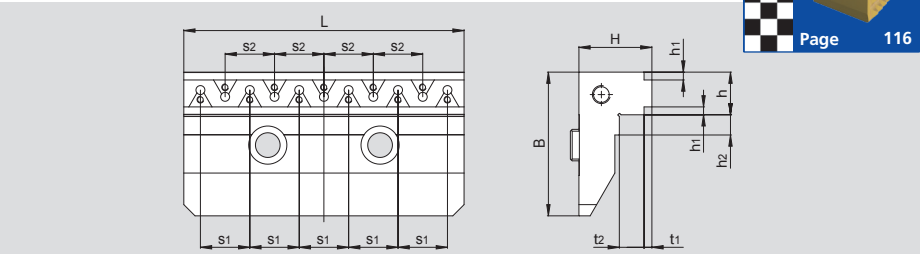

Type	Id. No.	L	B	H	s1	s2	h	h1	h2	t1	t2	SinterGrip / jaw
ST5-2G 080	466188	77	41	22	21 (3x)	21 (2x)	19	3.5	8	3.5	8	4+3
ST5-2G 125	466186	124.8	59.5	32	22 (5x)	22 (4x)	19	3.5	9	3.5	10.5	6+5

ST5-2G top jaws BASIC gripper, narrow design

1 set = 2 pieces; incl. 4 pcs. mounting screws

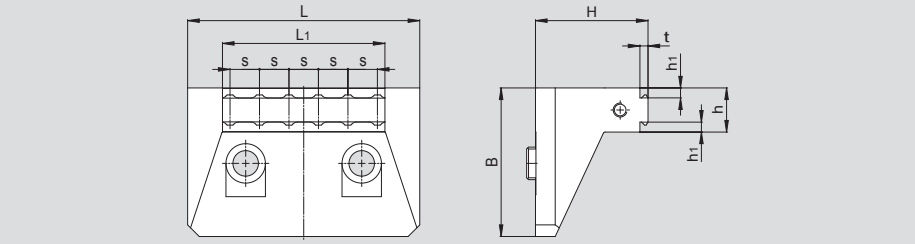

Type	Id. No.	L	B	H	L1	s	t	h	h1
ST5-2G 080	466164	60	47	35.5	45	12.7	3.5	19	3
ST5-2G 125	466166	100	64	48.5	70	12.7	3.5	19	3

2

ST5-2G top jaws PREMIUM SinterGrip, narrow design

SinterGrip Page 116

1 set = 2 pieces, without SinterGrip clamping inserts incl. 4 pcs. mounting screws

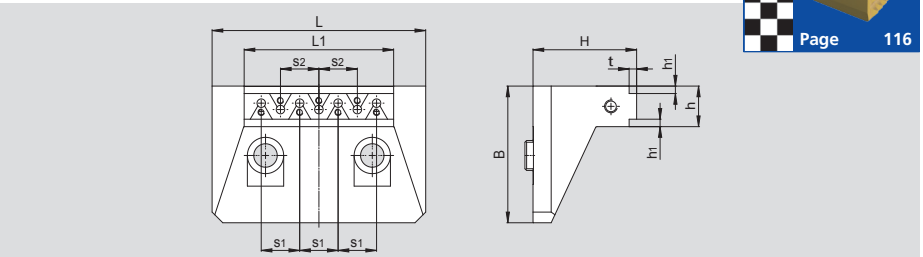

Type	Id. No.	L	B	H	L1	s1	s2	h	h1	t	SinterGrip per jaw
ST5-2G 080	466165	60	47	35.5	45	16	16	19	3.5	3.5	3+2
ST5-2G 125	466167	100	64	48.5	70	18	18	19	3.5	3.5	4+3

ST5-2G top jaws, 5-axis smooth

1 set = 2 pieces; incl. 4 pcs. mounting screws

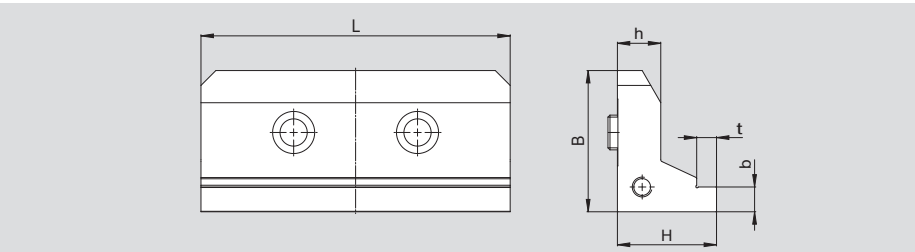

Type	Id. No.	L	B	H	h	b	t
ST5-2G 080	466200	79.8	38.5	30	15.5	8	6
ST5-2G 125	466199	124.8	57	40	17.5	10	8

ST5-2G soft top jaws, low design, material: 1.0503

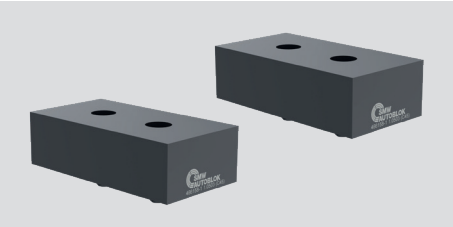

1 set = 2 pieces; incl. 4 pcs. mounting screws

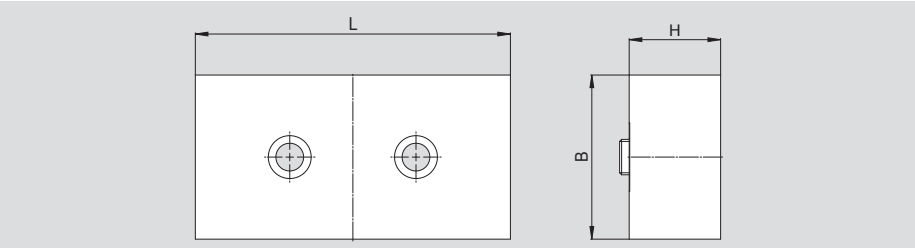

Type	Id. No.	L	B	H
ST5-2G 080	466157-1	79.8	50	29.7
ST5-2G 080*	466333-1	79.8	50	29.7
ST5-2G 125	466158-1	124.8	65	36.2
ST5-2G 125*	466334-1	124.8	65	36.2

* Aluminium version

ST5-2G soft top jaws, high design, material 1.0503

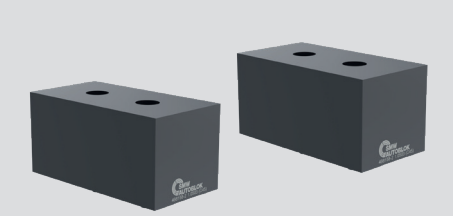

1 set = 2 pieces; incl. 4 pcs. mounting screws

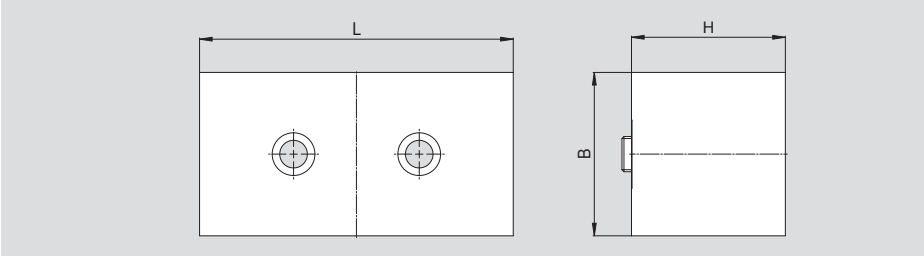

Type	Id. No.	L	B	H
ST5-2G 080	466157-2	79.8	55	52.7
ST5-2G 080*	466333-2	79.8	55	52.7
ST5-2G 125	466158-2	124.8	65	61.2
ST5-2G 125*	466334-2	124.8	65	61.2

* Aluminium version

ST5-2G top jaws BASIC gripper

1 set = 2 pieces; incl. 4 pcs. mounting screws

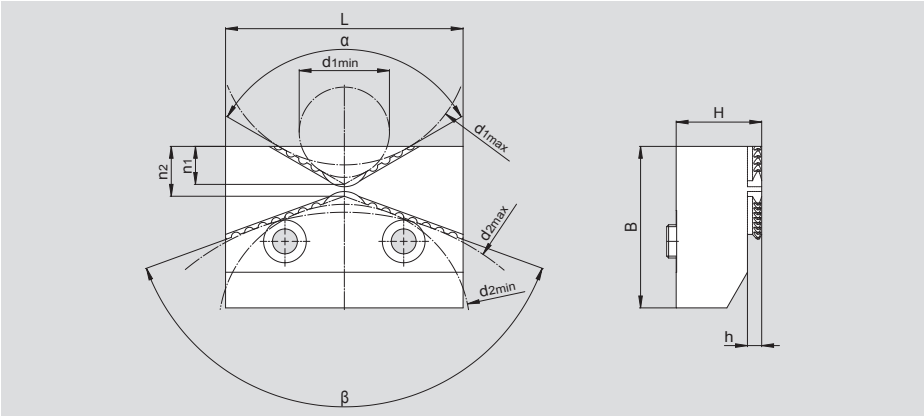

Type	Id. No.	L	B	H	h	d1min	d1max	d2min	d2max	n1	n2	α	β	Clamping range
ST5-2G 080	466282	65	45	20	4	18.2	67.5	65.8	124	10	15	120°	140°	Ø020-120
ST5-2G 125	466201	100	68	36	6	38	106	106	210	16	21	120°	140°	Ø038-210

ST5-2G top jaws, smooth, prism jaws

1 set = 2 pieces; incl. 4 pcs. mounting screws

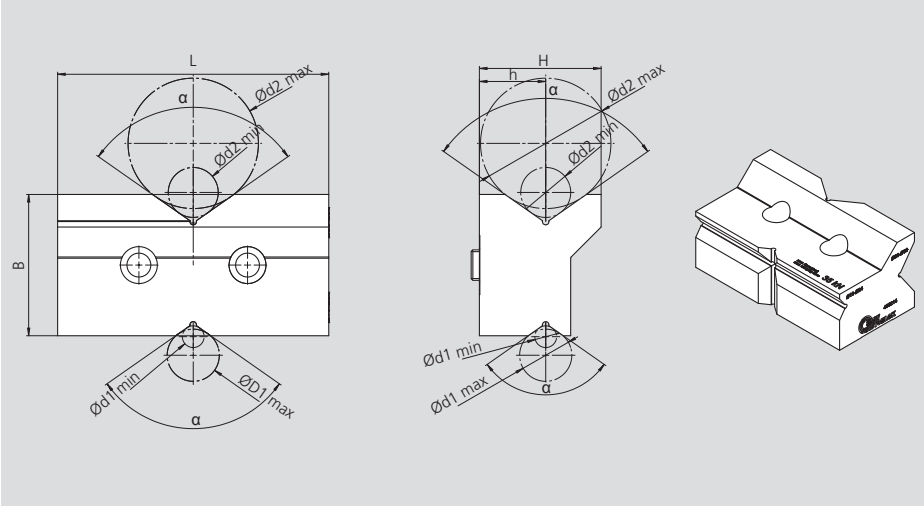

Type	Id. No.	L	B	H	h	d1min	d1max	d2min	d2max	α	Clamping range
ST5-2G 080	466215	79.8	48	38	22	5	13	13	36	110°	Ø5-36
ST5-2G 125	466214	124.8	65	56	30.5	10	24	23	60	110°	Ø10-60

ST5-2G pull-down jaws

1 set = 2 pull-down jaws, incl. 4 pcs. mounting screws

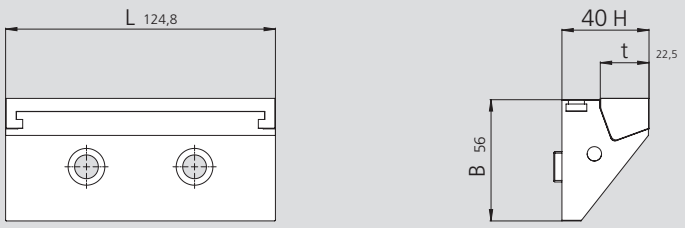

Type	Id. No.
ST5-2G 125 pull-down jaws	466401

ST5-2G pendulum jaws, sealed

1 pendulum jaw, incl. 2 pcs. mounting screws
without grip inserts and stop pins

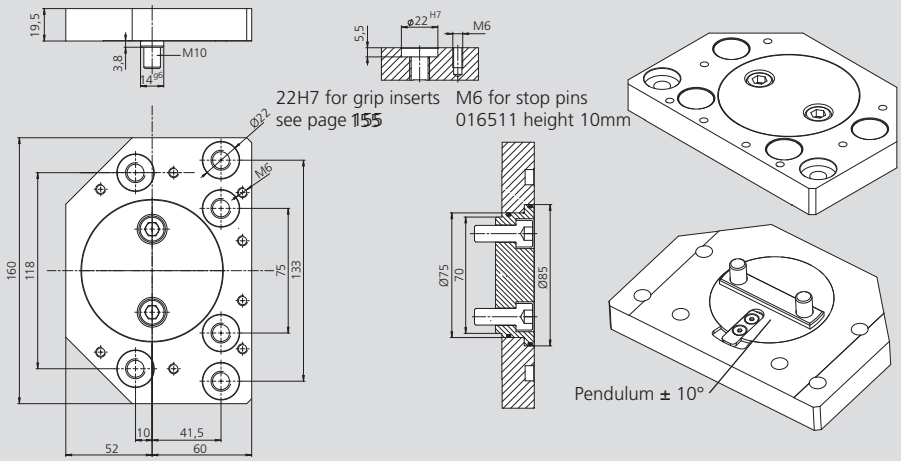

Type	Id. No.
ST5-2G 125 pendulum jaws	466255

ST5-2G pendulum fix jaws, sealed

1 pendulum fix jaw , incl. 2 pcs. mounting screws
without grip inserts and stop pins

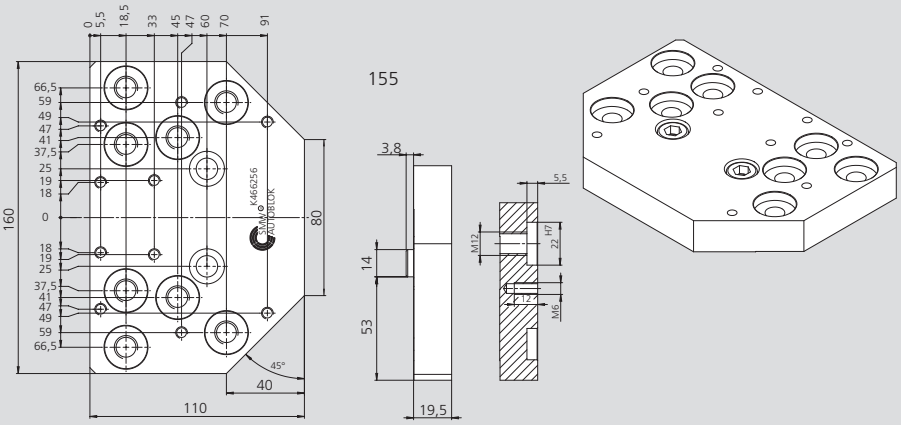

Type	Id. No.
ST5-2G 125 pendulum fix jaws	466256

Application examples

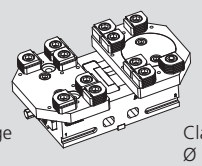

Clamping range
Ø 5 - 220 mm

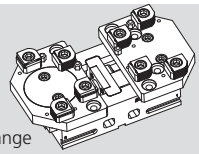

Clamping range
Ø 50 - 280 mm

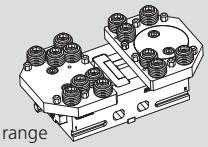

Clamping range
Ø 55 - 250 mm

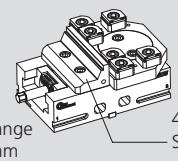

Clamping range
Ø 6 - 210 mm

466199
Smooth jaw

Mounting devices for ST5-2G 080

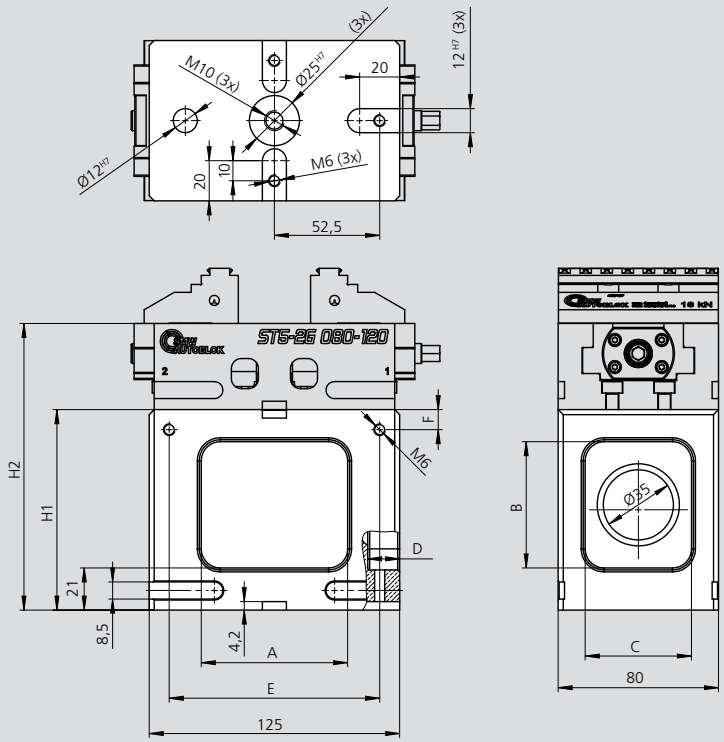

Subject to technical changes.

ST5-2G not included in scope of delivery.

Type	Id. No.	H1	H2	A	B	C	D	E	F
ST5-2G 080	466327	60	103	75	25	55	16	105	10
ST5-2G 080	466328	100	143	75	65	55	16	105	10

Mounting devices for ST5-2G 125-205

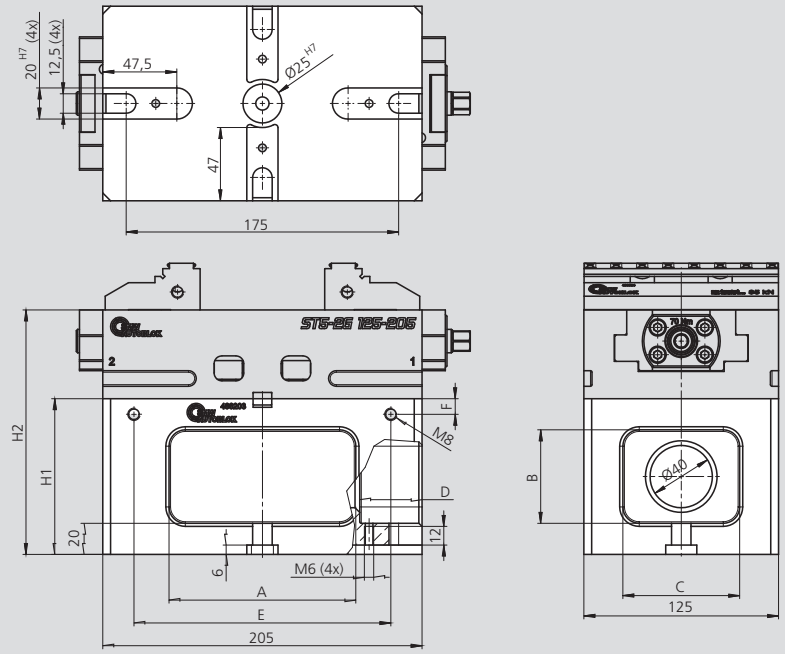

Subject to technical changes.

ST5-2G not included in scope of delivery.

Type	Id. No.	H1	H2	A	B	C	D	E	F
ST5-2G H60	466202	60	117	120	40	70	29/16	145	20
ST5-2G H100	466203	100	157	120	60	75	40	165	10
ST5-2G H120	466204	120	177	120	75	75	40	165	20

Mounting devices for ST5-2G S 125-170

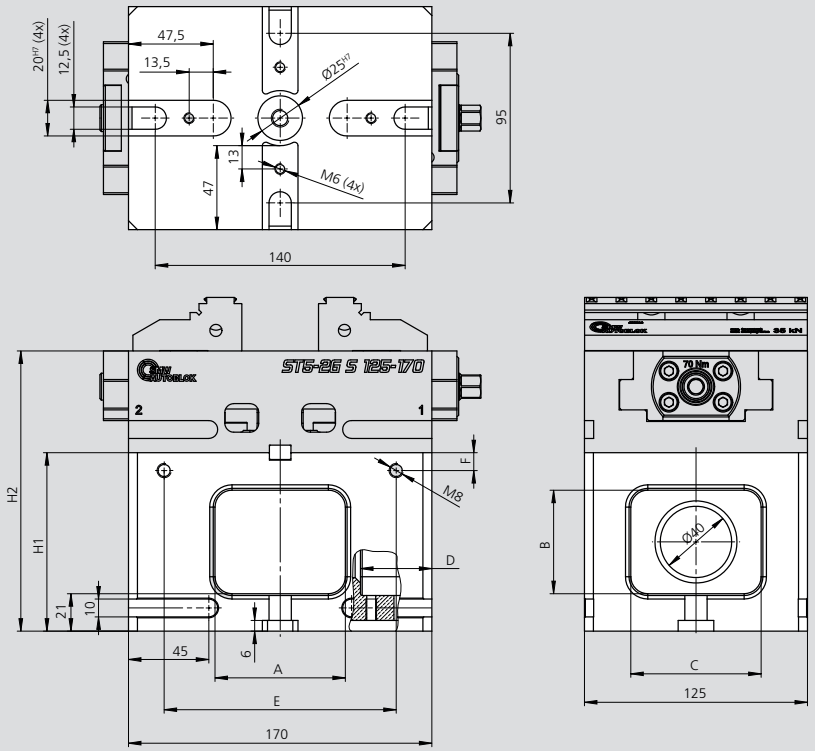

Subject to technical changes.

ST5-2G not included in scope of delivery.

Type	Id. No.	H1	H2	A	B	C	D	E	F
ST5-2G S 125-170	466321	60	117	75	25	75	29	130	10
ST5-2G S 125-170	466322	100	157	75	60	75	40	130	10
ST5-2G S 125-170	466323	120	177	75	80	75	40	130	10

Mounting devices for ST5-2G L 125-320

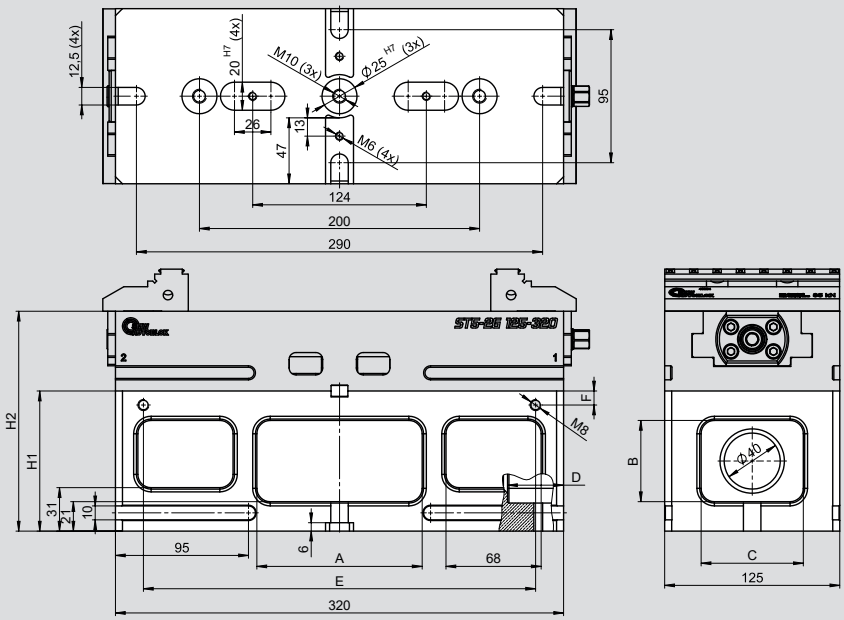

Subject to technical changes.

ST5-2G not included in scope of delivery.

Type	Id. No.	H1	H2	A	B	C	D	E	F
ST5-2G L 125-320	466324	60	117	120	25	75	40	280	10
ST5-2G L 125-320	466325	100	157	120	60	75	40	280	10
ST5-2G L 125-320	466326	120	177	120	80	75	40	280	10

Pyramid for ST5-2G 80 / ST5-2G 125

Applications / Customer Benefits

- Ideal for 5 axis machines
- Compact design
- Possibility to be mounted directly on machine tools with radial slots at 45 / 60 degrees
- Possibility to be mounted directly on single plate or DUO APS (pitch 200)

Technical features

- Material: ALU

467187

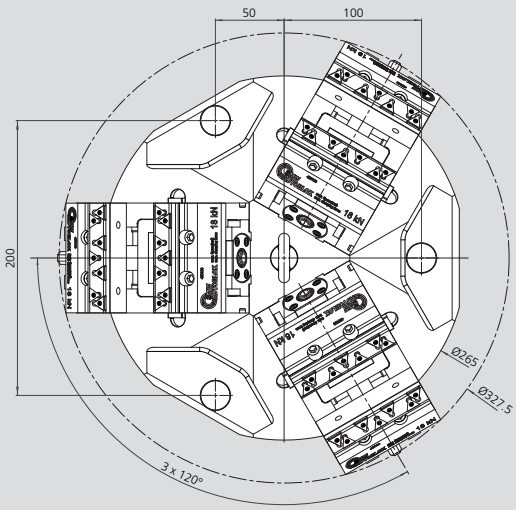

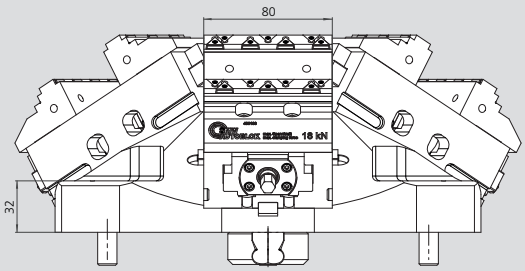

467188

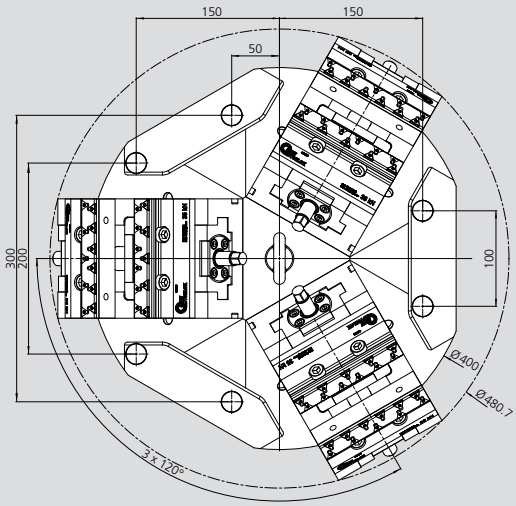

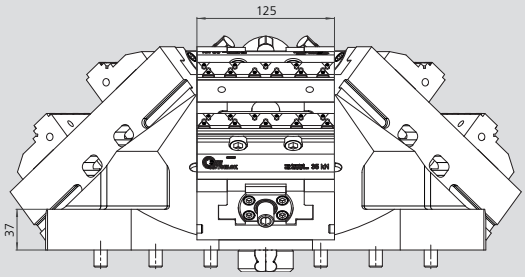

Type	Id. No.	Weight [kg]
IMG 080-220 ALU pyramid	467187	17.9
IMG 125-220 ALU pyramid	467188	58.3

ST5-2G 080 overview configurations

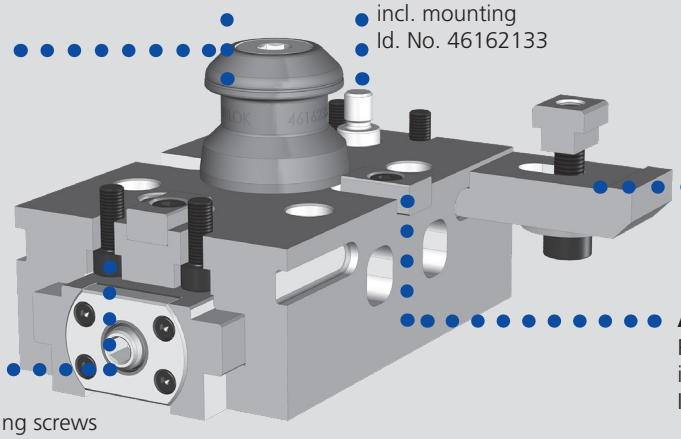

ST5-2G 125 overview configurations

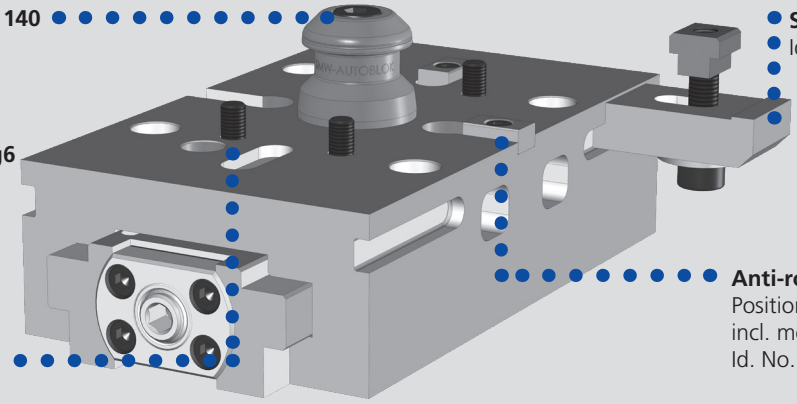

Set of clamps

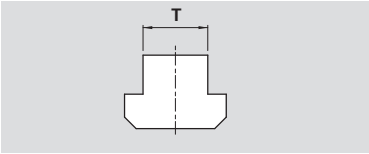

Consisting of:
1 clamp
with adjustable mounting
incl. T-nut and screw

Type	Id. No.						
T	10 mm	12 mm	14 mm	16 mm	18 mm	20 mm	22 mm
ST5-2G 080	466150	466151	466152	466153	466154	466155	-
ST5-2G 125	-	466142	466143	466144	466145	466146	466147

Pair of positioning keys (special dimensions)

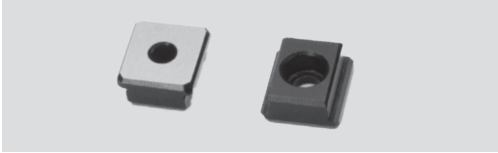

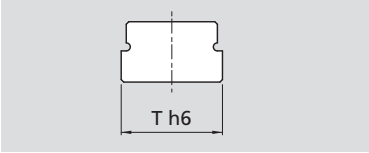

Type	Id. No.					
Th6	12 mm - h6	14 mm - h6	16 mm - h6	18 mm - h6	20 mm - h6	22 mm - h6
ST5-2G	466135	462058	462059	462060	462061	462062

ST5-HDS 125-320

5-axis vise – heavy duty version

- Extra rigid design with very high clamping forces
- Sealed – protected spindle
- Centrical clamping

Application/customer benefits

- Heavy duty high precise 5-axis centric clamping vise with highest repeatability
- Sealing for protection against contamination
- Compact design for best accessibility and with large chip ejection windows
- PREMIUM: Jaws with SinterGrip clamping inserts for lowest clamping depth of the workpiece without pre-marking
- Extra large clamping range
- Ideal for OP 10 and OP 20

SinterGrip Page 116

Technical features

- Centrical clamping
- Manual actuation on both sides (SW 17)
- Clamping range 0 until 246 mm
- Clamping force up to 60 kN (100 Nm)
- Jaw width 125 mm
- Interface for zero point clamping systems APS / WPS / ZeroAct and Lang 96 mm as a standard

Standard equipment

5-axis vise with wrench, BASIC: 1 pair top jaws Gripper
PREMIUM: SinterGrip top jaws with 14 pieces SinterGrip clamping inserts and 14 pieces protective cover and mounting bolts

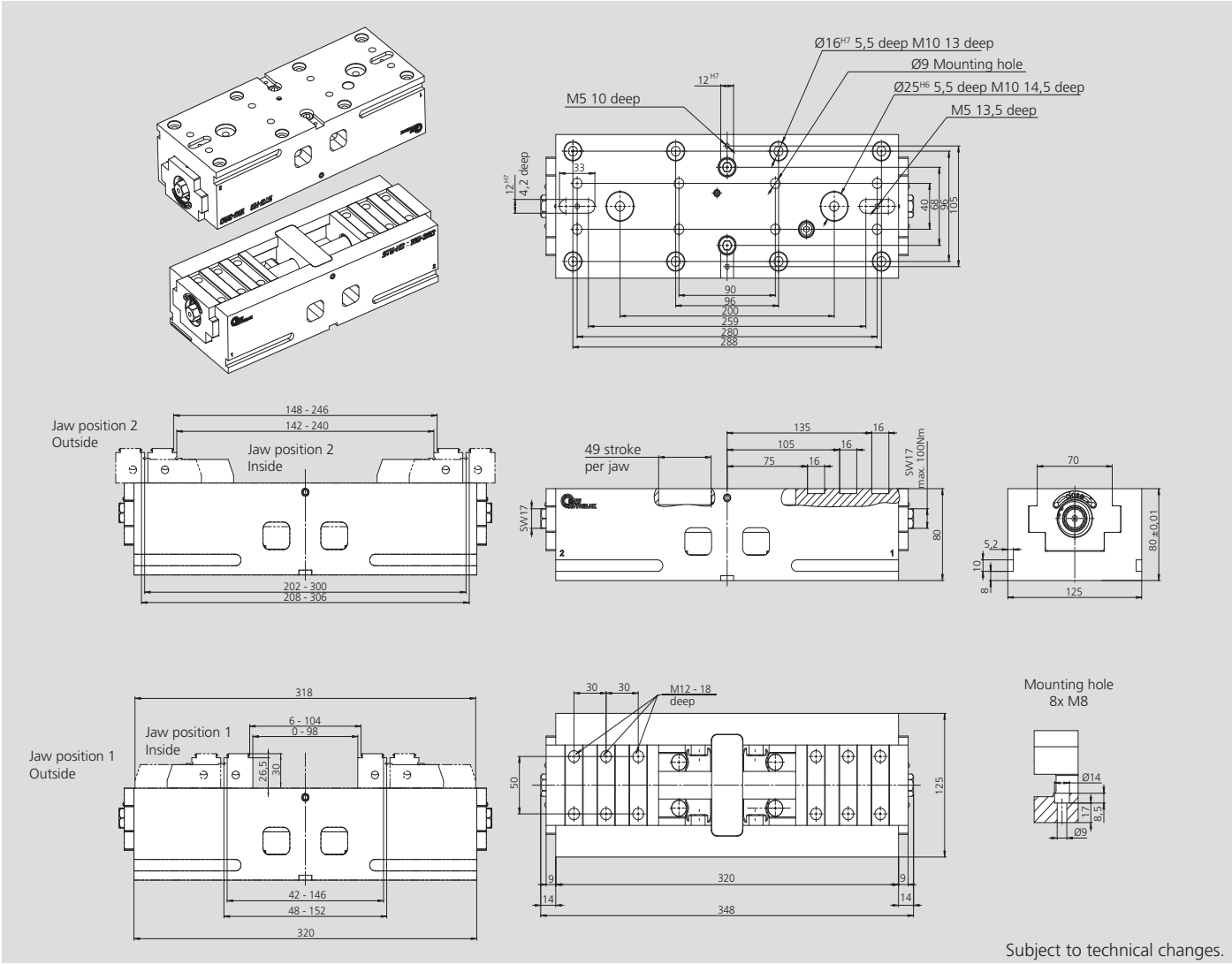

Subject to technical changes.

Order review

Type	Clamping range [mm]	Id. No.
ST5-HDS 125-320 BASIC with gripper jaws	0-246	466122
ST5-HDS 125-320 PREMIUM with SinterGrip jaws STD	0-246	466123
ST5-HDS 125-320 PREMIUM with SinterGrip jaws ALU	0-246	466123A
ST5-HDS 125-320 PREMIUM with SinterGrip jaws HRC	0-246	466123H
ST5-HDS 125-320 without top jaws	0-246	466230

ST5-HDS top jaws BASIC gripper (set with 2 jaws)

1 set = 2 pieces top jaws incl. 4 pcs. mounting screws

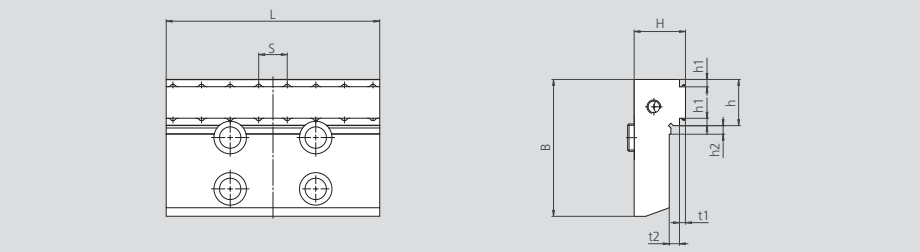

Type	Id. No.		L	B	H	S	h	h1	h2	t1	t2
ST5-HDS 125	466298	Top jaw	124.8	80	30	16.7 (7x)	27	3	5	3.5	5

ST5-HDS top jaws smooth (set with 2 jaws)

1 set = 2 pieces top jaws incl. 4 pcs. mounting screws

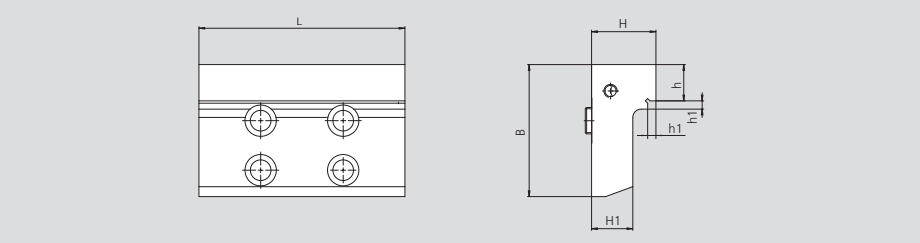

Type	Id. No.		L	B	H	H1	h1	h
ST5-HDS 125	466304	Top jaw	124.8	80	39	25	5	22

ST5-HDS top jaws PREMIUM (set with 2 jaws)

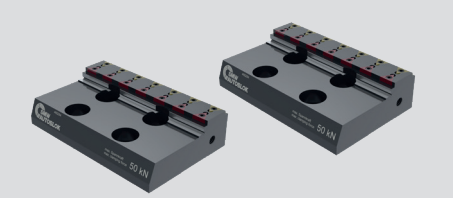

1 set = 2 pcs. top jaws; without SinterGrip clamping inserts, incl. 4 pcs. mounting screws

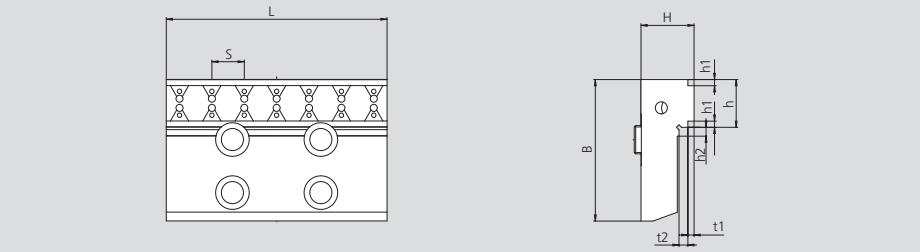

Type	Id. No.		L	B	H	S	h	h1	h2	t1	t2	SinterGrip per jaw
ST5-HDS 125	466300	Top jaw	124.8	80	30	18.3 (7x)	27	3	5	3.5	5	7+7

ST5-HDS top jaws PREMIUM higher version (set with 2 jaws)

1 set = 2 pcs. top jaws; without SinterGrip clamping inserts, incl. 4 pcs. mounting screws

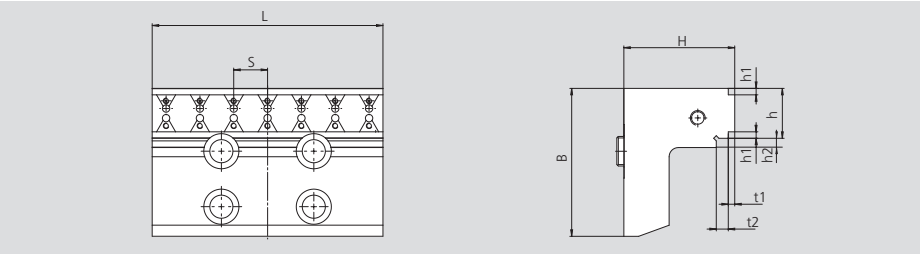

Type	Id. No.		L	B	H	S	h	h1	h2	t1	t2	SinterGrip per jaw
ST5-HDS 125	466302	Top jaw	124.8	80	60	18.3 (7x)	27	3	5	3.5	6.5	7+7

ST5-HDS soft top jaws, high design

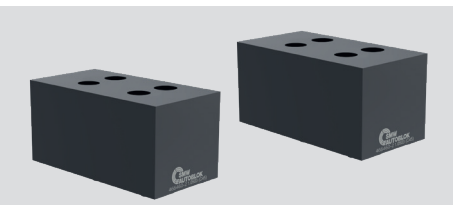

1 set = 2 pieces; incl. 8 pcs. mounting screws

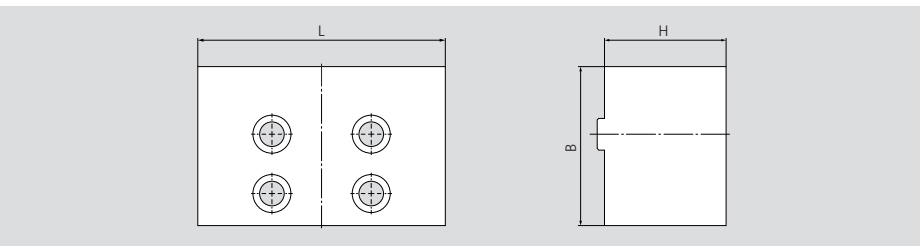

Type	Id. No.	L	B	H
ST5-HDS 125	466460-2	79.8	55	52.7

Adapter for ST5-2G top jaws for the use of ST5-2G top jaws on ST5-HD vises

Application example:

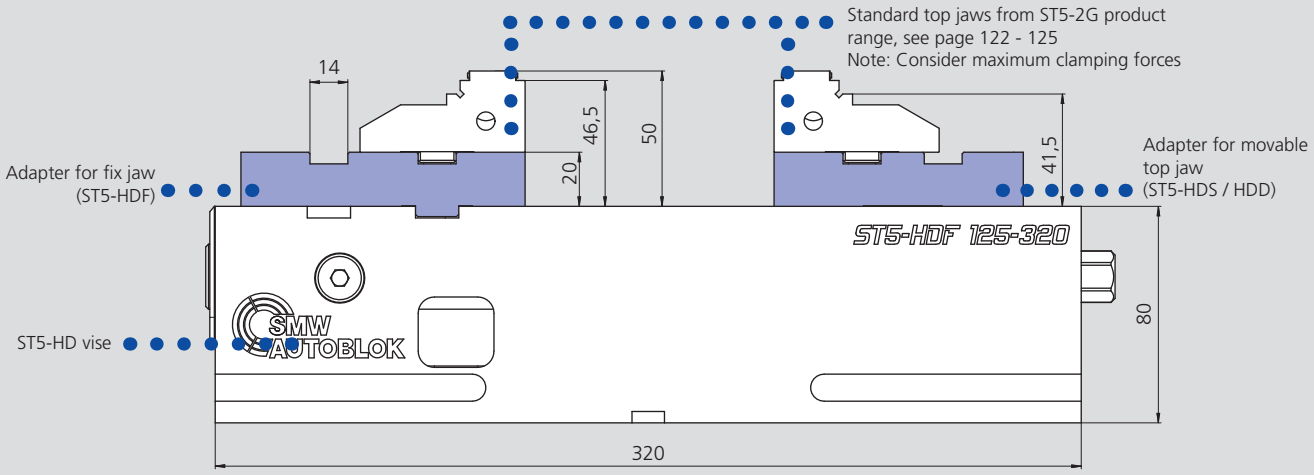

ST5-HD vise not included in scope of delivery.

Adapter for movable top jaw (ST5-HDS / HDD)

Subject to technical changes.

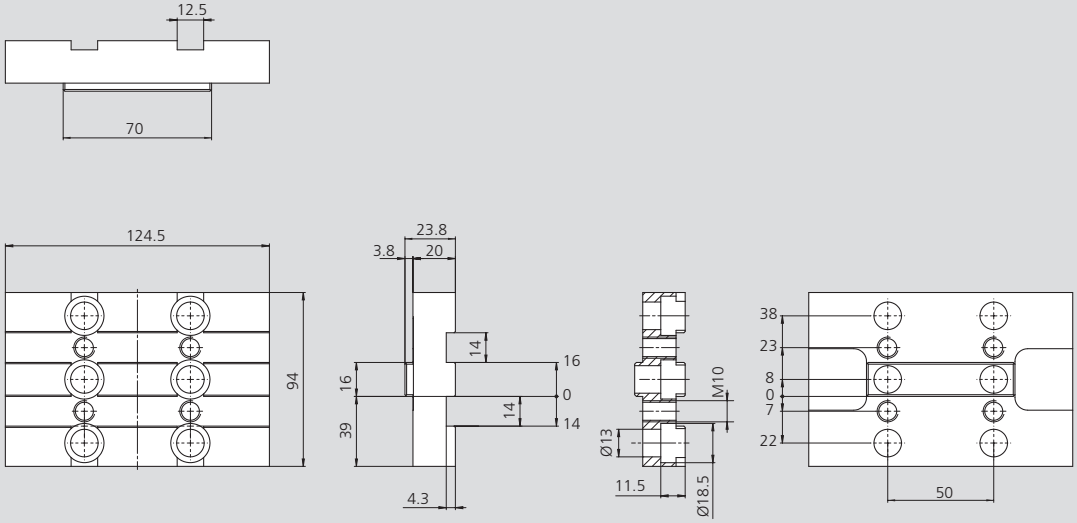

Adapter for fix jaw (ST5-HDF)

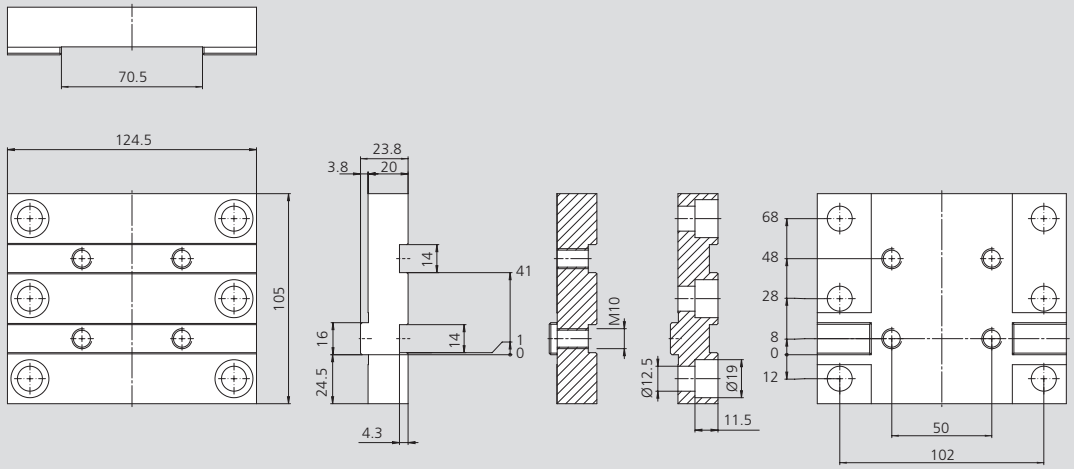

Type	Id. No.
1 Adapter for movable top jaw	466229
1 Adapter for fix jaw	466297

Grip insert smooth, height 11 mm

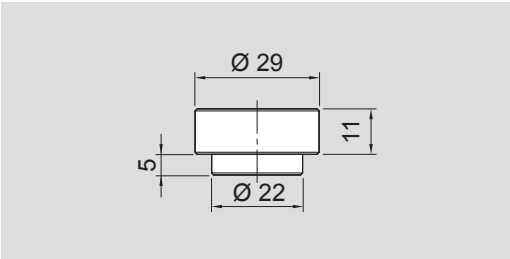

Smooth
Height 11 mm
Set consisting of 4 grippers and 4 fixing screws

Type	Id. No.
GT5 / ST5-2G	58906114

Grip insert serrated, height 11 mm

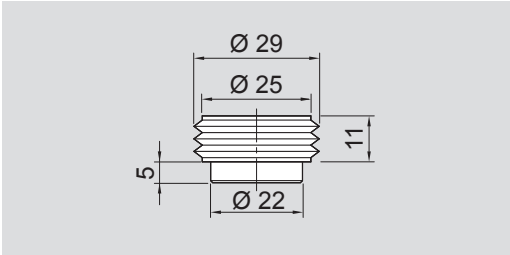

Serrated
Height 11 mm
Set consisting of 4 grippers and 4 fixing screws

Type	Id. No.
GT5 / ST5-2G	58906124

Grip insert smooth, height 19 mm

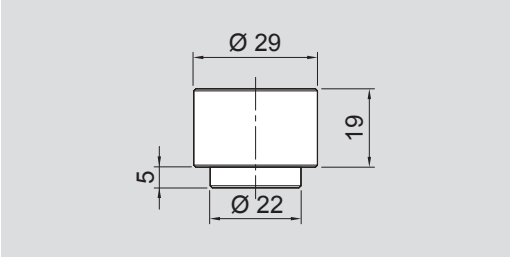

Smooth
Height 19 mm
Set consisting of 4 grippers and 4 fixing screws

Type	Id. No.
GT5 / ST5-2G	58906214

Stop pins ALB

SMW-AUTOBLOK Type	Id. No.	G	H	SW
ALB 605	**016513**	M6	5	10
ALB 610	**016511**	M6	10	10
ALB 615	**016512**	M6	15	10
ALB 620	**017602**	M6	20	10

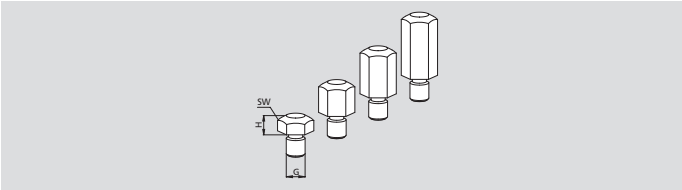

Grip insert serrated, height 19 mm

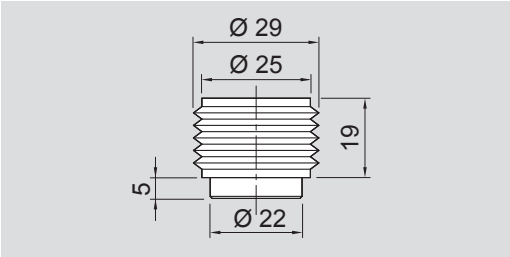

Serrated
Height 19 mm
Set consisting of 4 grippers and 4 fixing screws

Type	Id. No.
GT5 / ST5-2G	58906224

Grip insert smooth, height 24 mm

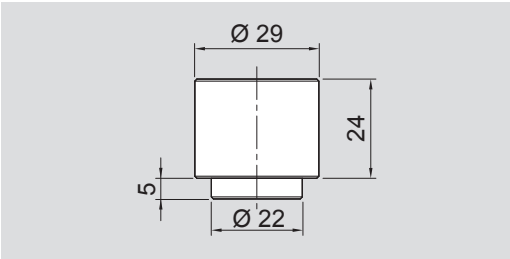

Smooth
Height 24 mm
Set consisting of 4 grippers and 4 fixing screws

Type	Id. No.
GT5 / ST5-2G	58906314

Grip insert serrated, height 24 mm

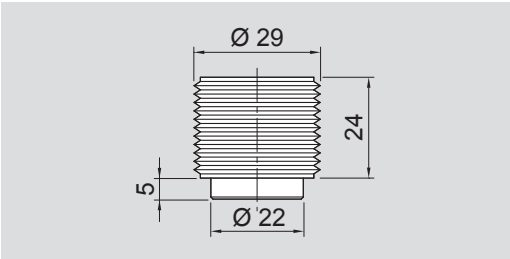

Serrated
Height 24 mm
Set consisting of 4 grippers and 4 fixing screws

Type	Id. No.
GT5 / ST5-2G	58906324

Grip insert Multigrip 12.5 mm

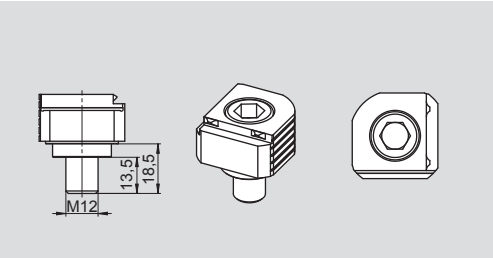

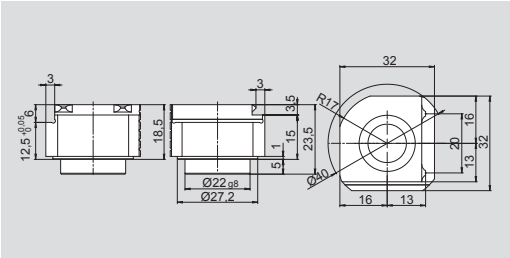

Multigrip
Height 12.5 mm
Set consisting of 1 gripper and 1 fixing screw

Type	Id. No.
GT5 / ST5-2G	466228

Notes

IMG
Self-centering vise

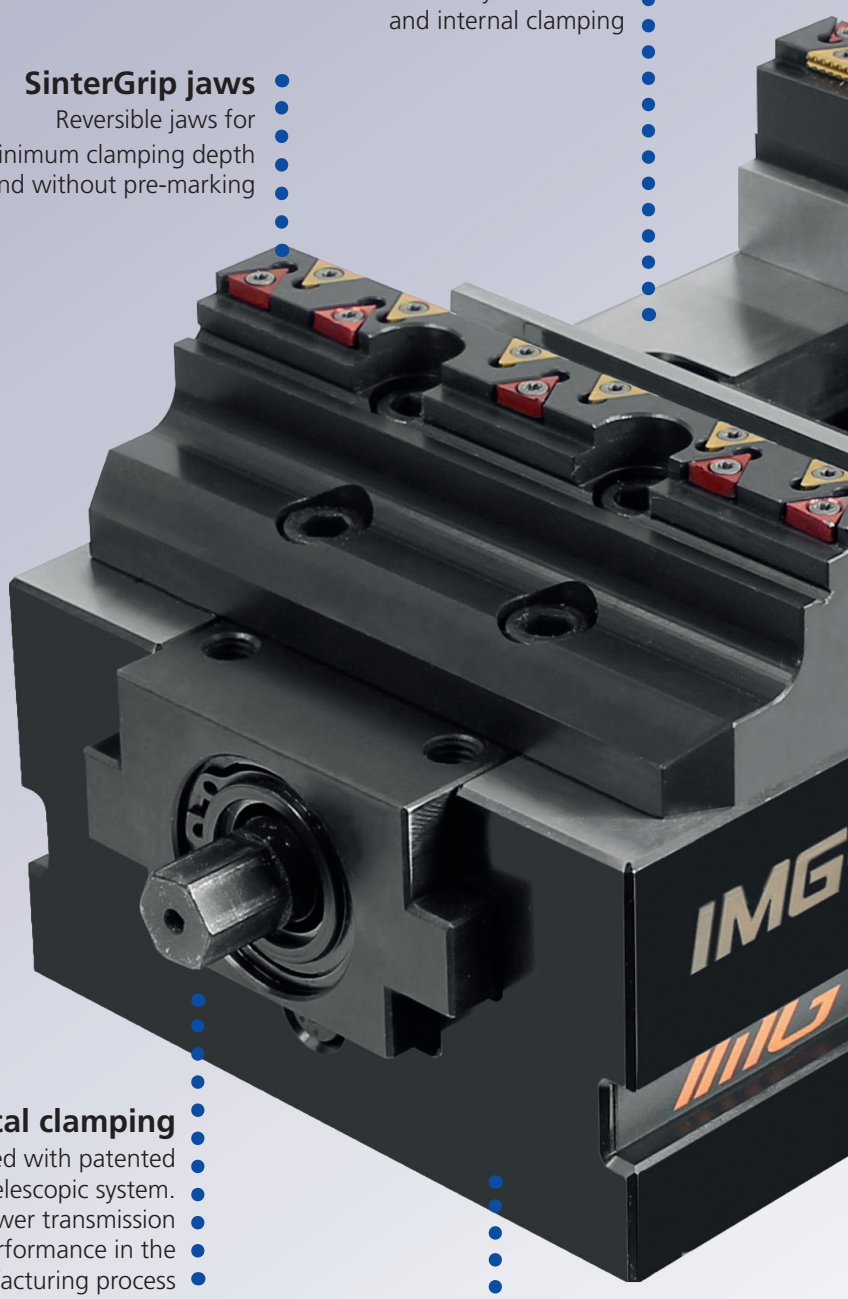

Wide clamping range
Maximum flexibility for external and internal clamping

SinterGrip jaws
Reversible jaws for minimum clamping depth and without pre-marking

Mechanical clamping
Fully protected with patented telescopic system.
The large power transmission allows high performance in the manufacturing process

Interface
for Zero Point clamping systems and mounting holes as standard

Find out more

▶ from SMW-AUTOBLOK

Fully protected
with patented telescopic system

Nitreg® treatment

Through-holes
for frontal clamping

Ideal
for automation and palletizing systems

Flexible mounting
on machine tool pallet using clamps (optional)

Double clamping jaw (for double clamping)

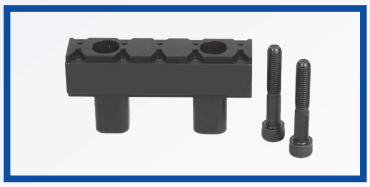

Retainer plate (for fixed clamping)

Very large drainage slots
for coolant and chips

Treated and precision ground guides
for maximum accuracy and repeatability

Parallels
with quick change CLAK System

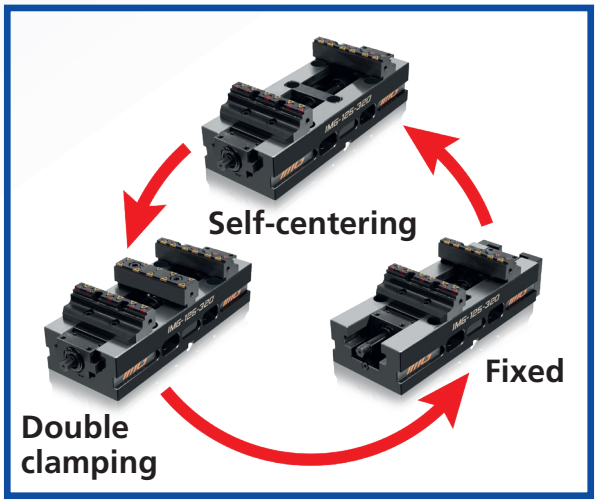

IMG

Self-centering vise

- Sealed – Protected spindle
- Double clamping

Modular system

The IMG self-centering vises can be easily transformed into fixed vises or double clamping vises.

Self-centering:

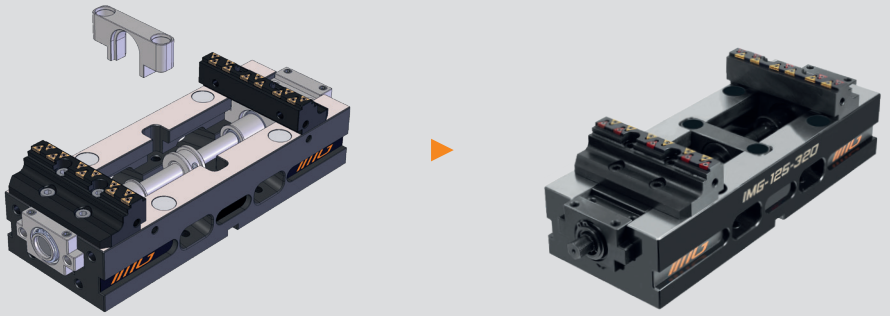

Double clamping:

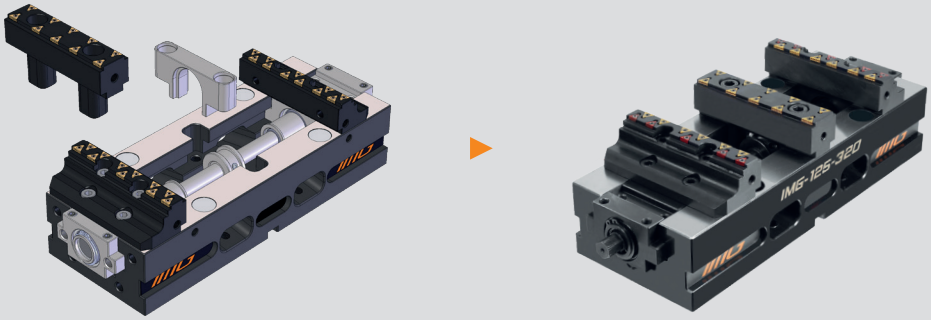

Fixed:

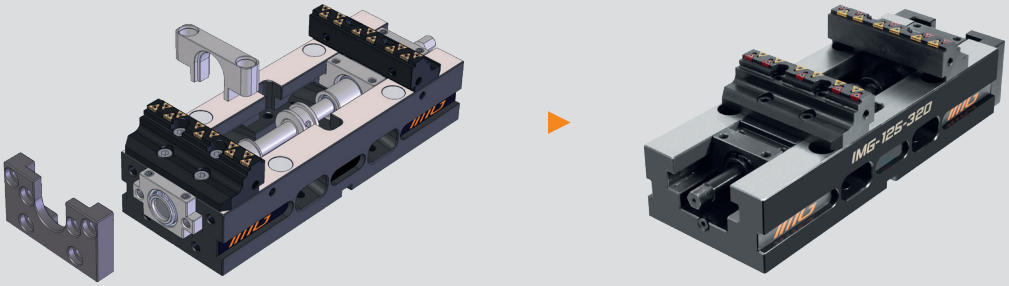

The double clamping vises have a completely compensating mechanism (until zero), therefore it is possible to clamp 2 pieces of different sizes.

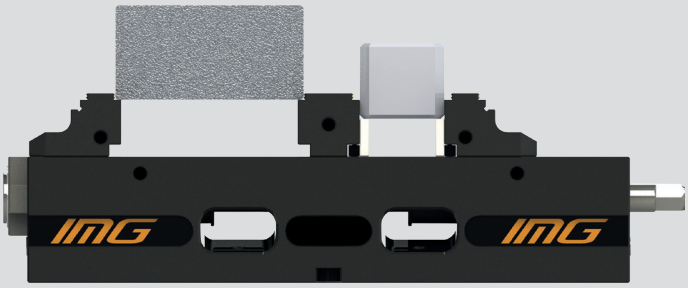

- Sealed – Protected spindle
- Double clamping

High clamping performance

IMG vises clamp up to 50 kN. The clamping force combined with the patented SinterGrip system guarantees high performance.

OP 10

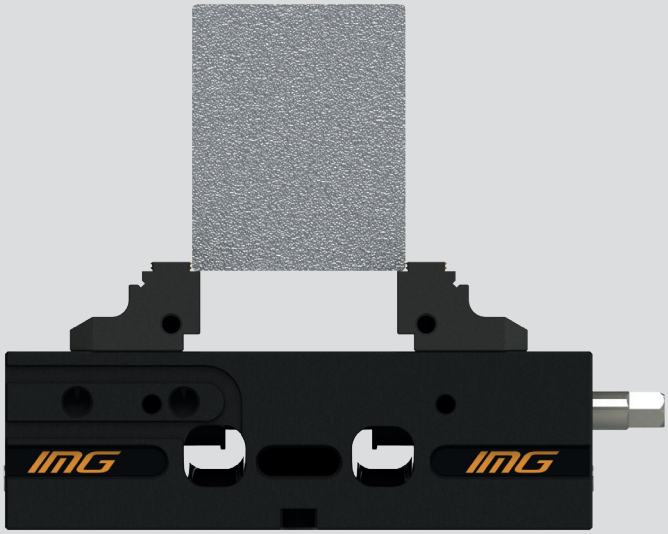

SinterGrip
Page 116

SinterGrip method

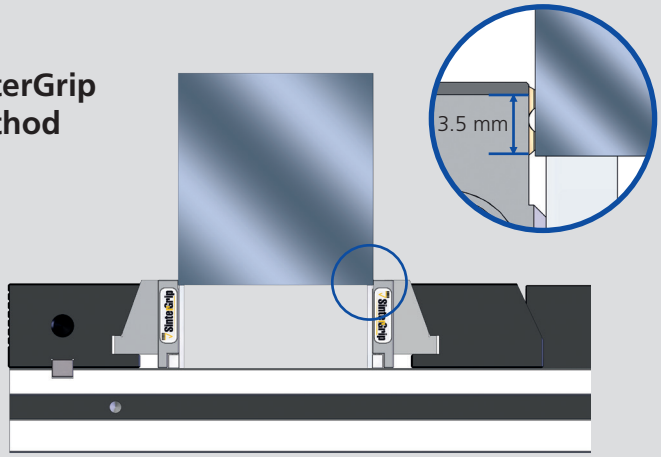

Conventional method

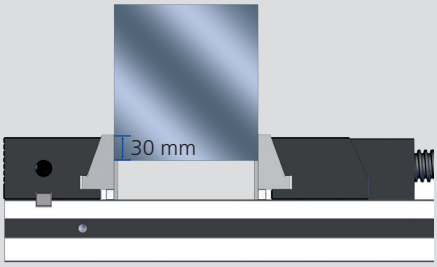

OP 20

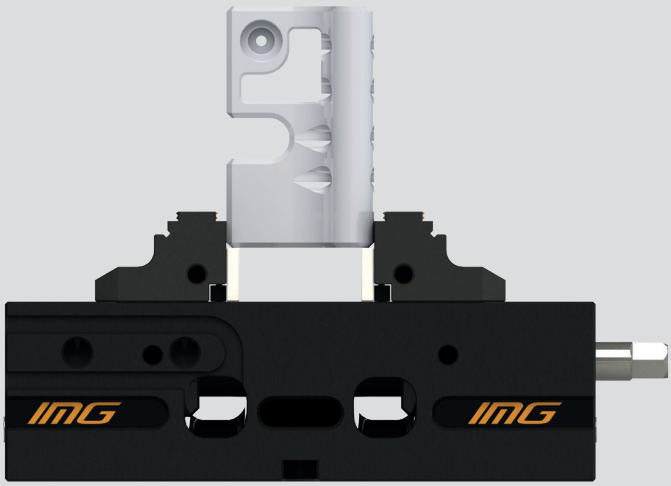

IMG 125 - 220

Self-centering vise

- Double clamping / Fixed
- Patented protected screw

Applications / Customer Benefits

- High precise self-centering clamping with high repeatability
- Fully protected
- Compact design for better accessibility
- Very large drainage slots
- Jaws with SinterGrip clamping inserts for minimum workpiece clamping depth without pre-marking
- Large clamping range
- Ideal for OP 10 and OP 20

SinterGrip
Page 116

Technical features

- Self-centering clamping
- Clamping force up to 40 kN (80 Nm)
- Jaw width 125 mm
- Interface for zero point systems APS / WPS and Lang 52 / 96 mm as standard

Standard equipment

Wrench, jaws, SinterGrip inserts

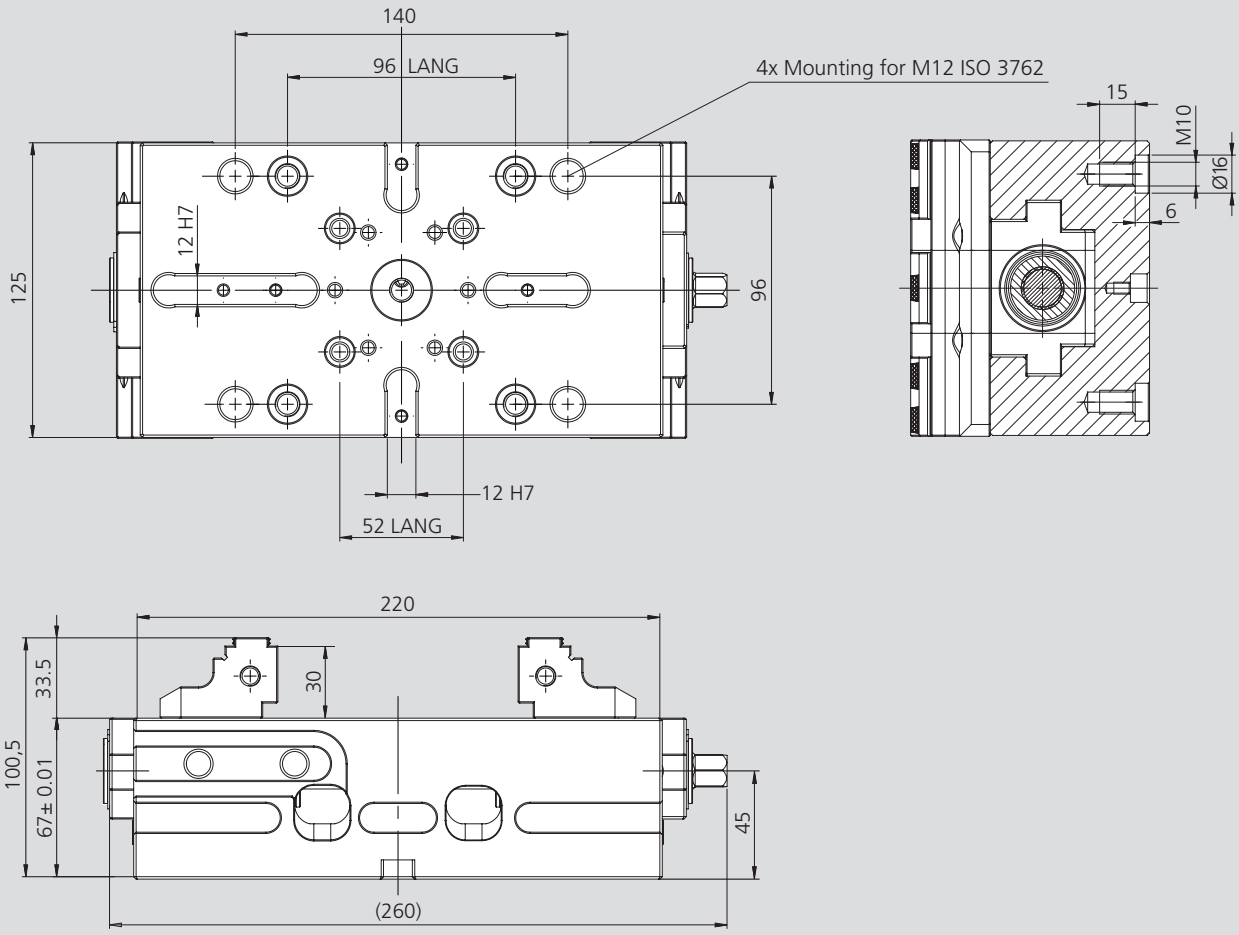

Subject to technical changes.

Type	Id. No.	Weight [kg]
IMG 125-220 with SinterGrip jaws **STD**	77583511	15
IMG 125-220 with SinterGrip jaws **ALU**	77583512	15
IMG 125-220 with SinterGrip jaws **HRC**	77583513	15
Clamping pins M12 APS 140 (Type A / B)	46162355 / 46162356	0.3
Clamping pins M12 APS 190 (Type A)	46162635	0.85

Self-centering clamping

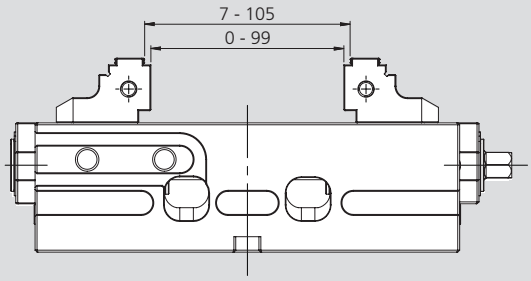

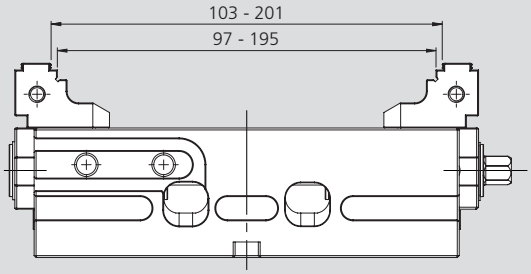

Double clamping

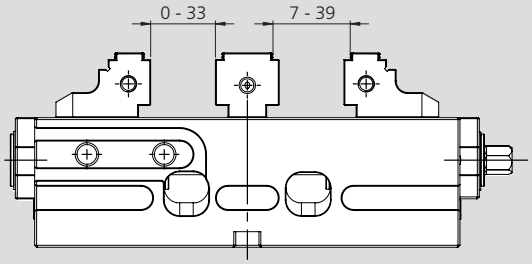

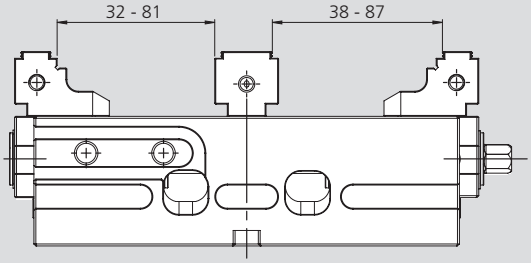

Fixed clamping

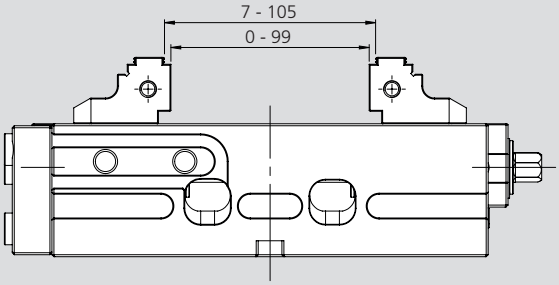

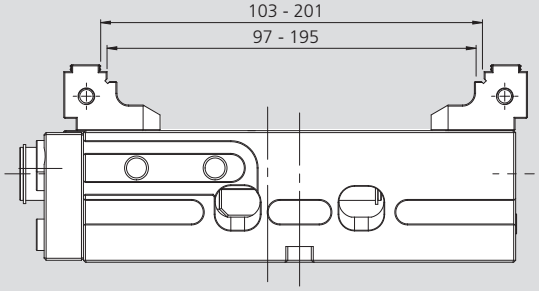

IMG 125 - 320

Self-centering vise

- Double clamping / Fixed
- Patented protected screw

Applications / Customer Benefits

- High precise self-centering clamping with high repeatability
- Fully protected
- Compact design for better accessibility
- Very large drainage slots
- Jaws with SinterGrip clamping inserts for minimum workpiece clamping depth without pre-marking
- Large clamping range
- Ideal for OP 10 and OP 20

SinterGrip
Page 116

Technical features

- Self-centering clamping
- Clamping force up to 40 kN (80 Nm)
- Jaw width 125 mm
- Interface for zero point systems APS / WPS and Lang 96 mm as standard

Standard equipment

Wrench, jaws, SinterGrip inserts

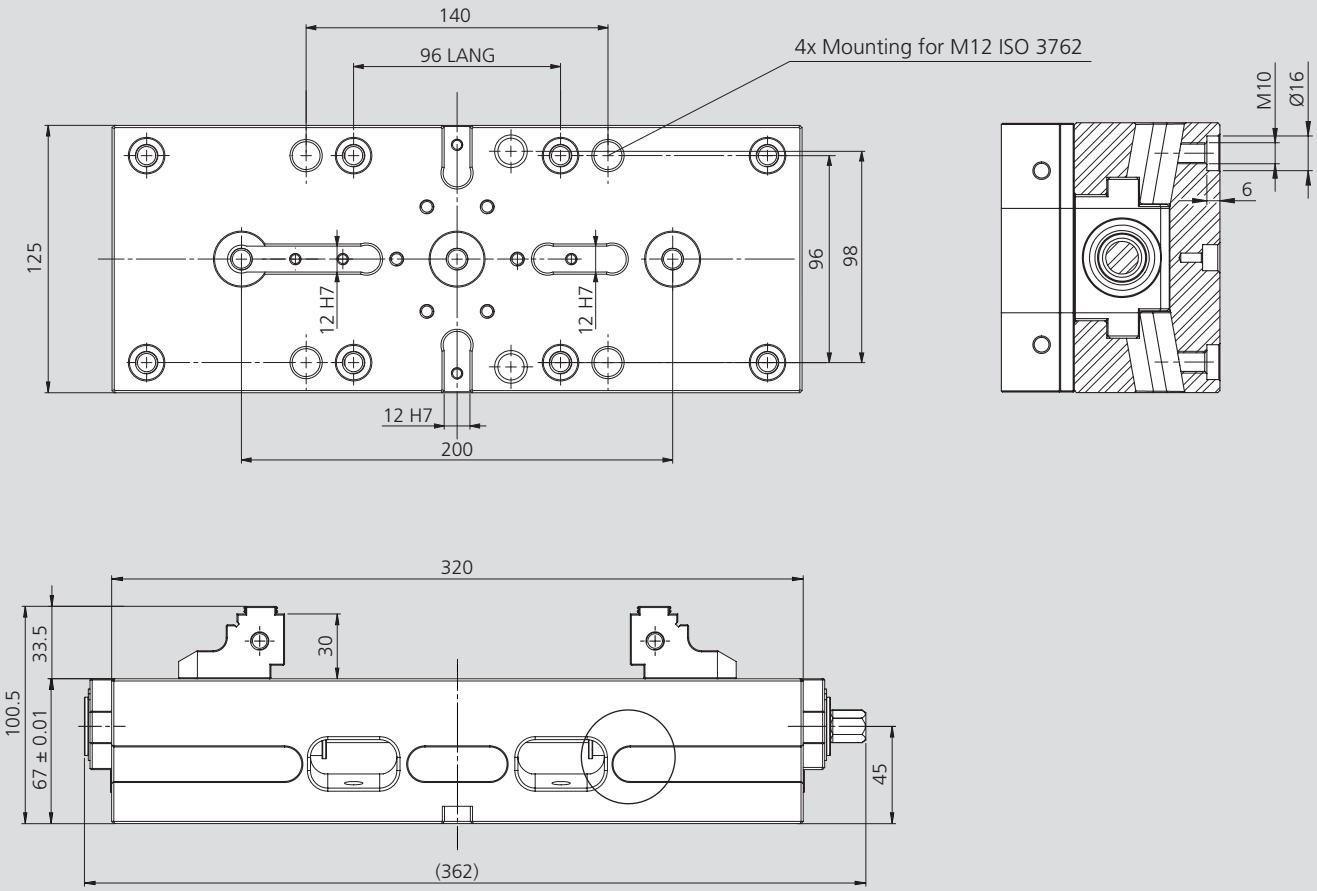

Subject to technical changes.

Type	Id. No.	Weight [kg]
IMG 125-320 with SinterGrip jaws **STD**	77583521	20
IMG 125-320 with SinterGrip jaws **ALU**	77583522	20
IMG 125-320 with SinterGrip jaws **HRC**	77583523	20
Clamping pins M12 APS 140 (Type A / B)	46162355 / 46162356	0.3
Clamping pins M12 APS 190 (Type A)	46162635	0.85

IMG 125 - 320

Self-centering clamping

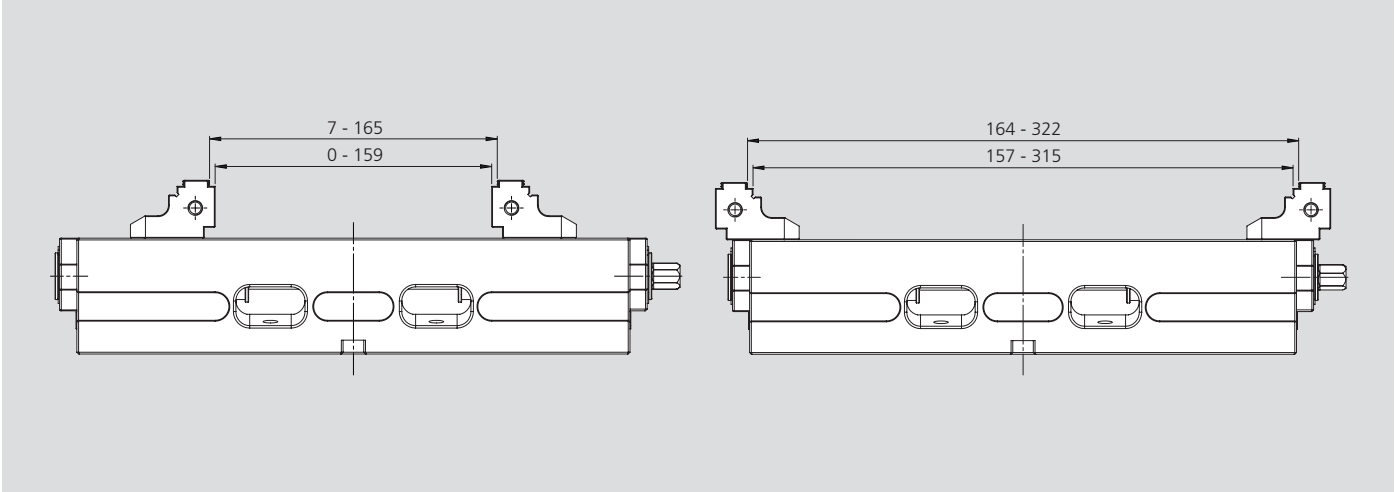

Double clamping

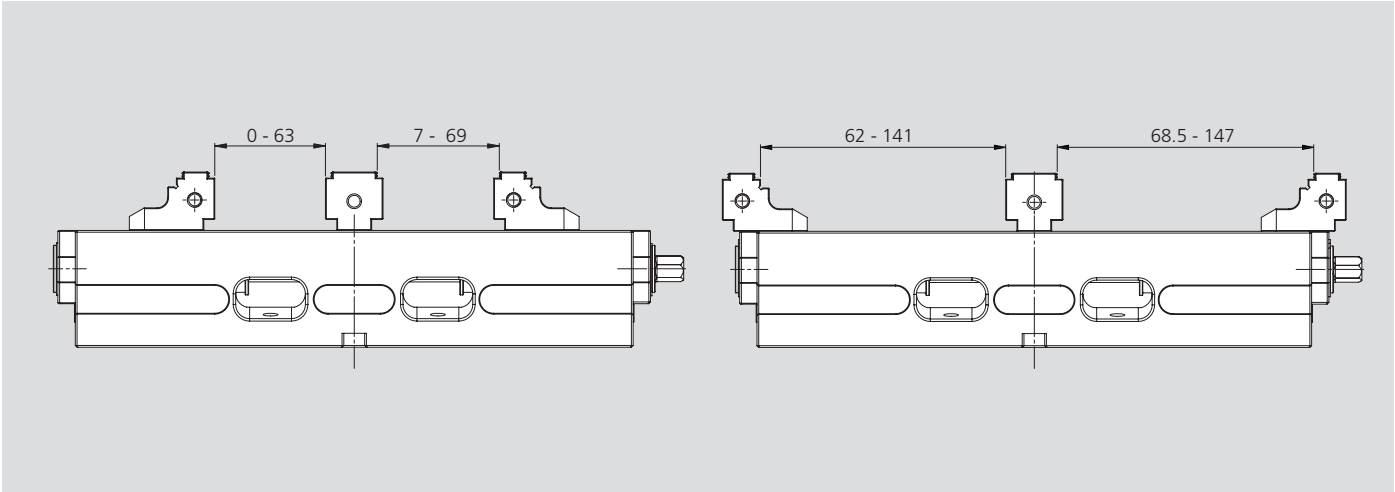

Fixed clamping

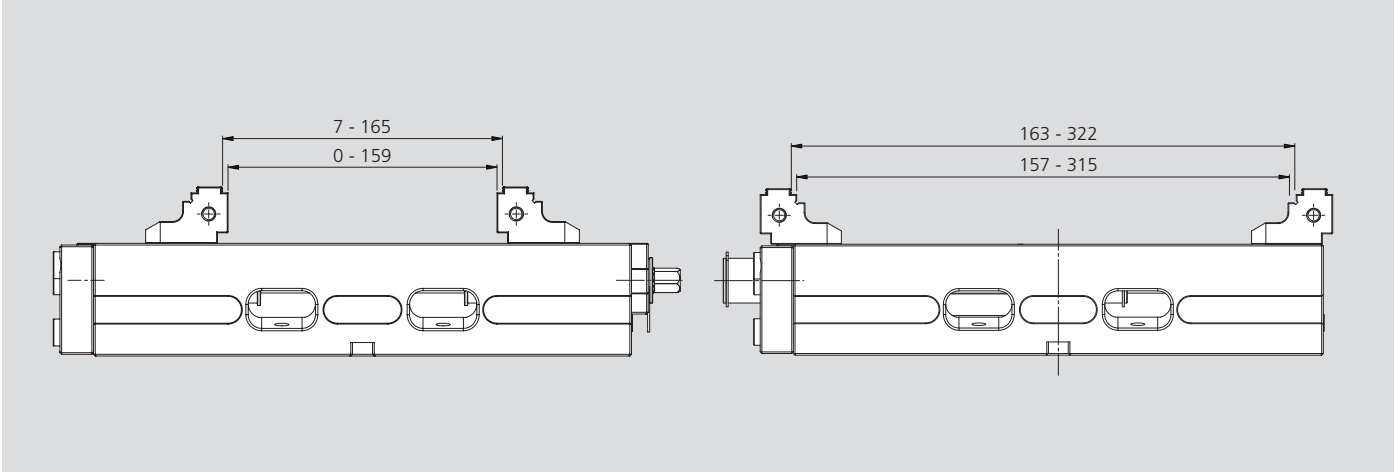

IMG 160 - 270

Self-centering vise

- Double clamping / Fixed
- Patented protected screw

Applications / Customer Benefits

- High precise self-centering clamping with high repeatability
- Fully protected
- Compact design for better accessibility
- Very large drainage slots
- Jaws with SinterGrip clamping inserts for minimum workpiece clamping depth without pre-marking
- Large clamping range
- Ideal for OP 10 and OP 20

SinterGrip
Page 116

Technical features

- Self-centering clamping
- Clamping force up to 55 kN (120 Nm)
- Jaw width 160 mm
- Interface for zero point systems APS / WPS and Lang 96 mm as standard

Standard equipment

Wrench, jaws, SinterGrip inserts

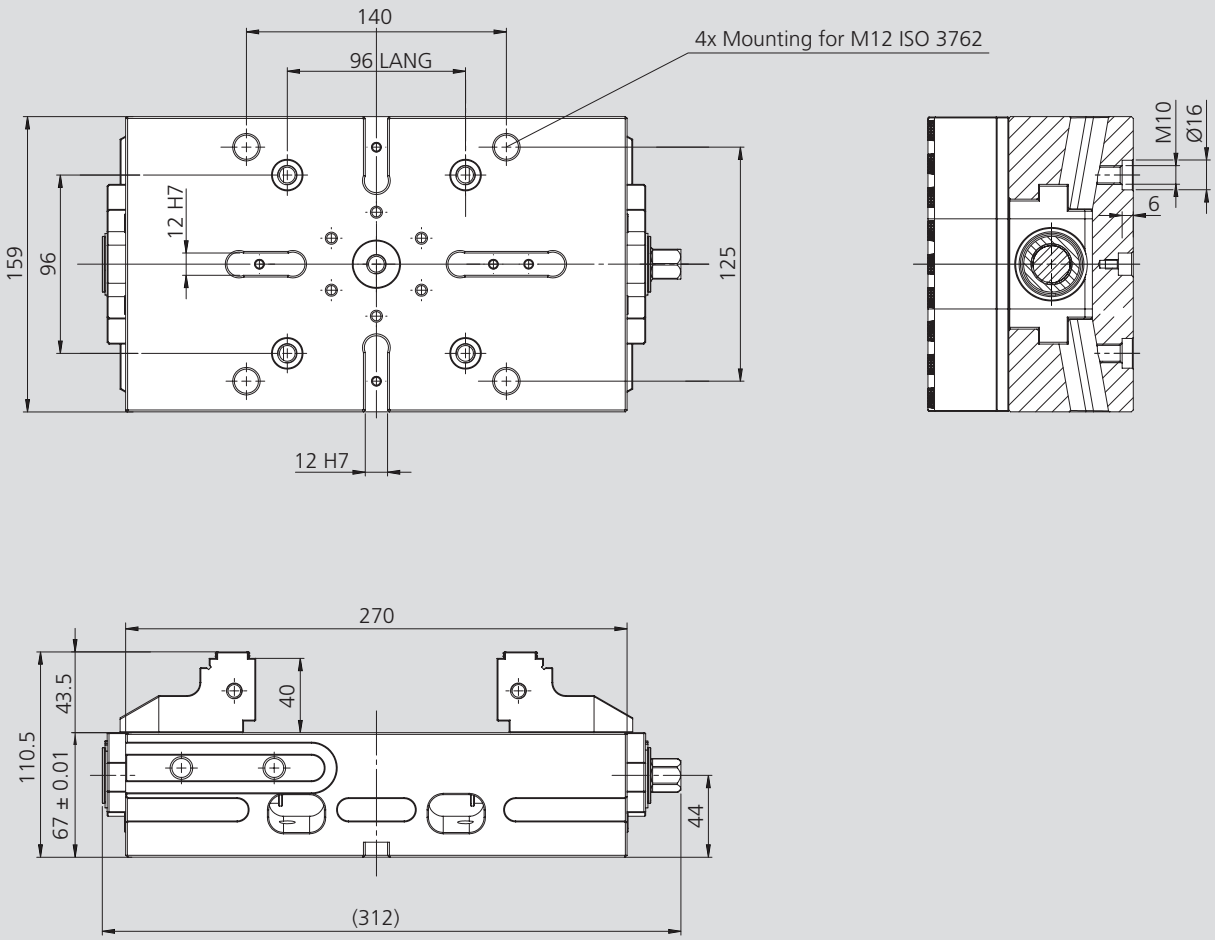

Subject to technical changes.

Type	Id. No.	Weight [kg]
IMG 160-270 with SinterGrip jaws **STD**	77583611	22
IMG 160-270 with SinterGrip jaws **ALU**	77583612	22
IMG 160-270 with SinterGrip jaws **HRC**	77583613	22
Clamping pins M12 APS 140 (Type A / B)	46162355 / 46162356	0.3
Clamping pins M12 APS 190 (Type A)	46162635	0.85

Self-centering clamping

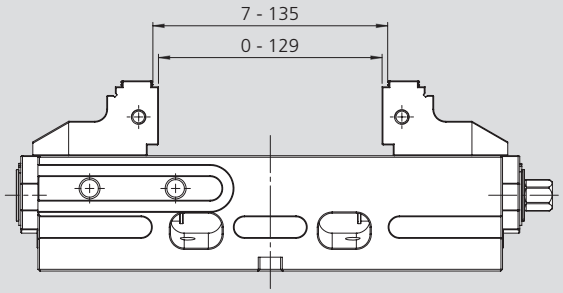

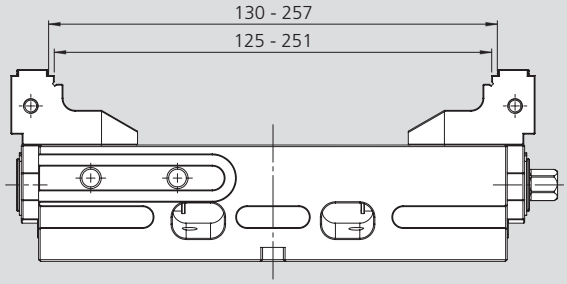

Double clamping

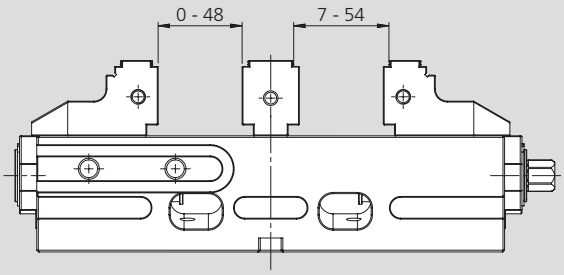

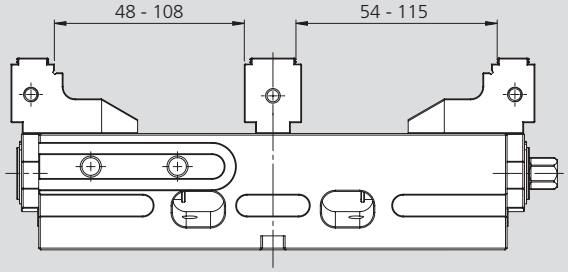

Fixed clamping

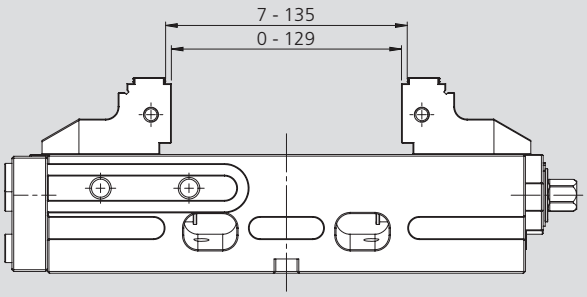

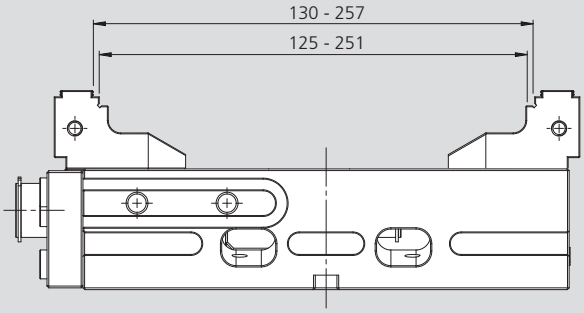

IMG 160 - 420

Self-centering vise

- Double clamping / Fixed
- Patented protected screw

Applications / Customer Benefits

- High precise self-centering clamping with high repeatability
- Fully protected
- Compact design for better accessibility
- Very large drainage slots
- Jaws with SinterGrip clamping inserts for minimum workpiece clamping depth without pre-marking
- Large clamping range
- Ideal for OP 10 and OP 20

SinterGrip
Page 116

Technical features

- Self-centering clamping
- Clamping force up to 55 kN (120 Nm)
- Jaw width 160 mm
- Interface for zero point systems APS / WPS and Lang 96 mm as standard

Standard equipment

Wrench, jaws, SinterGrip inserts

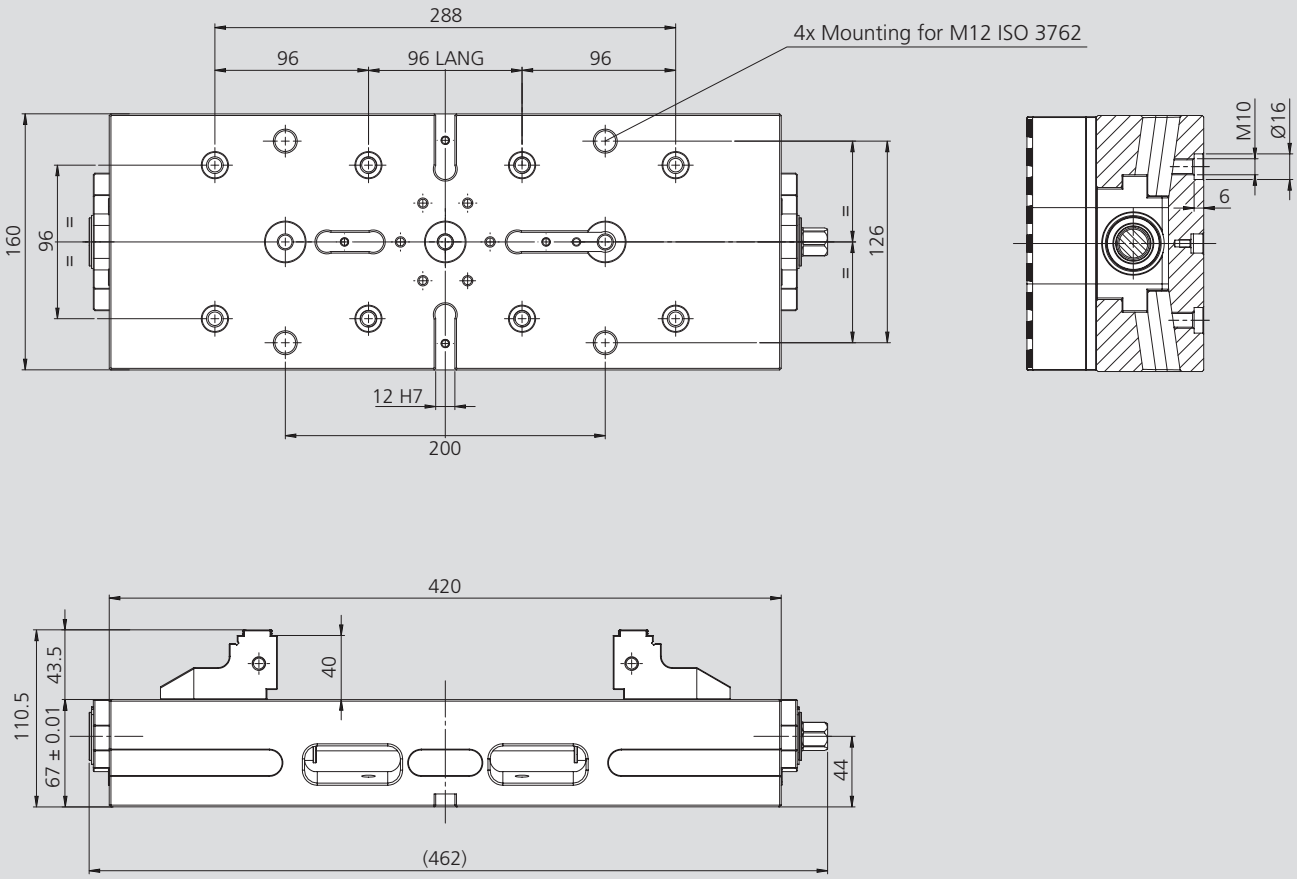

Subject to technical changes.

Type	Id. No.	Weight [kg]
IMG 160-420 with SinterGrip jaws **STD**	77583621	32
IMG 160-420 with SinterGrip jaws **ALU**	77583622	32
IMG 160-420 with SinterGrip jaws **HRC**	77583623	32
Clamping pins M12 APS 140 (Type A / B)	46162355 / 46162356	0.3
Clamping pins M12 APS 190 (Type A)	46162635	0.85

IMG 160 - 420

Self-centering clamping

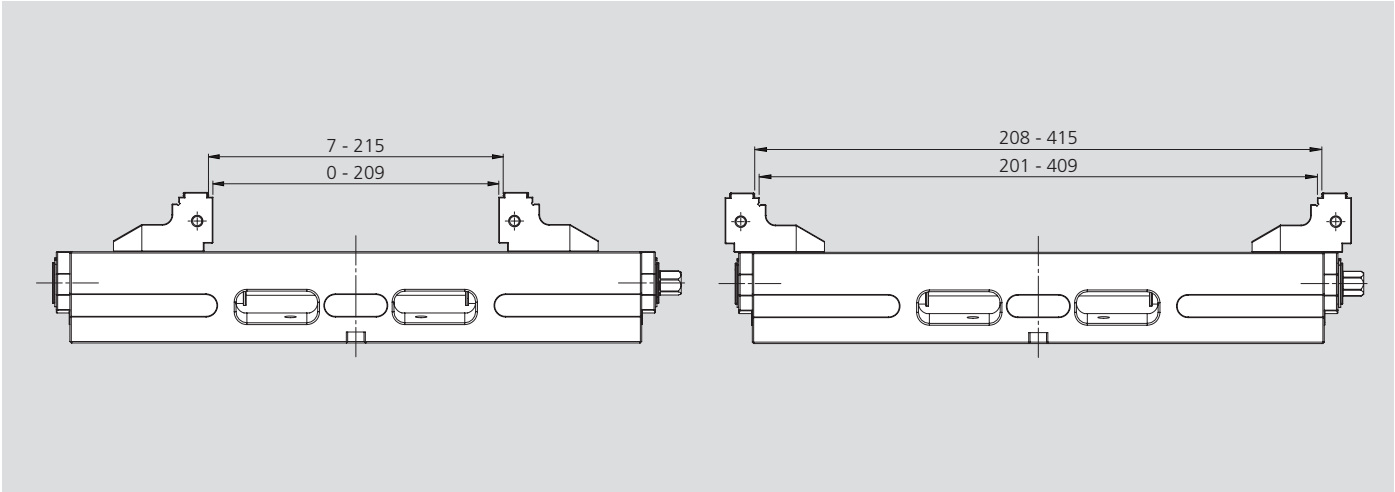

Double clamping

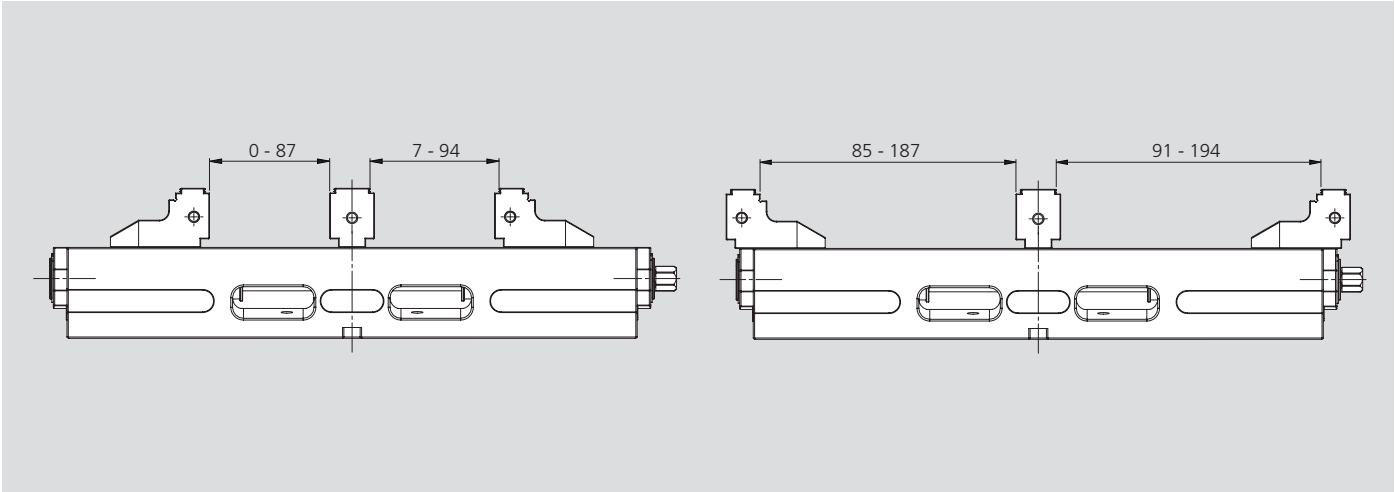

Fixed clamping

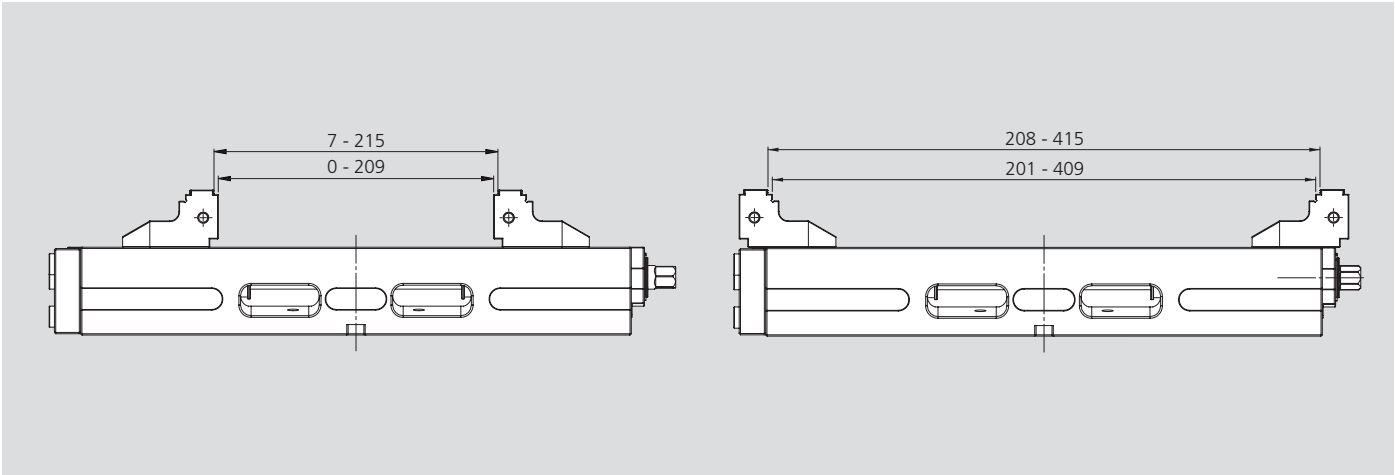

ALU pyramid for IMG 125-220

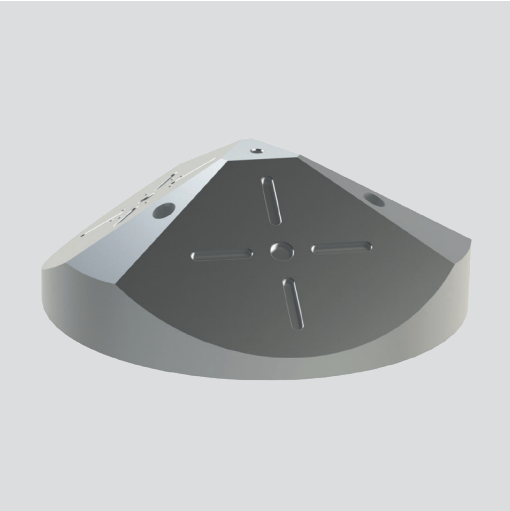

Applications / Customer Benefits

- Ideal for 5 axis machines
- Compact design
- Possibility to be mounted directly on machine tools with radial slots at 45 / 60 degrees
- Possibility to be mounted directly on single plate or DUO APS (pitch 200)

Technical features

- Material: ALU

On request:
Positioning keys for IMG,
APS pins,
positioning keys for machine tool

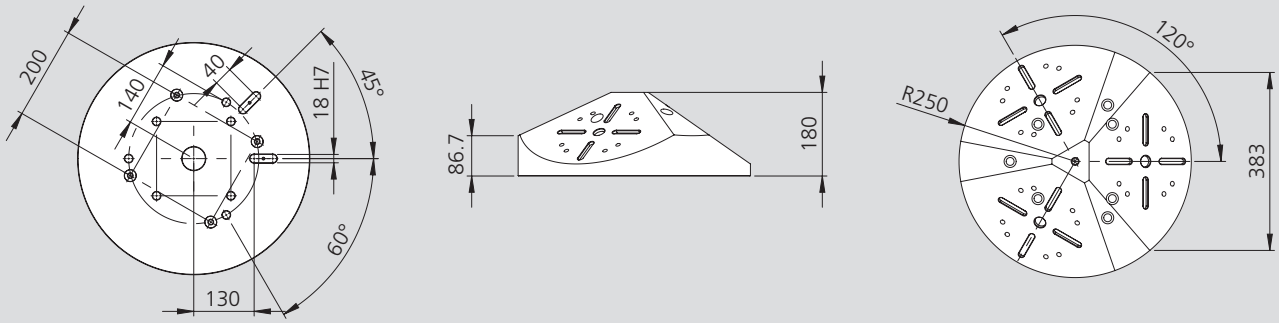

Subject to technical changes.

Type	Id. No.	Weight [kg]
IMG 125-220 ALU pyramid	58353210	55

Application example

Applications / Customer Benefits

- Ideal for 5 axis machines
- Compact design
- Possibility to be mounted directly on machine tools with T slots
- Possibility to be mounted directly on single plate or DUO APS (pitch 200)

Technical features

- Material: Steel

On request:
Positioning keys for IMG,
APS pins,
positioning keys for machine tool

IMG not included in scope of delivery.

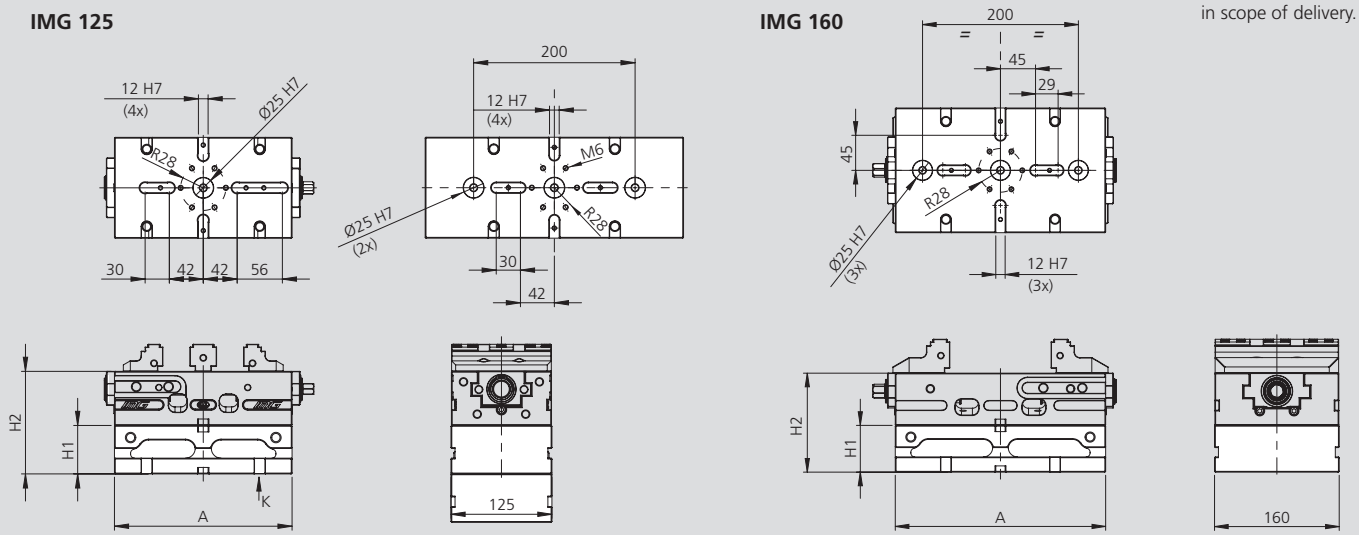

Type	Id. No.	H1 [mm]	H2 [mm]	A [mm]	Weight [kg]
IMG 125 Riser	58352018	60	127	220	10
IMG 125 Riser	58352028	100	147	220	15
IMG 125 Riser	58352019	60	127	320	15
IMG 125 Riser	58352029	100	147	320	21
IMG 160 Riser	58362018	60	127	270	17
IMG 160 Riser	58362028	100	167	270	25
IMG 160 Riser	58362019	60	127	420	26
IMG 160 Riser	58362029	100	167	420	38

Application examples

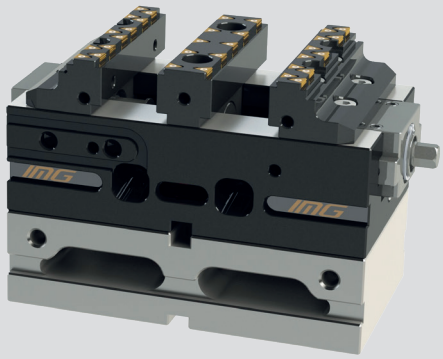

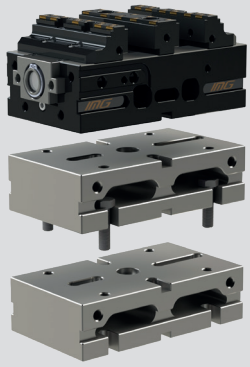

Double clamping jaw

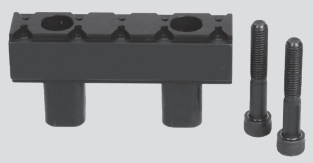

Without SinterGrip clamping inserts
incl. 2 pcs. mounting screws

Type	Id. No.
IMG-DCJ-125	58351719
IMG-DCJ-160	58361719

Retainer plate for fixed clamping

Incl. 6 pcs. mounting screws

Type	Id. No.
IMG-RP-125	58351019
IMG-RP-160	58361019

Reduced jaws

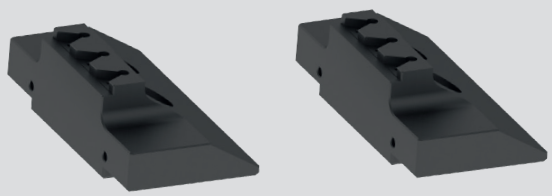

1 set = 2 pieces, without SinterGrip clamping inserts
incl. 4 pcs. mounting screws

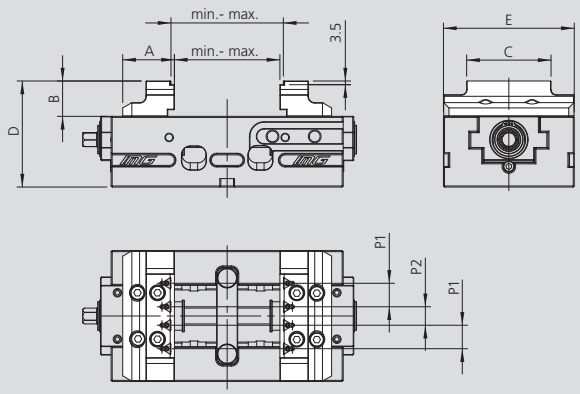

Type	Id. No.	A	B	C	D	E	p1	p2	min.	max.
IMG-RJ-125-220	58351519	49	33.5	80	100.5	123.5	22.25	17.5	0-7	99-105
IMG-RJ-125-320		49	33.5	80	100.5	123.5	22.25	17.5	0-7	159-165
IMG-RJ-160-270	58361519	73	43.5	90	110.5	158.5	18	18	0-7	129-135
IMG-RJ-160-420		73	43.5	90	110.5	158.5	18	18	0-7	209-215

Soft jaws (soft steel – aluminium)

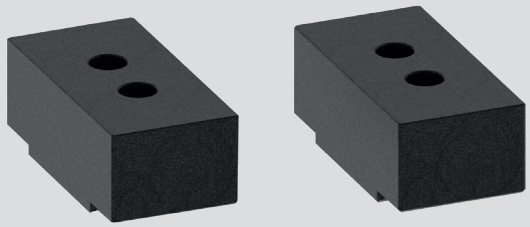

1 set = 2 pieces; incl. 4 pcs. mounting screws

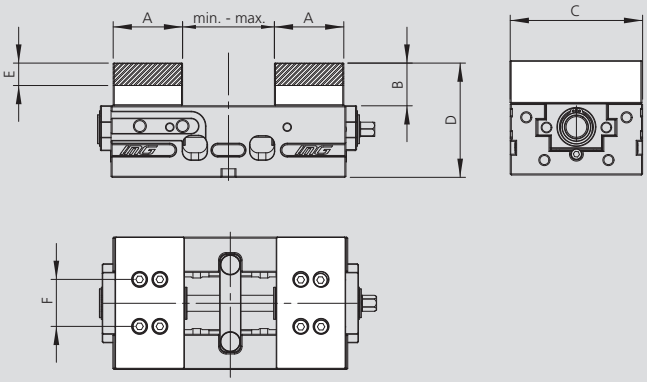

Type	Id. No.	A	B	C	D	E	F	min.	max.
IMG-SJA-125 (ALU)	58351619	65	40	123,5	107	20	44	0	86 (125x220) / 186 (125x320)
IMG-SJS-125 (Fe)	58351629	65	40	123,5	107	20	44	0	86 (125x220) / 186 (125x320)
IMG-SJA-160 (ALU)	58361619	85	50	158.5	117	25	52	0	141-147 (160x270) / 221-227 (160x420)
IMG-SJS-160 (Fe)	58361629	85	50	158.5	117	25	52	0	141-147 (160x270) / 221-227 (160x420)

Soft jaws for double clamping

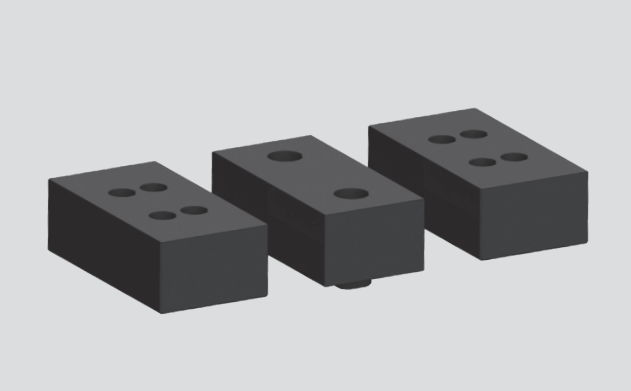

1 set = 3 pcs.

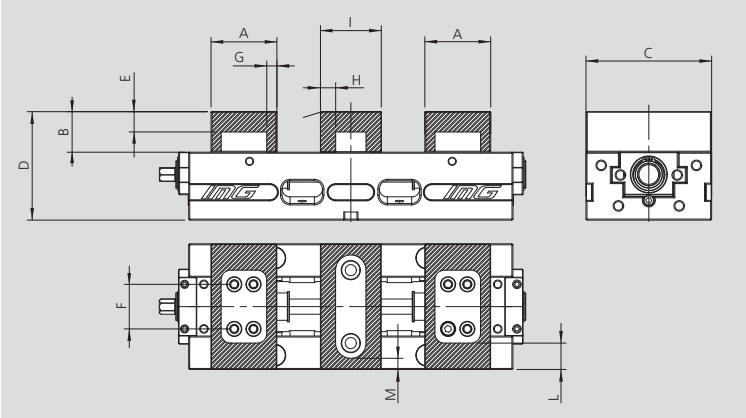

Type	Id. No.	A	B	C	D	E	F	G	H	I	L	M
IMG-SJDC-125 (ALU)	58359519	65	40	123.5	107	20	44	10	15	60	25	11
IMG-SJDC-125 (Fe)	58359619	65	40	123.5	107	20	44	10	15	60	25	11
IMG-SJDC-160 (ALU)	58369519	85	50	158.5	117	25	52	16.5	15	60	35	28
IMG-SJDC-160 (Fe)	58369619	85	50	158.5	117	25	52	16.5	15	60	35	28

Application example

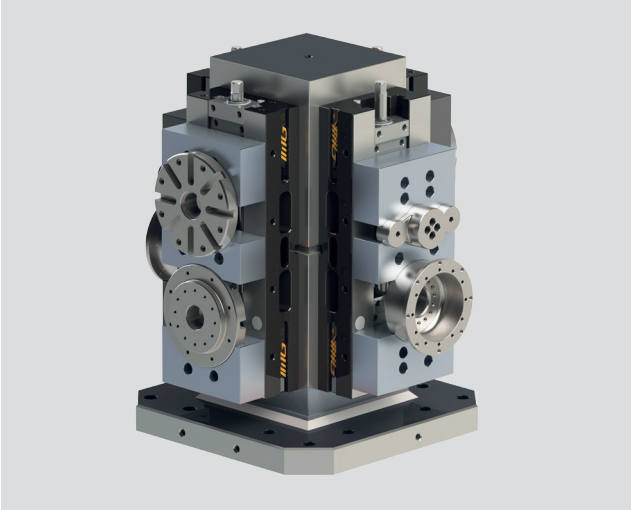

SMW-AUTOBLOK
Tombstones page 240

Quick change modular parallels

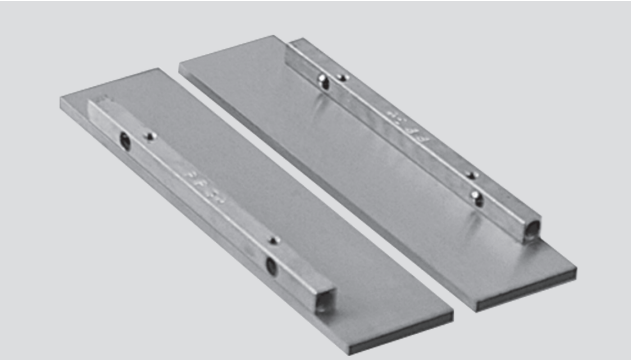

1 set = 2 pcs.

Type	Id. No.	A	B	C
For IMG 125	58455115	124	15	4
For IMG 125	58455120	124	20	4
For IMG 125	58455125	124	25	4
For IMG 160	58455315	159	15	4
For IMG 160	58455325	159	25	4
For IMG 160	58455335	159	35	4

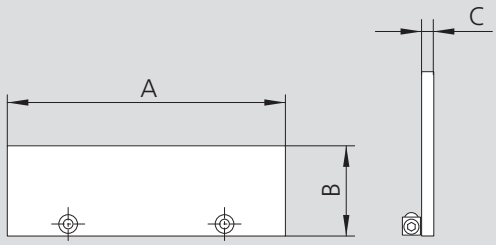

Application example:

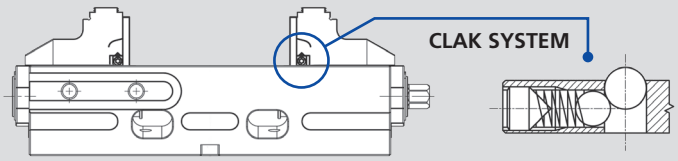

Torque wrench

Type	Id. No.
IMG-TW-125	58351719
IMG-TW-160	58361719

Workstop

Type	Id. No.
IMG-WS-125	58351719
IMG-WS-160	58361719

Positioning keys for T slot

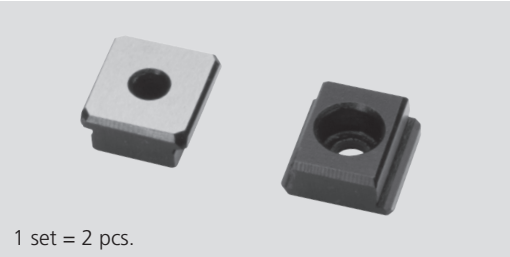

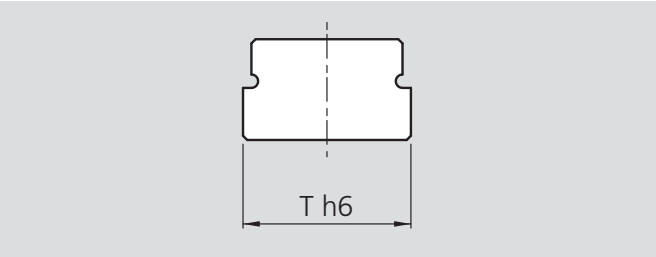

Type	mm 12 - h6	mm 14 - h6	mm 16 - h6	mm 18 - h6	mm 20 - h6	mm 22 - h6
Id. No.	58351392	58351393	58351394	58351395	58351396	58351397

Key for APS single use

Type	Id. No.
APS-KSU-140-190	46162333

Magnetic extractor for IMG protection

Type	Id. No.
IMG-ME	71290755

Clamps

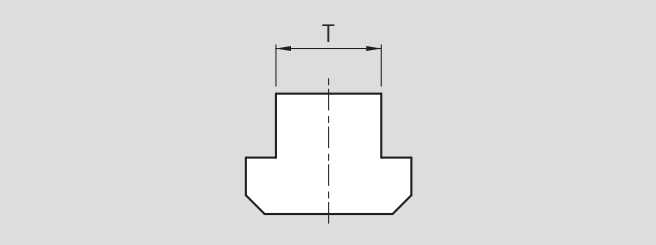

Type	T 12	T 14	T 16	T 18	T 20	T 22
Id. No.	58022792	58022793	58022794	58022795	58022796	58022797

SinterGrip jaws

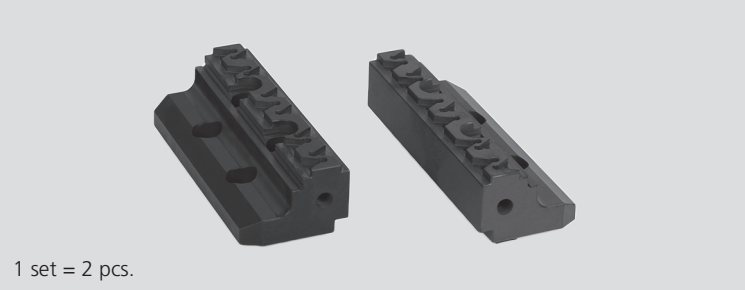

Type	Id. No.
IMG-SGJ-125	58351219
IMG-SGJ-160	58361219

Wrench

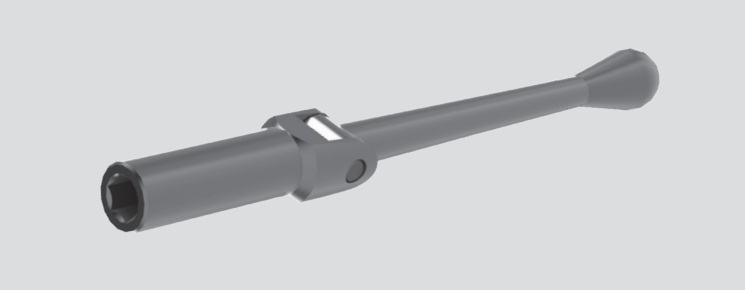

Type	Id. No.
IMG-W-125	58351910
IMG-W-160	58361910

Spindle group

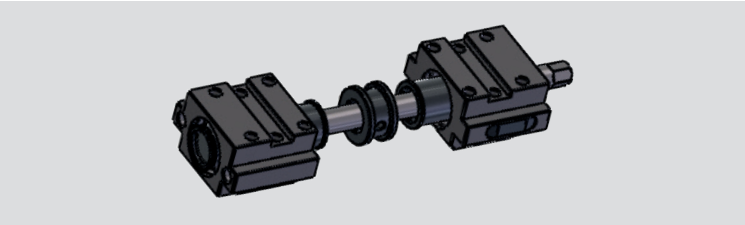

Type	Id. No.
IMG-SG-125-220	58359010
IMG-SG-125-320	58359020
IMG-SG-160-270	58369010
IMG-SG-160-420	58369020

Key for single use on APS (remains in vise body) for IMG 125 / 160

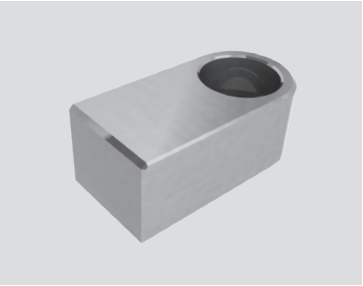

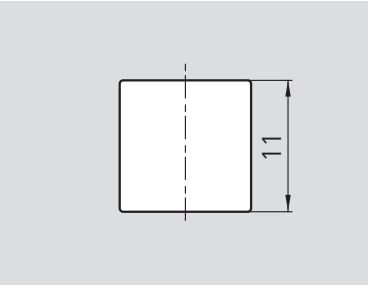

Type	Id. No.
IMG-KSU-125	58351312
IMG-KSU-160	58361312

Grip inserts smooth, height 11 mm

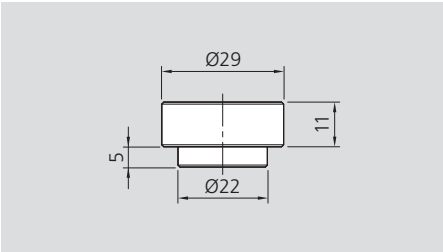

Smooth
Height 11 mm
Set consisting of 4 grippers and 4 fixing screws

Id. No.
58906114

Grip inserts serrated, height 11 mm

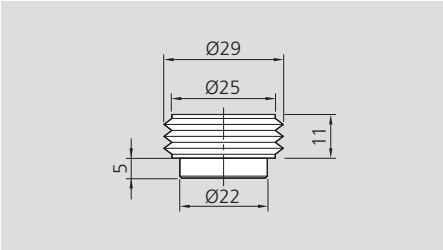

Serrated
Height 11 mm
Set consisting of 4 grippers and 4 fixing screws

Id. No.
58906124

Grip inserts smooth, height 19 mm

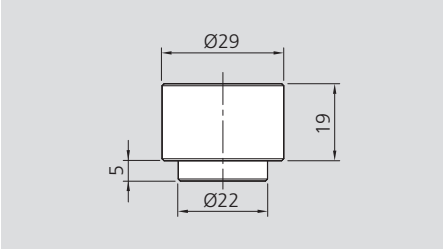

Smooth
Height 19 mm
Set consisting of 4 grippers and 4 fixing screws

Id. No.
58906214

Grip inserts serrated, height 19 mm

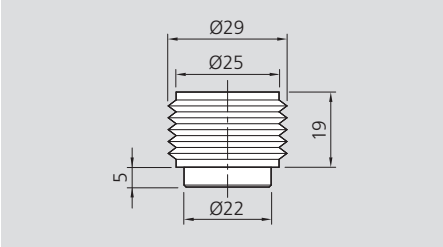

Serrated
Height 19 mm
Set consisting of 4 grippers and 4 fixing screws

Id. No.
58906224

Grip inserts smooth, height 24 mm

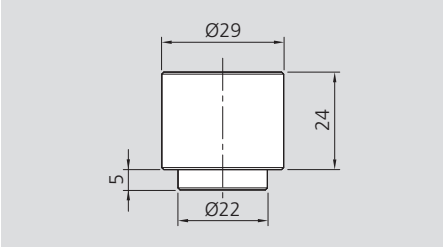

Smooth
Height 24 mm
Set consisting of 4 grippers and 4 fixing screws

Id. No.
58906314

Grip inserts serrated, height 24 mm

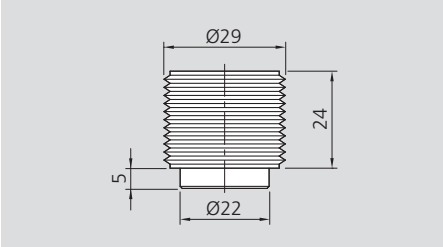

Serrated
Height 24 mm
Set consisting of 4 grippers and 4 fixing screws

Id. No.
58906324

Floating top jaw to use grip inserts 1

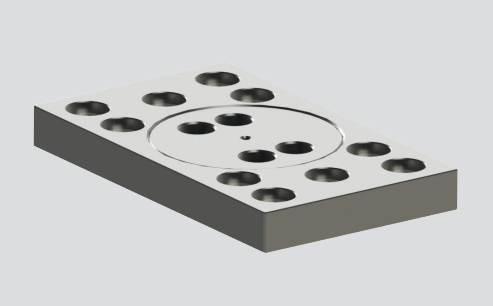

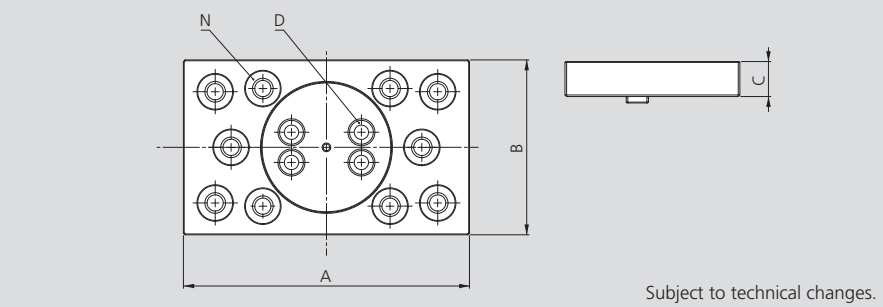

Type	Id. No.	A [mm]	B [mm]	D [mm]	N	C [mm]	Weight [kg]
IMG-FJG-125	58352520	180	110	M8	10	22	3.1
IMG-FJG-160	58362520	200	120	M10	10	22	2.7

Fixed / movable top jaw to use grip inserts 2

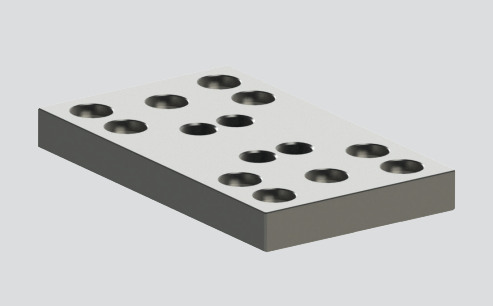

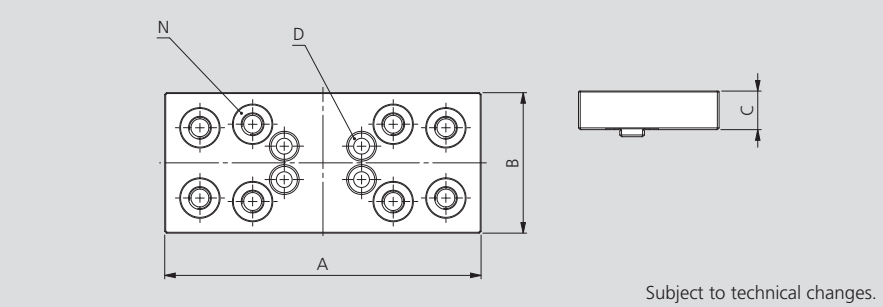

Type	Id. No.	A [mm]	B [mm]	D [mm]	N	C [mm]	Weight [kg]
IMG-FMJG-125	58352510	180	80	M10	8	22	2.3
IMG-FMJG-160	58362510	200	90	M10	8	22	3.7

Fixed middle top jaw for double clamping to use grip inserts 3

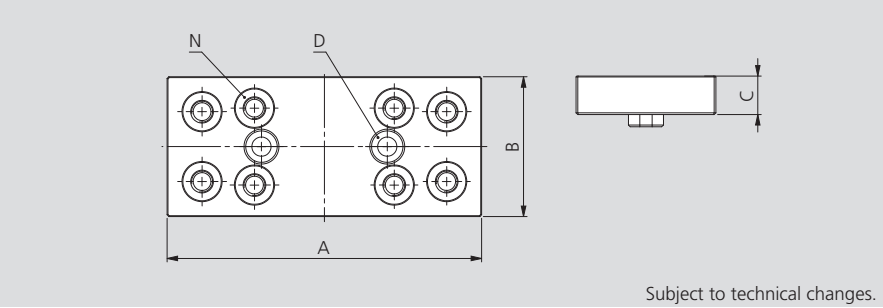

Type	Id. No.	A [mm]	B [mm]	D [mm]	N	C [mm]	Weight [kg]
IMG-FJDCG-125	58352530	180	80	M8	8	22	2.3
IMG-FJDCG-160	58362530	200	120	M10	10	22	2.9

Application examples

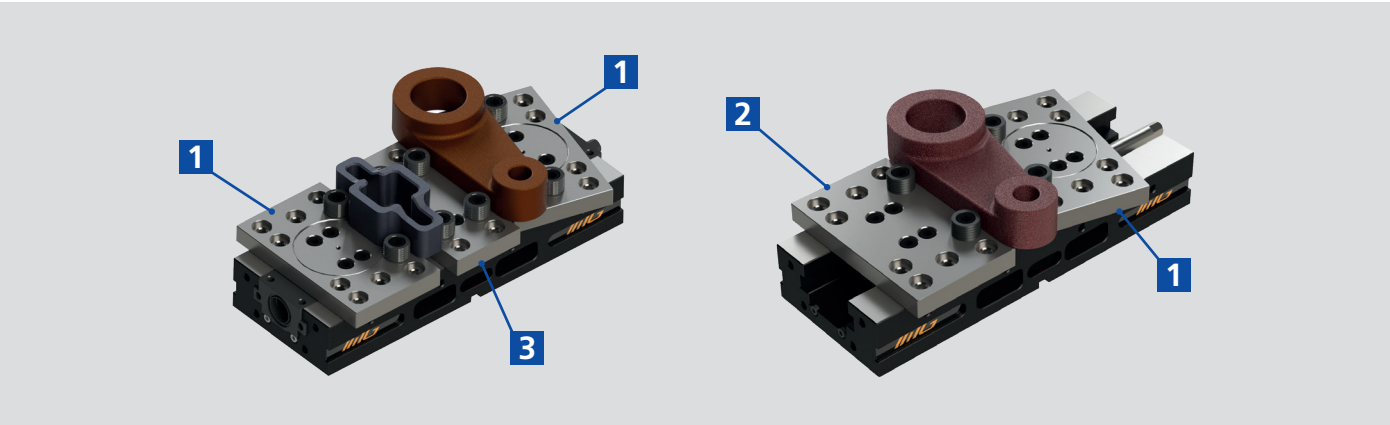

Floating jaws dimensions

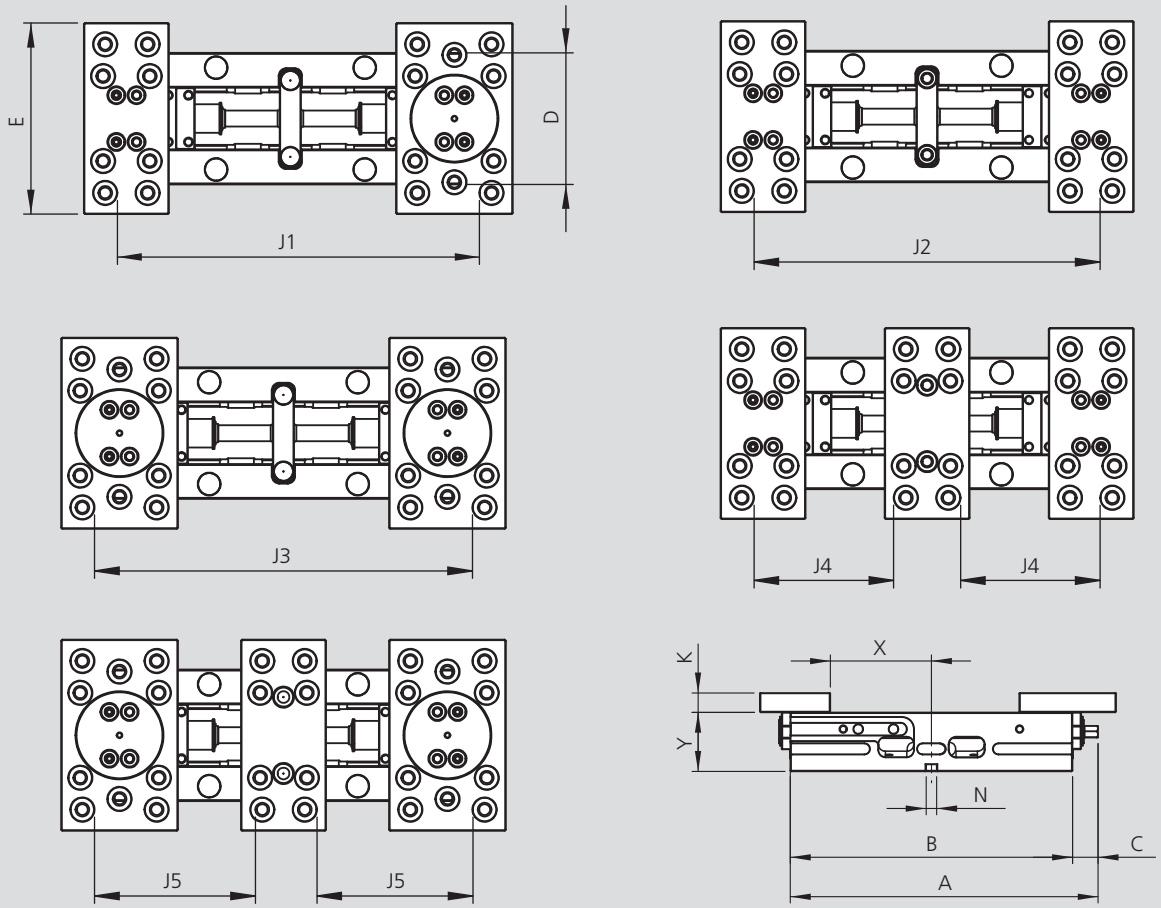

Subject to technical changes.

Type	A	B	C	D	E	K	N	X	Y	J1	J2	J3	J4	J5
For IMG 125-220	247	220	27	124	180	22	12	54	67	215	200	230	65,5	X
For IMG 125-320	349	320	29	124	180	22	12	115	67	335	349	350	125,5	140,5
For IMG 160-270	299	270	29	159	200	22	12	59,5	67	290	290	290	105,5	105,5
For IMG 160-420	449	420	29	160	200	22	12	150	67	448	448	448	184,5	184,5

Maximum diameters of floating jaws

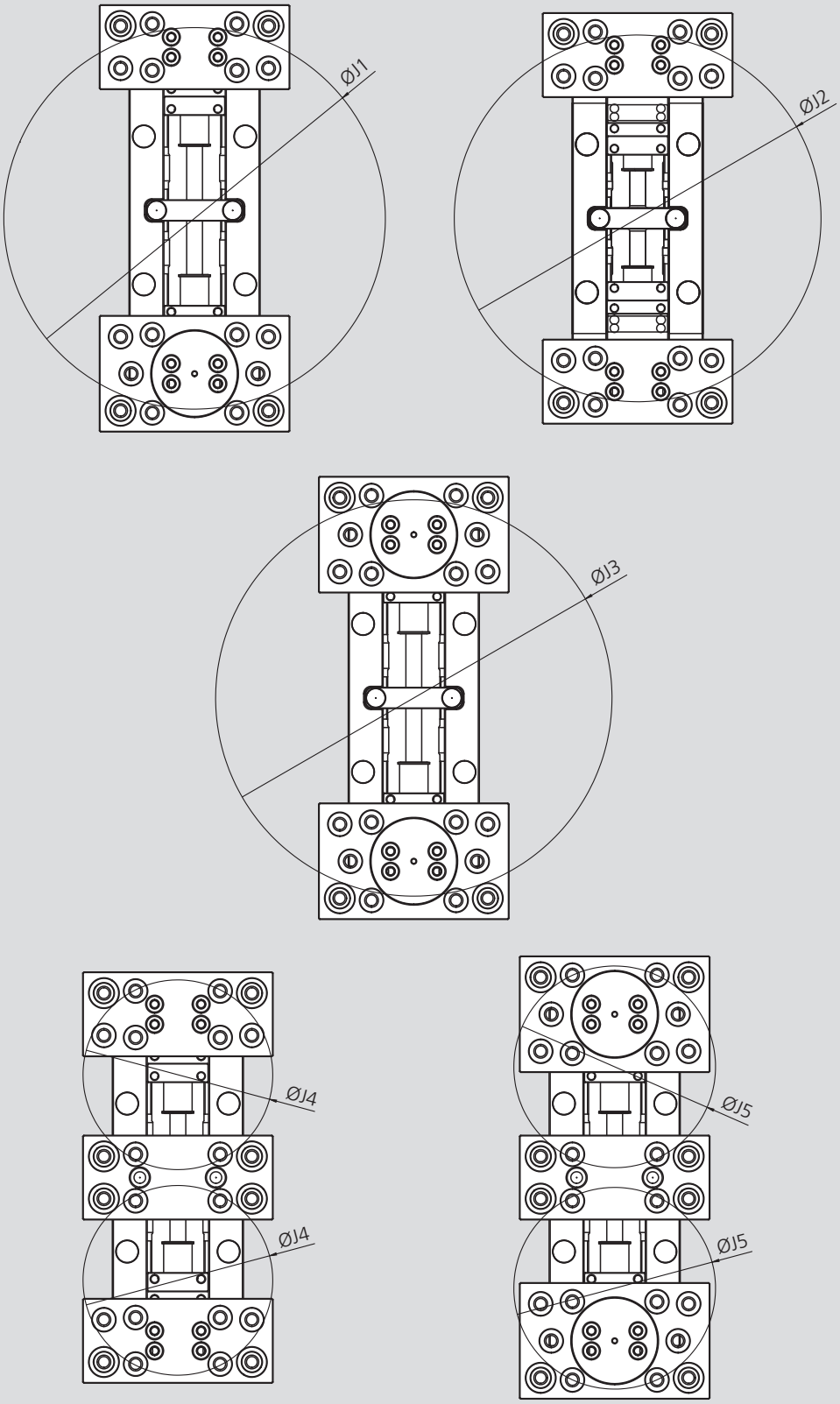

Subject to technical changes.

Type	ØJ1	ØJ2	ØJ3	ØJ4	ØJ5
For IMG 125-220	252	239	265	122	-
For IMG 125-320	360	347	375	179	190
For IMG 160-270	327	327	327	180	180
For IMG 160-420	441	441	441	224	224

Smooth jaws

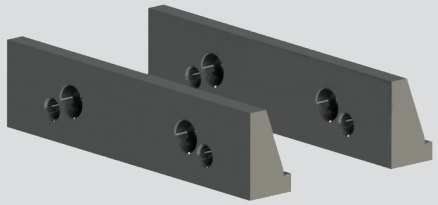

1 set = 2 pcs.

Type	Id. No.	Weight [kg]
IMG-SJ-125	58351415	0.6
IMG-SJ-160	58361415	1.45

Grooved jaws

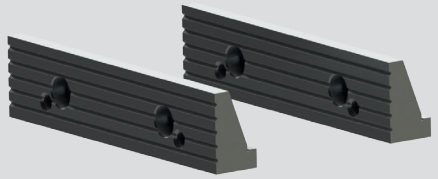

1 set = 2 pcs.

Type	Id. No.	Weight [kg]
IMG-GJ-125	58351425	0.6
IMG-GJ-160	58361425	1.4

Pull down jaws with supports

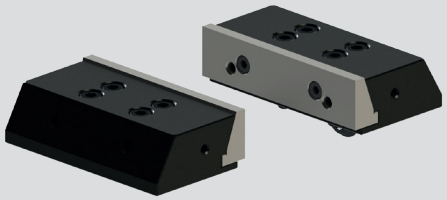

1 set = 2 pcs.

Type	Id. No.	Weight [kg]
IMG-SPDJ-125	58351419	4.1
IMG-SPDJ-160	58361419	8.3

Pull down jaws dimensions

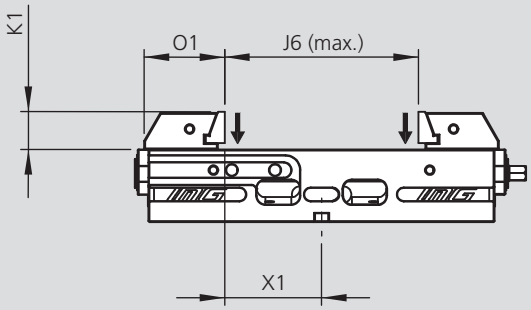

Subject to technical changes.

Type	K1 [mm]	O1 [mm]	X1 [mm]	J6 [mm]
For IMG 125-220	35	74,4	59,5	119
For IMG 125-320	35	74,4	119,5	239
For IMG 160-270	45	91,5	76	152
For IMG 160-420	45	91,5	155	310

IMG

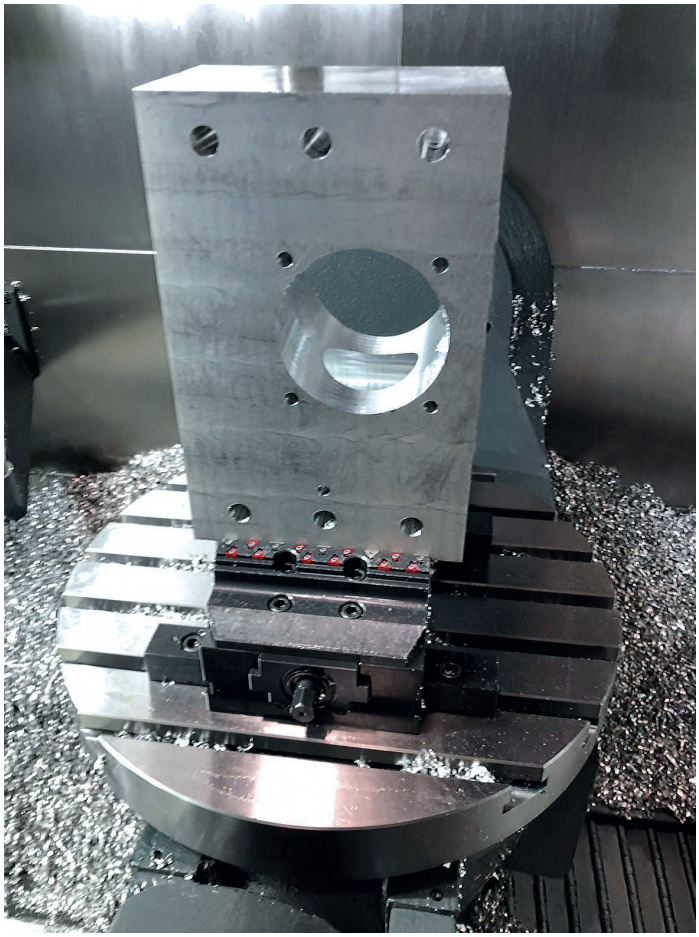

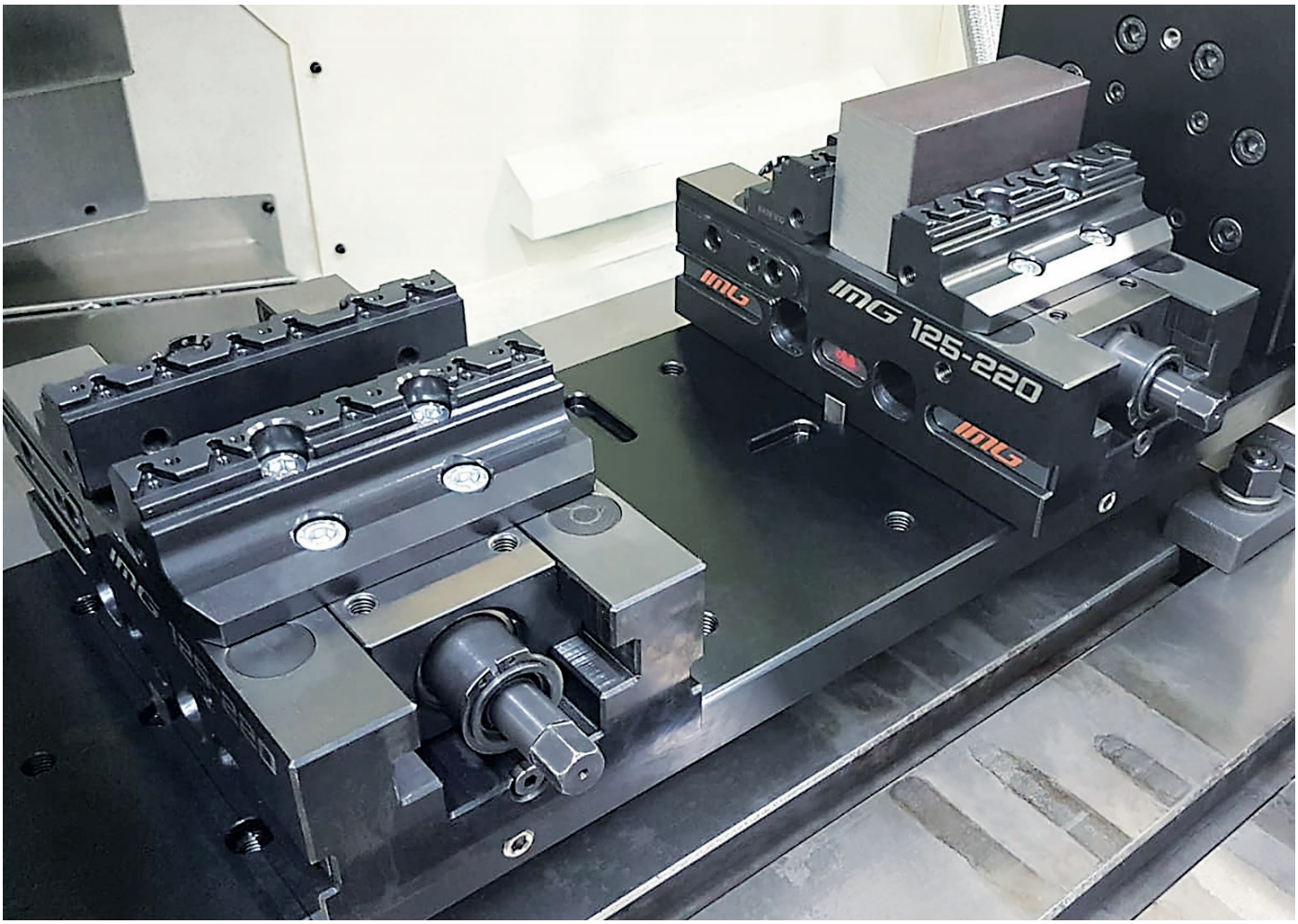

GTO – Universal stationary chuck for collets

Advantages of the stationary chuck:

- Rapid and easy mounting
- Quick change of the standard collets
- Sensitive adjustment of the clamping force possible
- Highest repeatability ≤ 0.01 mm
- Vertical or horizontal mounting possible
- Compact design, ideal for 5-axis machining
- Pull-down effect
- 3 versions for clamping diameters 4 until 100 mm

The **GTO** stationary chuck for standard collets is particularly impressive, above all due to its high gripping force, accuracy and rigidity. Lateral bearing surfaces also allow the chuck to be mounted vertically or horizontally.
Profitability is increased due to considerably reduced set-up times since collets can be changed very quickly. Thanks to its extremely compact design, the **GTO** is ideal for 5-axis machining.

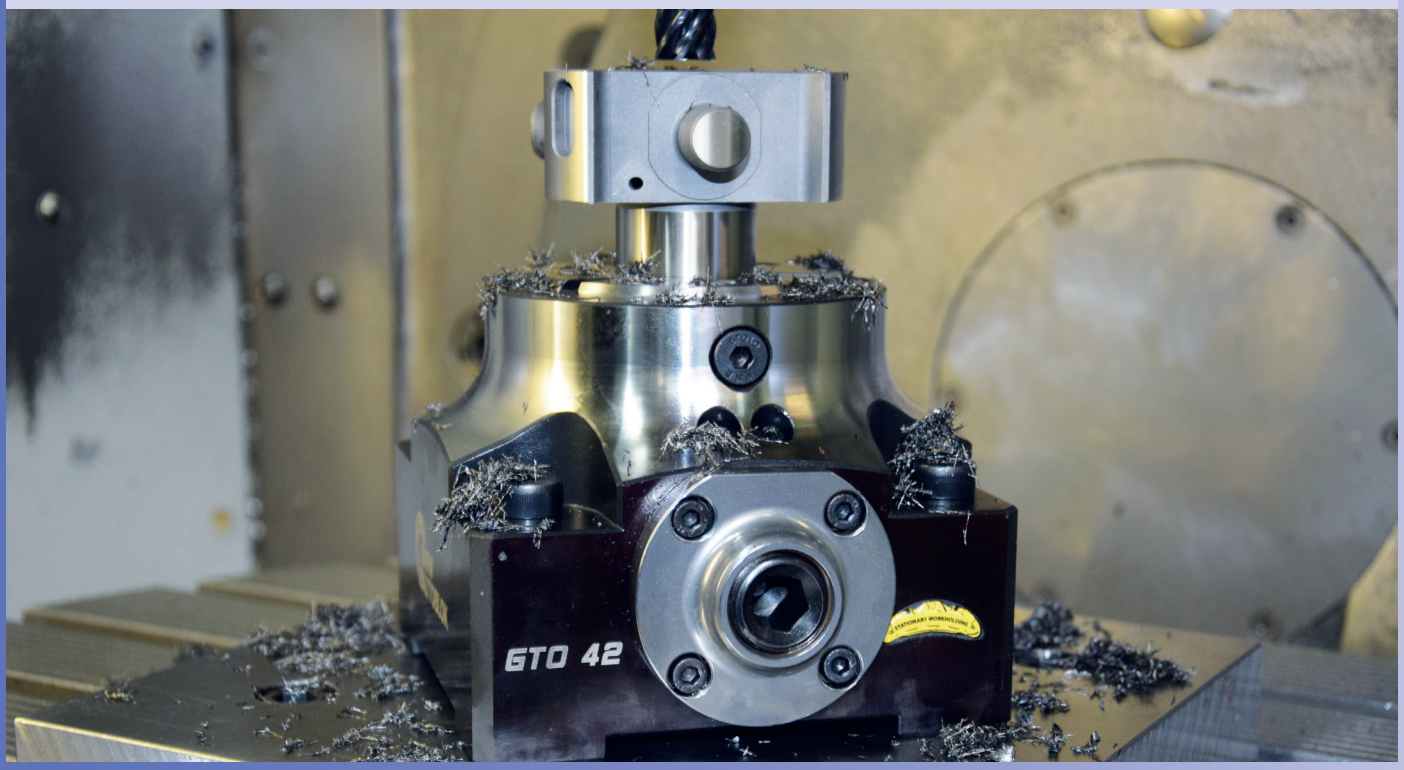

Stationary chuck

Page 184

GTO

Stationary chuck

- Manual actuated
- For standard collets
- Highest repeatability
- Sensitive adjustment of the clamping force

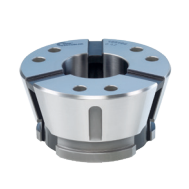

Page 185

GTO

Collets

- Collets for GTO
- Round, square, hexagonal

GTO

Stationary chuck

- For standard collets
- Manual actuated

Application/customer benefits

- Highest clamping forces and stiffness for best machining quality
- Maximum economy due to quick change of collets and fast mounting
- High flexibility due to the use of standard collets
- Ideal for 5-axis machining due to the compact design
- Sensitive adjustment of the clamping force

Technical features

- Manual actuated by fast clamping function (clamping wrench SW 12)
- Repeatability ≤ 0.01 mm
- Pull-down effect
- Workpiece stop optional
- Horizontal or vertical mounting
- Threads for mounting a front stop

Standard equipment

Stationary chuck with clamping wrench

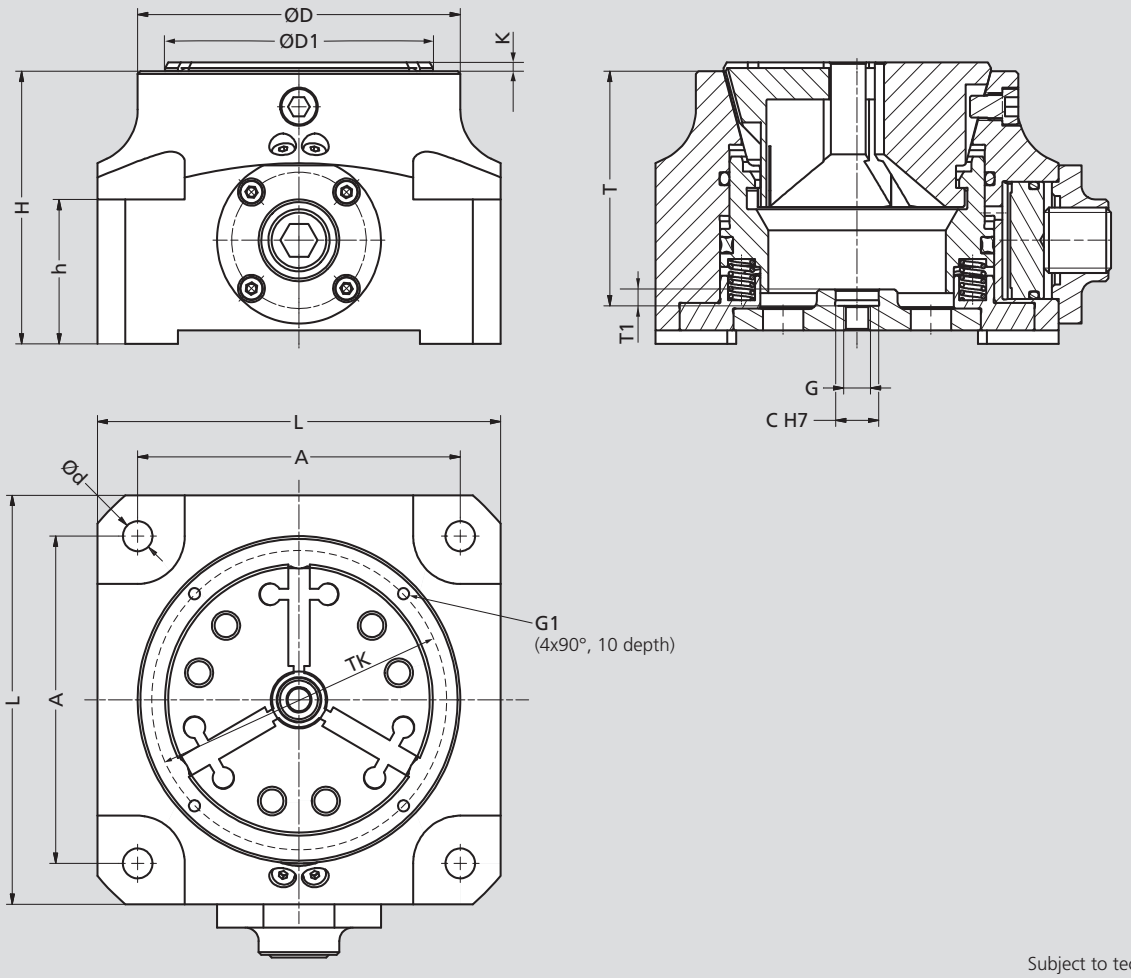

Subject to technical changes.

Order review

Type	Id.-No.	A	L	B	H	ØD	ØD1	Ød	h	K	G	G1	T	T1	TK	ØC	Max. [kN]	Clamp. range [mm]	Weight [kg]
GTO 42	462500	100	130	130	100	100	81	11	53	5.5	M8	M5	87	7	90	12	80	4 - 42	7.9
GTO 65	462501	120	150	150	100	120	101.2	11	53	6	M10	M5	86	6	110	16	105	4 - 65	9.6
GTO 100	462502	170	200	200	110	165	146	13	60	4	M12	M5	95	10	155	20	150	40 - 100	17.5

D1 = Diameter of the collet (unclamped)
Max. kN = Maximum total clamping force

Pneumatic actuated version on request.

Collets for GTO 42

Steel collets with axial and radial grooves (△ smooth, △△ radial grooves)
ROUND*

Ø	**4△**	**5△**	**6△**	**7△**	**8△△**	**9△△**	**10△△**	**11**	**12**	**13**	**14**	**15**	**16**
Id. No.	192173	192174	192175	192176	192177	192178	192179	192180	192181	192182	192183	192184	192185
Ø	**17**	**18**	**19**	**20**	**21**	**22**	**23**	**24**	**25**	**26**	**27**	**28**	**29**
Id. No.	192186	192187	192188	192189	192190	192191	192192	192193	192194	192195	192196	192197	192198
Ø	**30**	**31**	**32**	**33**	**34**	**35**	**36**	**37**	**38**	**39**	**40**	**41**	**42**
Id. No.	192199	192200	192201	192202	192203	192204	192205	192206	192207	192208	192209	192210	192211

Collets in 0.5 mm increments on request

Steel collets with smooth clamping surface
ROUND*

Ø	**4**	**5**	**6**	**7**	**8**	**9**	**10**	**11**	**12**	**13**	**14**	**15**	**16**
Id. No.	192173	192174	192175	192176	193135	193136	193137	193138	193139	193140	193141	193142	193143
Ø	**17**	**18**	**19**	**20**	**21**	**22**	**23**	**24**	**25**	**26**	**27**	**28**	**29**
Id. No.	193144	192807	193145	192808	193146	193147	193148	193149	193150	193151	193152	193153	193154
Ø	**30**	**31**	**32**	**33**	**34**	**35**	**36**	**37**	**38**	**39**	**40**	**41**	**42**
Id. No.	193155	193156	193083	193157	193158	193159	193160	193161	193162	193163	193164	193165	193219

Collets in 0.5 mm increments on request

SQUARE**

□	**7△**	**8△△**	**9△△**	**10△△**	**11△△**	**12△△**	**13△△**	**14△△**	**15△△**	**16△△**	**17△△**	**18△△**	**19△△**
Id. No.	192212	192213	192214	192215	192216	192217	192218	192219	192220	192221	192222	192223	192224
□	**20△△**	**21△△**	**22△△**	**23△△**	**24△△**	**25△△**	**26△△**	**27△△**	**28△△**	**29△△**	**30△△**		
Id. No.	192225	192226	192227	192228	192229	192230	192231	192232	192233	192234	192235		

HEXAGONAL**

⬡	**7△**	**8△△**	**9△△**	**10△△**	**11△△**	**12△△**	**13△△**	**14△△**	**15△△**	**16△△**	**17△△**	**18△△**	**19△△**
Id. No.	192236	192237	192238	192239	192240	192241	192242	192243	192244	192245	192246	192247	192248
⬡	**20△△**	**21△△**	**22△△**	**23△△**	**24△△**	**25△△**	**26△△**	**27△△**	**28△△**	**29△△**	**30△△**	**31△△**	**32△△**
Id. No.	192249	192250	192251	192252	192253	192254	192255	192256	192257	192258	192259	192260	192261

Soft steel collets (pre-bored)
ROUND

Ø	**5**	**15**	**30**										
Id. No.	192262	192263	192264										

Boring ring 42 for soft steel collets

Id. No.	193399												

* Concentricity similar DIN 6343
** Concentricity has to be agreed

Collets for GTO 65

Steel collets with axial and radial grooves (△ smooth, △△ radial grooves)
ROUND*

Ø	**5△**	**6△**	**7△**	**8△△**	**9△△**	**10△△**	**11**	**12**	**13**	**14**	**15**	**16**	**17**
Id. No.	192265	192266	192267	192268	192269	192270	192271	192272	192273	192274	192275	192276	192277
Ø	**18**	**19**	**20**	**21**	**22**	**23**	**24**	**25**	**26**	**27**	**28**	**29**	**30**
Id. No.	192278	192279	192280	192281	192282	192283	192284	192285	192286	192287	192288	192289	192290
Ø	**31**	**32**	**33**	**34**	**35**	**36**	**37**	**38**	**39**	**40**	**41**	**42**	**43**
Id. No.	192291	192292	192293	192294	192295	192296	192297	192298	192299	192300	192301	192302	192303
Ø	**44**	**45**	**46**	**47**	**48**	**49**	**50**	**51**	**52**	**53**	**54**	**55**	**56**
Id. No.	192304	192305	192306	192307	192308	192309	192310	192311	192312	192313	192314	192315	192316
Ø	**57**	**58**	**59**	**60**	**61**	**62**	**63**	**64**	**65**				
Id. No.	192317	192318	192319	192320	192321	192322	192323	192324	192325				

Collets in 0.5 mm increments on request

Steel collets with smooth clamping surface
ROUND*

Ø	**5**	**6**	**7**	**8**	**9**	**10**	**11**	**12**	**13**	**14**	**15**	**16**	**17**
Id. No.	192265	192266	192267	193172	193173	192682	193174	192787	193175	193176	193177	193169	193178
Ø	**18**	**19**	**20**	**21**	**22**	**23**	**24**	**25**	**26**	**27**	**28**	**29**	**30**
Id. No.	193179	193180	193181	193182	192683	193183	193170	193065	193184	193066	193068	193069	193070
Ø	**31**	**32**	**33**	**34**	**35**	**36**	**37**	**38**	**39**	**40**	**41**	**42**	**43**
Id. No.	193185	192684	193186	193187	193188	193189	193190	193191	193192	192685	193193	193194	193171
Ø	**44**	**45**	**46**	**47**	**48**	**49**	**50**	**51**	**52**	**53**	**54**	**55**	**56**
Id. No.	193196	193197	193198	193199	193200	193201	193202	193203	193204	193205	193206	193207	193208
Ø	**57**	**58**	**59**	**60**	**61**	**62**	**63**	**64**	**65**				
Id. No.	193195	193209	193210	193211	193212	193213	193214	193215	193216				

Collets in 0.5 mm increments on request

SQUARE**

□	**8△△**	**9△△**	**10△△**	**11△△**	**12△△**	**13△△**	**14△△**	**15△△**	**16△△**	**17△△**	**18△△**	**19△△**	**20△△**
Id. No.	192326	192327	192328	192329	192330	192331	192332	192333	192334	192335	192336	192337	192338
□	**21△△**	**22△△**	**23△△**	**24△△**	**25△△**	**26△△**	**27△△**	**28△△**	**29△△**	**30△△**	**31△△**	**32△△**	**33△△**
Id. No.	192339	192340	192341	192342	192343	192344	192345	192346	192347	192348	192349	192350	192351
□	**34△△**	**35△△**	**36△△**	**37△△**	**38△△**	**39△△**	**40△△**	**41△△**	**42△△**	**43△△**	**44△△**	**45△△**	**46△△**
Id. No.	192352	192353	192354	192355	192356	192357	192358	192359	192360	192361	192362	192363	192364

HEXAGONAL**

⬡	**10△△**	**11△△**	**12△△**	**13△△**	**14△△**	**15△△**	**16△△**	**17△△**	**18△△**	**19△△**	**20△△**	**21△△**	**22△△**
Id. No.	192365	192366	192367	192368	192369	192370	192371	192372	192373	192374	192375	192376	192377
⬡	**23△△**	**24△△**	**25△△**	**26△△**	**27△△**	**28△△**	**29△△**	**30△△**	**31△△**	**32△△**	**33△△**	**34△△**	**35△△**
Id. No.	192378	192379	192380	192381	192382	192383	192384	192385	192386	192387	192388	192389	192390
⬡	**36△△**	**37△△**	**38△△**	**39△△**	**40△△**	**41△△**	**42△△**	**43△△**	**44△△**	**45△△**	**46△△**	**47△△**	**48△△**
Id. No.	192391	192392	192393	192394	192395	192396	192397	192398	192399	192400	192401	192402	192403
⬡	**49△△**	**50△△**											
Id. No.	192404	192405											

Soft steel collets (pre-bored)
ROUND

Ø	**8**	**20**	**40**										
Id. No.	192406	192407	192408										

Boring ring 65 for soft steel collets

Id. No.	193400												

* Concentricity similar DIN 6343
** Concentricity has to be agreed

Collets for GTO 100

Steel collets with axial and radial grooves ROUND*

Ø	**42**	**43**	**44**	**45**	**46**	**47**	**48**	**49**	**50**	**51**	**52**	**53**	**54**
Id. No.	195081	195082	195083	195084	195085	195086	195087	195088	195089	195090	195091	195092	195093
Ø	**55**	**56**	**57**	**58**	**59**	**60**	**61**	**62**	**63**	**64**	**65**	**66**	**67**
Id. No.	195094	195095	195096	195097	195098	195099	195100	195101	195102	195103	195104	195105	195106
Ø	**68**	**69**	**70**	**71**	**72**	**73**	**74**	**75**	**76**	**77**	**78**	**79**	**80**
Id. No.	195107	195108	195109	195110	195111	195112	195113	195114	195115	195116	195117	195118	195119
Ø	**81**	**82**	**83**	**84**	**85**	**86**	**87**	**88**	**89**	**90**	**91**	**92**	**93**
Id. No.	195120	195121	195122	195123	195124	195125	195126	195127	195128	195129	195130	195131	195132
Ø	**94**	**95**	**96**	**97**	**98**	**99**	**100**						
Id. No.	195133	195134	195135	195136	195137	195138	194742						

Steel collets with smooth clamping surface ROUND*

Ø	**42**	**43**	**44**	**45**	**46**	**47**	**48**	**49**	**50**	**51**	**52**	**53**	**54**
Id. No.	195141	195142	195143	195144	195145	195146	195147	195148	195149	195150	195151	195152	195153
Ø	**55**	**56**	**57**	**58**	**59**	**60**	**61**	**62**	**63**	**64**	**65**	**66**	**67**
Id. No.	195154	195155	195156	195157	195158	195159	195160	195161	195162	195163	195164	195165	195166
Ø	**68**	**69**	**70**	**71**	**72**	**73**	**74**	**75**	**76**	**77**	**78**	**79**	**80**
Id. No.	195167	195168	195169	195170	195171	195172	195173	195174	195175	195176	195177	195178	195179
Ø	**81**	**82**	**83**	**84**	**85**	**86**	**87**	**88**	**89**	**90**	**91**	**92**	**93**
Id. No.	195180	195181	195182	195183	195184	195185	195186	195187	195188	194743	195189	195190	195191
Ø	**94**	**95**	**96**	**97**	**98**	**99**	**100**						
Id. No.	195192	195193	195194	195195	195196	195197	195198						

* Concentricity similar DIN 6343

Changing device for GTO 42, 65, 100

Changing device

Size / Accessories	GTO 42	GTO 65	GTO 100
manual	196842	196844	-
pneumatic	192151	192153	194744

Twin Vises

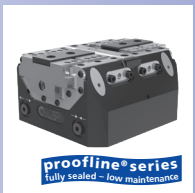

Page 192

PTP

Protected pneumatic vise 100, 125, 160, 200

- Protected against swarf and chips
- Pneumatic version
- Normal stroke: PTP-N / Long stroke: PTP-L
- Fixed jaw: PTP-F
- Pneumatic jaw stroke control valve
- Air purge
- Air sensing

Page 194

PTH

Protected hydraulic vise 100, 125, 160, 200

- Protected against swarf and chips
- Hydraulic version
- Normal stroke: PTH-N / Long stroke: PTH-L
- Pneumatic jaw stroke control valve
- Air purge
- Air sensing

Page 198

STV-2

Spring and air operated vise 125, 180, 225

- Protected
- Springs to clamp, pneumatic to open
- Turbo function to increase the clamping forces
- Pneumatic jaw stroke control valve
- Normal stroke: STV-2N / Long stroke: STV-2L
- Air purge
- Air sensing

Page 200

STV-3

Spring and air operated vise 125, 180, 225

- Protected
- 3 jaws
- Springs to clamp, pneumatic to open
- Turbo function to increase the clamping forces
- Normal stroke: STV-3N
- Pneumatic jaw stroke control valve
- Air purge

Page 204

TVP

Pneumatic vise 100, 160, 200, 250, 315

- Normal stroke: TVP-N
- Long stroke: TVP-L
- Fixed jaw: TVP-F
- Air purge

Page 206

TVH

Hydraulic vise 100, 160, 200

- Normal stroke: TVH-N
- Long stroke: TVH-L
- Air purge

Page 210

SAB-1

Safety valve (optional)

- To maintain air pressure during pallet transportation / storage and machining

Page 212

Jaws

Accessories

- Soft blank top jaws
- Hard blank top jaws
- Tongue & groove or fine serration 1.5 mm x 60°
- Jaws for SinterGrip

4

Twin Vises

Range of products

Industry 4.0 Product

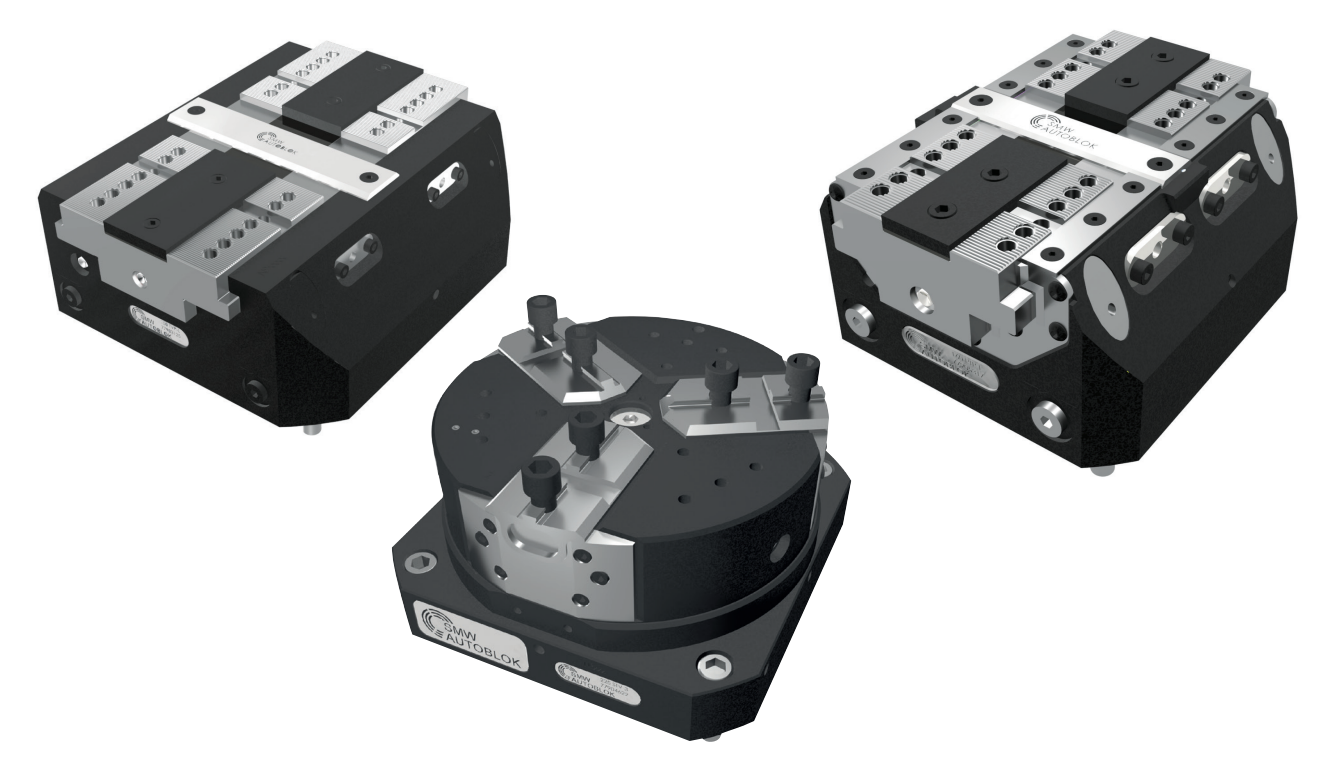

1 PT - Protected Twin Vises

Sizes 100-125-160-200-250 available

- Pneumatic and hydraulic version
- Pneumatic valve (optional)
- Air sensing
- Master jaws guide protected against swarf and chips 1.1
- Normal stroke
- Long stroke
- Fixed jaw

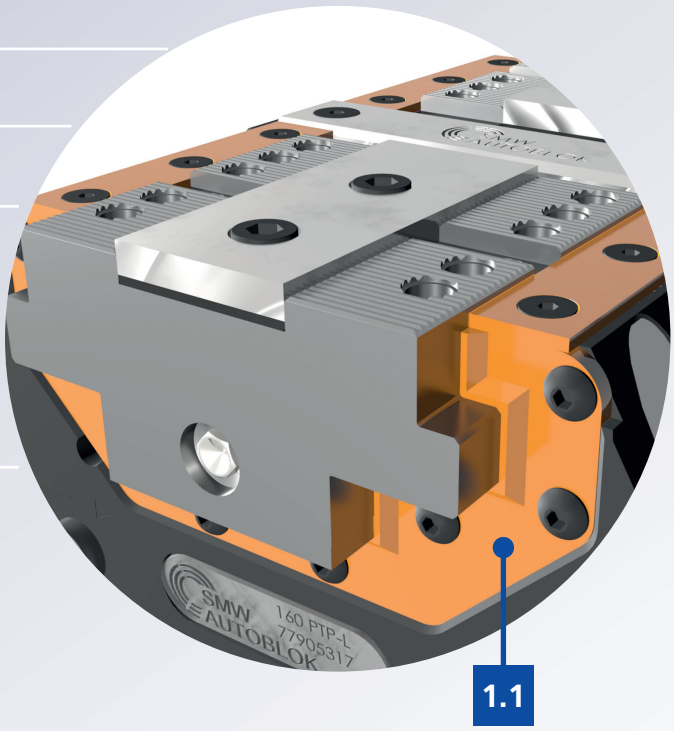

2 STV - Spring and air operated Twin Vises

Sizes 180-225 available

- STV 2 jaws (also 125) and STV 3 jaws
- Air sensing
- Master jaws guide protected against swarf and chips
- Spring clamped and air operated 2.1 2.2
- Safety valve SAB-1 (optional)
- Pneumatic valve (optional)
- Normal stroke
- Long stroke

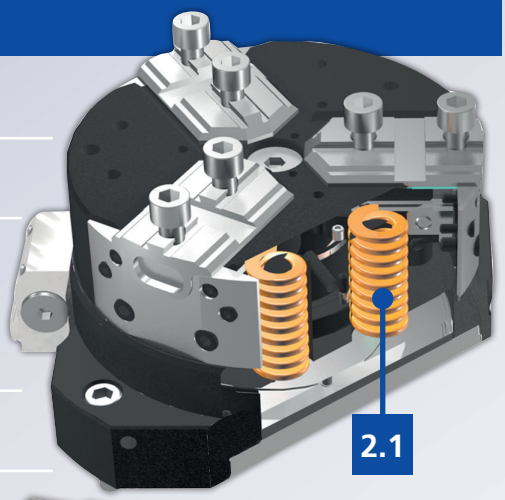

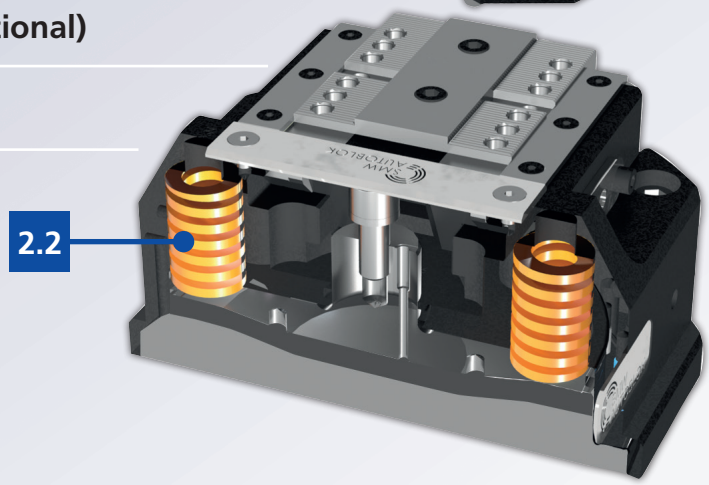

3 TV - Standard Twin Vises

Sizes 100-160-200-250-315 available

- Pneumatic and hydraulic version
- Air sensing 3.1
- Stroke control proximity (optional)
- Normal stroke
- Long stroke
- Fixed jaw

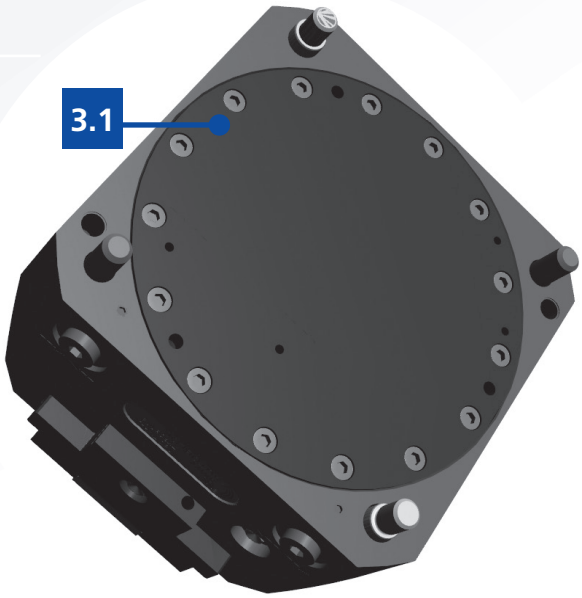

PTP-N/PTP-L/PTP-F

Protected pneumatic Twin Vise

- Pneumatic version
- Pneumatic open / close control (stroke control) master jaws valve

- PTP-N: Normal stroke
- PTP-L: Long stroke
- PTP-F: One fixed jaw

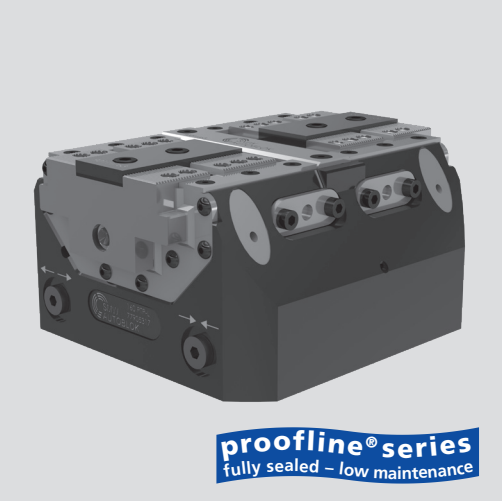

Application/customer benefits

- Compact design
- Master jaws guide protected against swarf and chips (proofline)
- Highest repeatability
- Highest rigidity
- Linear pressure adjustment

Technical features

- Housing and functional parts hardened for high precision and long life
- Ready for air purge
- Ready for central grease lubrication
- Master jaws with both tongue & groove and fine serration 1.5 mm x 60°
- OD and ID clamping
- Pneumatic open / close control (stroke control) master jaws valve (optional)
- Air sensing
- Lubrication with SMW-AUTOBLOK K67 grease
- Stroke control via proximity switches (optional) on all types and sizes except 100 PTP-F
- 100 PTP-F only one stroke control via proximity switch for full closed vise

Standard equipment

Self-centering vise without top jaws
All bolts and centering bushings included

Gripping force diagrams

PTP-N ■100 ■125 ■160 ■200

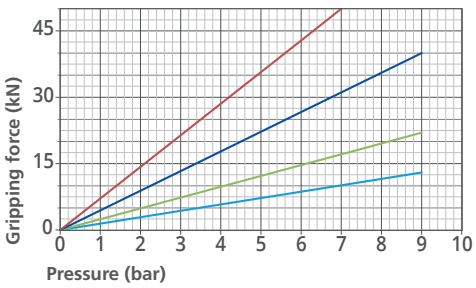

PTP-L ■100 ■125 ■160 ■200

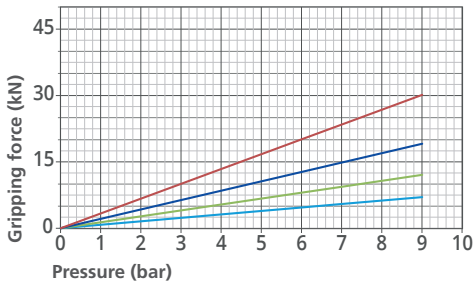

PTP-F ■100 ■125 ■160 ■200

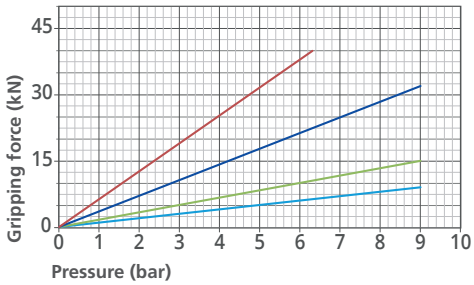

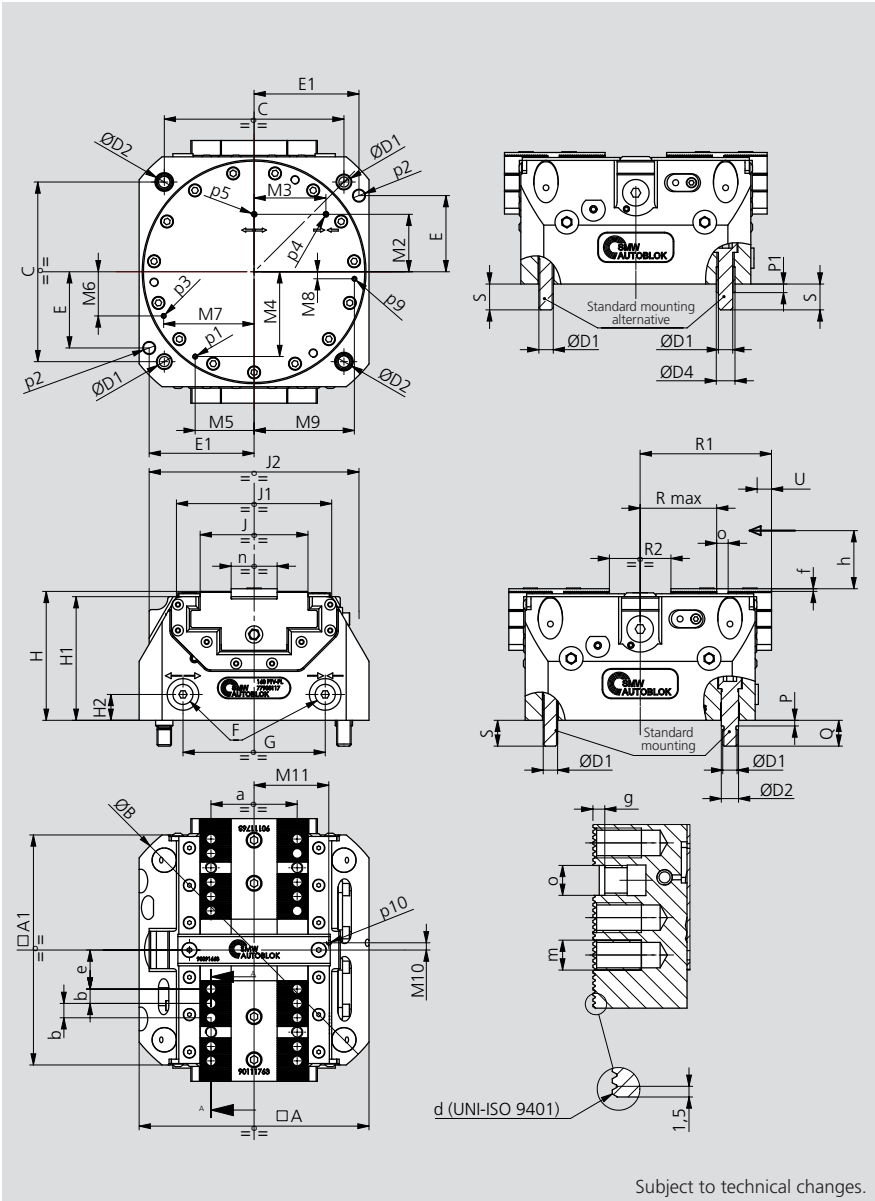

Subject to technical changes.

PTP-N/PTP-L/PTP-F

- Pneumatic version
- Pneumatic open / close control (stroke control) master jaws valve
- PTP-N: Normal stroke
- PTP-L: Long stroke
- PTP-F: One fixed jaw

Protected pneumatic Twin Vise

Type	Id. No.	Stroke type	Stroke / jaw [mm]	Clamping force max. [kN]	Piston area [cm²]	Operating pressure max. [bar]	Repeatability [mm]	Weight [kg]
100 PTP-N	77905211	Normal	2.6	13	45	9	0.01	5.5
100 PTP-L	77905311	Long	6	7				
100 PTP-F	77905411	Fixed jaw	6	9				
125 PTP-N	77905212	Normal	2.6	22	78	9	0.01	7
125 PTP-L	77905312	Long	6	12				
125 PTP-F	77905412	Fixed jaw	6	15				
160 PTP-N	77905217	Normal	3	40	128	9	0.01	13
160 PTP-L	77905317	Long	8.4	19				
160 PTP-F	77905417	Fixed jaw	8.4	32				
200 PTP-N	77905221	Normal	4.2	50	194	7	0.02	23
200 PTP-L	77905321	Long	10.2	30		9		
200 PTP-F	77905421	Fixed jaw	10.2	38		6		

SMW-AUTOBLOK Type PTP			100	125	160	200
	A	mm	100	125	160	200
	A1	mm	110	125	160	200
	B(Ø)	mm	136	162	205	255
	C	mm	80	100	125	160
	D1(Ø)	mm	M8	M8	M10	M12
	D2 (Øf7)	mm	10	10	12	14
	D4 (Øjs7)	mm	11	11	13	16
	E	mm	32	/	53	73
	E1	mm	45	/	73	92
	F	mm	M5	M5	G1/8"	G1/8"
	G	mm	59	59	99	127
	H	mm	75.5	80.5	89.7	97
	H1	mm	72	77	86	93
	H2	mm	15	17	18	18
	J	mm	47	47	75	94
	J1	mm	82	100	108	144
	J2	mm	100	121	146	166
	M2	mm	32	32	40	50
	M3	mm	29.5	29.5	50	65
	M4	mm	34.2	40.5	59	72.8
	M5	mm	27.7	38.5	41	52.9
	M6	mm	14.2	10.6	30.7	39.5
	M7	mm	41.1	54.5	62.9	80.9
	M8	mm	8.3	4.8	4.9	9.4
	M9	mm	42.7	55.3	69.8	89.5
	M10	mm	5	5	5	8
	M11	mm	34	34	52	60
	P	mm	4	4	4	5
	P1	mm	4	4	6	6
	Q	mm	15	15	18	20
	R max	mm	25.6 / 31.6	25.6 / 31.6	44.8 / 53.2	54.5 / 64.7
Min. / max. (long stroke)	**R max**	mm	25.4 / 28	25.4 / 28	45 / 48	54.5 / 58.7
Min. / max. (normal stroke)	**R max**	mm	25.6 / 31.6	25.6 / 31.6	44.8 / 53.2	54.5 / 64.7
Min. / max. (fixed jaw)	**R1**	mm	57.5 / 63.5	64,5 / 70,5	82.5 / 90.9	102.5 / 112.7
Min. / max. (long stroke)	**R1**	mm	57.4 / 60	64.4 / 67	82.5 / 85.5	102.8 / 107
Min. / max. (normal stroke)	**R1**	mm	57.5 / 63.5	64.5 / 70.5	82.5 / 90.9	102.5 / 112.7
Min. / max. (fixed jaw)	**R2**	mm	20 / 32	20 / 32	26 / 42.8	30 / 50.4
Min. / max. (long stroke)	**R2**	mm	19.8 / 25	19.8 / 25	26 / 32	30.6 / 39
Min. / max. (normal stroke)	**R2**	mm	20 / 26	20 / 26	26 / 34.4	30 / 40.2
Min. / max. (fixed jaw)	**S**	mm	15	15	18	20
	U	mm	6	6	8.4	10.2
Long stroke	**U**	mm	2.6	2.6	3	4.2
Normal stroke	**U**	mm	6	6	8.4	10.2
Fixed jaw	**a**	mm	35	35	60	80
	b	mm	7	7	10	10
	d	mm	1.5 x 60°	1.5 x 60°	1.5 x 60°	1.5 x 60°
Serration	**e**	mm	14.6 / 20.6	14.6 / 20.6	18.8 / 27.2	28.5 / 38.7
Min. / max. (long stroke) (fixed jaw)	**e**	mm	14.4 / 17	14.4 / 17	19 / 22	28.5 / 32.7
Min. / max. (normal stroke)	**f**	mm	1.8	1.8	1.8	2
	g	mm	2.7	2.7	3.2	4
	h	mm	16	16	25	35
	m	mm	M6x10	M6x10	M8x12	M8x12
	n (g6)	mm	20	20	32	40
	o (H7)	mm	6	6	8	8
	p1	mm	M4	M4	M4	M4
Lubrication fitting	**p2 (øH7)**	mm	/	/	8x14	8x14
	p3	mm	M4	M4	M4	M4
Pneumatic open / close - stroke control master jaws or air purge	**p4**	mm	M4	M4	M4	M4
Vise closed	**p5**	mm	M4	M4	M4	M4
Vise open	**p9**	mm	M4	M4	M4	M4
Air sensing connection	**p10**	mm	M4	M4	M4	M4
Air sensing outlet (under front plate)	**p9**	mm	M4	M4	M5	M5
Air sensing outlet (under front plate)	**p10**	mm	M4	M4	M4	M4

PTH-N/PTH-L/PTH-F

Protected hydraulic Twin Vise

- Hydraulic version
- Pneumatic open / close control (stroke control) master jaws valve

- PTH-N: Normal stroke
- PTH-L: Long stroke
- PTH-F: One fixed Jaw

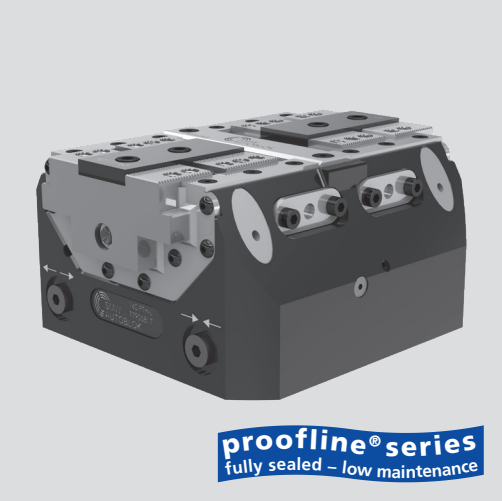

Application/customer benefits

- Compact design
- Master jaws guide protected against swarf and chips
- Highest repeatability
- Highest rigidity
- Linear pressure adjustment

Technical features

- Housing and functional parts hardened for high precision and long life
- Ready for air purge
- Ready for central grease lubrication
- Master jaws with both tongue & groove and fine serration 1.5 mm x 60°
- OD and ID clamping
- Pneumatic open / close control (stroke control) master jaws valve (optional)
- Air sensing
- Lubrication with SMW-AUTOBLOK K67 grease
- Stroke control via proximity switches (optional) on all types and sizes except 100 PTH-F
- 100 PTH-F: Only one stroke control via proximity switch for full closed vise

Standard equipment

Self-centering vise without top jaws
All bolts and centering bushings included

Gripping force diagrams

PTH-N 100 125 160 200

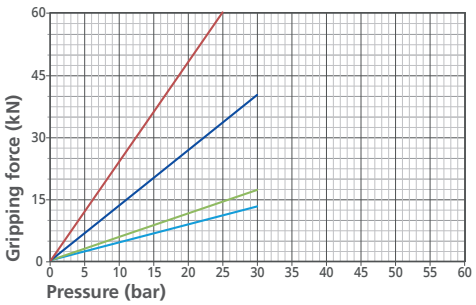

PTH-L 100 125 160 200 250

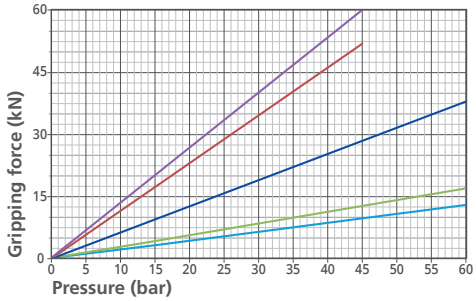

PTH-F 100 125 160 200

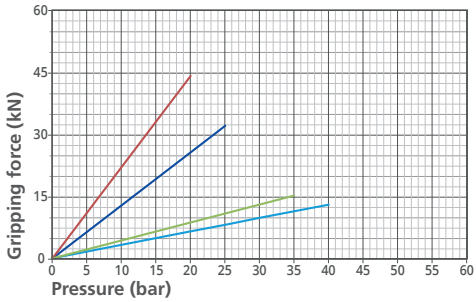

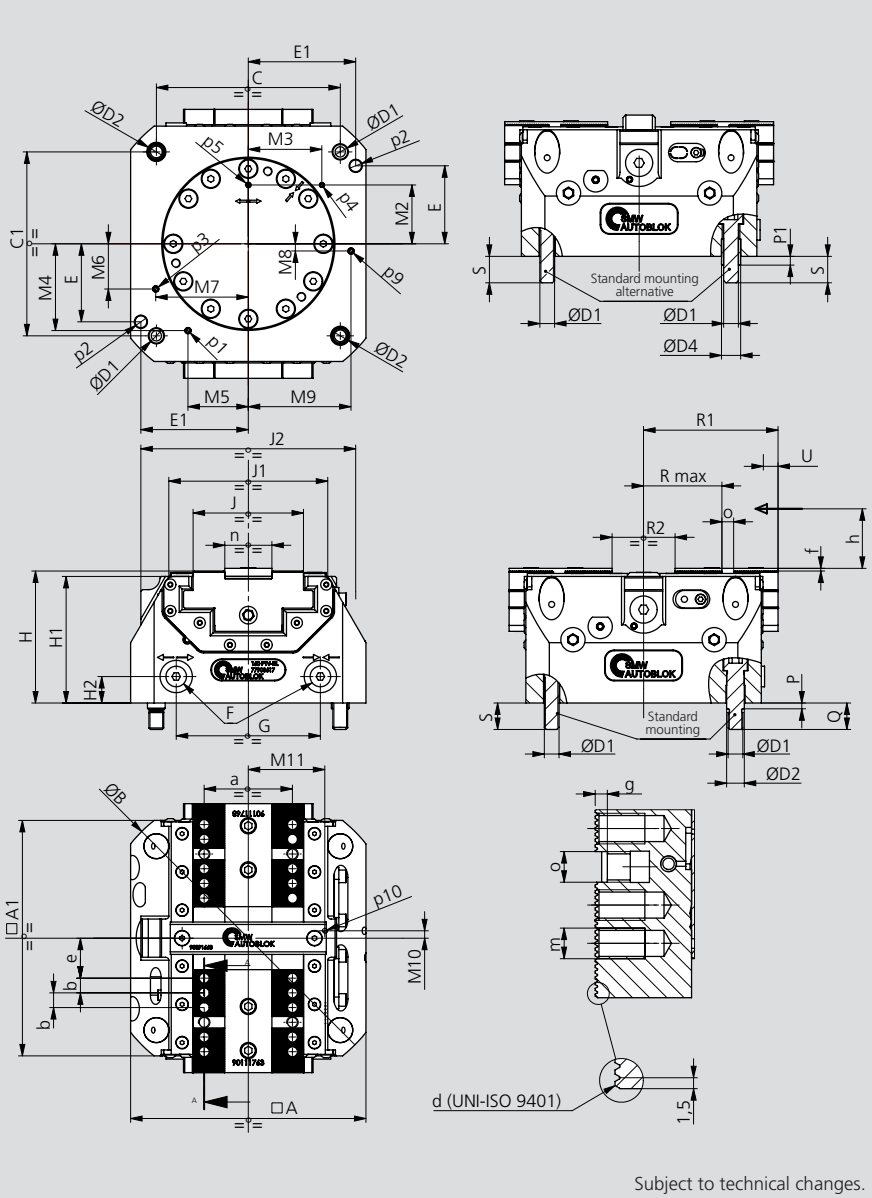

Subject to technical changes.

PTH-N/PTH-L/PTH-F

- Hydraulic version
- Pneumatic open / close control (stroke control) master jaws valve
- PTH-N: Normal stroke
- PTH-L: Long stroke
- PTH-F: One fixed Jaw

Protected hydraulic Twin Vise

Type	Id. No.	Stroke type	Stroke / jaw [mm]	Clamping force max. [kN]	Piston area [cm²]	Operating pressure max. [bar]	Repeatability [mm]	Weight [kg]
100 PTH-N	77905711	Normal	2.6	13	15	30	0.01	6
100 PTH-L	77905811	Long	6			60	0.01	
100 PTH-F	77905911	Fixed jaw	6			40	0.01	
125 PTH-N	77905712	Normal	2.6	17	20	30	0.01	8
125 PTH-L	77905812	Long	6			60	0.01	
125 PTH-F	77905912	Fixed jaw	6	15		35	0.01	
160 PTH-N	77905717	Normal	3	40	45	30	0.01	15
160 PTH-L	77905817	Long	8.4	38		60	0.01	
160 PTH-F	77905917	Fixed jaw	8.4	32		25	0.01	
200 PTH-N	77905721	Normal	4.2	60	68	25	0.02	25
200 PTH-L	77905821	Long	10.2	52		45	0.02	
200 PTH-F	77905921	Fixed jaw	10.2	44		20	0.02	
250 PTH-L	77905826	Long	15	60	113	45	0.02	35

SMW-AUTOBLOK Type PTH			100	125	160	200	250
	A	mm	100	125	160	200	210
	A1	mm	110	125	160	200	238
	B(Ø)	mm	136	162	205	255	300
	C	mm	80	100	125	160	180
	C1	mm	80	100	125	160	200
	D1(Ø)	mm	M8	M8	M10	M12	M12
	D2 (Øf7)	mm	10	10	12	14	14
	D4 (Øjs7)	mm	11	11	13	16	16
	E	mm	32	/	53	73	80
	E1	mm	45	/	73	92	90
	F	mm	G1/8"	G1/8"	G1/8"	G1/8"	G1/8"
	G	mm	56	57	98	128	90
	H	mm	75.5	80.5	89.7	97	105
	H1	mm	72	77	86	93	100
	H2	mm	15	17	18	18	20
	J	mm	47	47	75	94	125
	J1	mm	82	100	108	144	180
	J2	mm	100	121	146	166	-
	M2	mm	32	32	40	50	80
	M3	mm	29.5	29.5	50	65	45
	M4	mm	34.2	40.5	59	72.8	89.8
	M5	mm	27.7	38.5	41	52.9	65.2
	M6	mm	14,2	10,6	30,7	39,5	0
	M7	mm	41,1	54,5	62,9	80,9	92
	M8	mm	8.3	4.8	4.9	9.4	6.7
	M9	mm	42.7	55.3	69.8	89.5	76.7
	M10	mm	5	5	5	8	9
	M11	mm	34	34	52	60	78
	P	mm	4	4	4	5	5
	P1	mm	4	4	6	6	6
	Q	mm	15	15	18	20	20
Min. / max. (long stroke)	**R max**	mm	25.6 / 31.6	25.6 / 31.6	44.8 / 53.2	54.5 / 64.7	51.5 / 66.5
Min. / max. (normal stroke)	**R max**	mm	25.4 / 28	25.4 / 28	45 / 48	54.5 / 58.7	-
Min. / max. (fixed jaw)	**R max**	mm	25.6 / 31.6	25.6 / 31.6	44.8 / 53.2	54.5 / 64.7	-
Min. / max. (long stroke)	**R1**	mm	57.5 / 63.5	64,5 / 70,5	82.5 / 90.9	102.5 / 112.7	119.5 / 134.5
Min. / max. (normal stroke)	**R1**	mm	57.4 / 60	64.4 / 67	82.5 / 85.5	102.8 / 107	-
Min. / max. (fixed jaw)	**R1**	mm	57.5 / 63.5	64.5 / 70,5	82.5 / 90.9	102.5 / 112.7	-
Min. / max. (long stroke)	**R2**	mm	20 / 32	20 / 32	26 / 42.8	30 / 50.4	39 / 69
Min. / max. (normal stroke)	**R2**	mm	19.8 / 25	19.8 / 25	26 / 32	30.6 / 39	-
Min. / max. (fixed jaw)	**R2**	mm	20 / 26	20 / 26	26 / 34.4	30 / 40.2	-
	S	mm	15	15	18	20	20
Long stroke	**U**	mm	6	6	8.4	10.2	15
Normal stroke	**U**	mm	2.6	2.6	3	4.2	-
Fixed jaw	**U**	mm	6	6	8.4	10.2	-
	a	mm	35	35	60	80	90
	b	mm	7	7	10	10	12
Serration	**d**	mm	1.5 x 60°	1.5 x 60°	1.5 x 60°	1.5 x 60°	1.5 x 60°
Min. / max. (long stroke)	**e**	mm	14.6 / 20.6	14.6 / 20.6	18.8 / 27.2	28.5 / 38.7	32.5 / 47.5
Min. / max. (normal stroke)	**e**	mm	14.4 / 17	14.4 / 17	19 / 22	28.5 / 32.7	-
Min. / max. (fixed jaw)	**e**	mm	14.6 / 20.6	14.6 / 20.6	18.8 / 27.2	28.5 / 38.7	-
	f	mm	1.8	1.8	1.8	2	2,5
	g	mm	2.7	2.7	3.2	4	4
	h	mm	16	16	25	35	40
	m	mm	M6x10	M6x10	M8x12	M8x12	M10x15
	n (g6)	mm	20	20	32	40	50
	o (H7)	mm	6	6	8	8	10
Lubrication fitting	**p1**	mm	M4	M4	M5	M5	M5
	p2 (øH7)	mm	/	/	8x14	8x14	10x20
Pneumatic open / close - stroke control master jaws or air purge	**p3**	mm	M4	M4	M5	M5	M5
Vise closed	**p4**	mm	M4	M4	M4	M4	M5
Vise open	**p5**	mm	M4	M4	M4	M4	M5
Air sensing connection	**p9**	mm	M4	M4	M5	M5	M5
Air sensing outlet (under front plate)	**p10**	mm	M4	M4	M4	M4	M5

PTP / PTH

Protected pneumatic and hydraulic Twin Vises

■ Mounting instructions

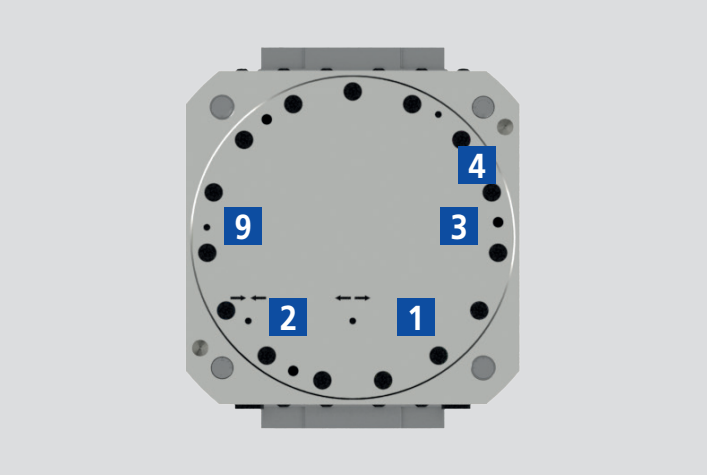

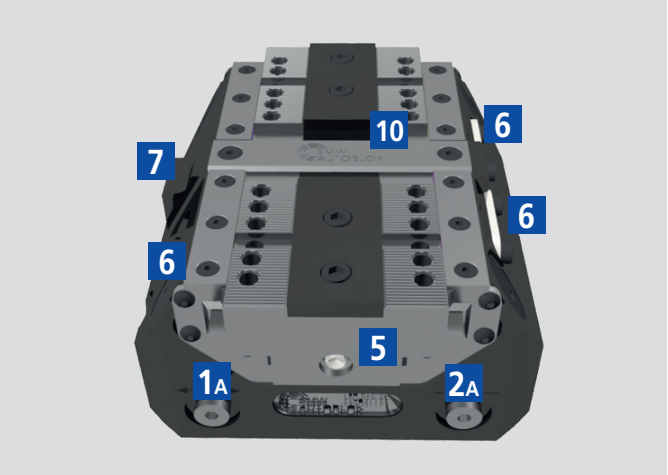

Solution 1 standard

± 0,03 mm to clamping center

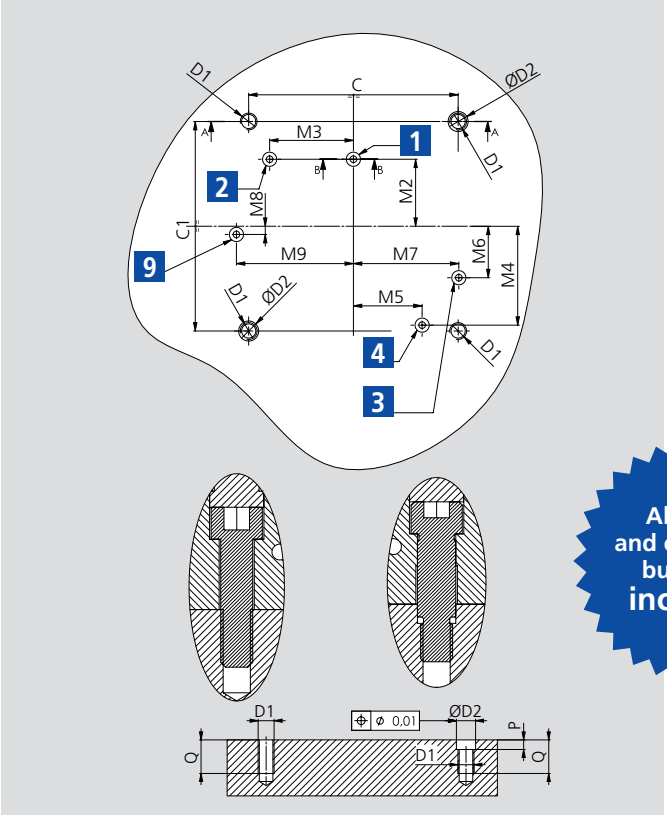

Solution 2 standard

± 0,025 mm to clamping center

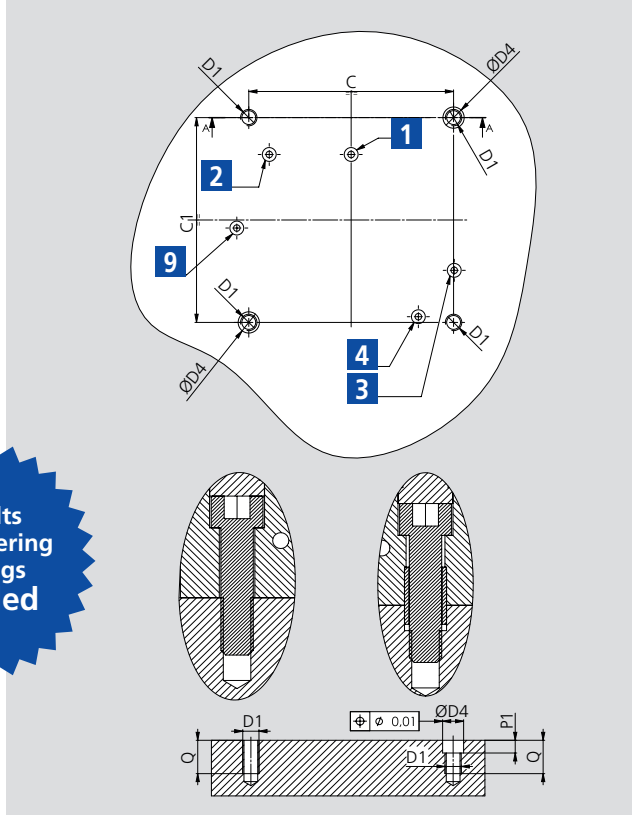

All bolts and centering bushings included

Feeding seats: Obligated execution

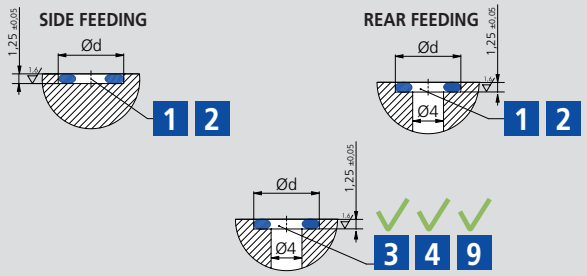

1	Open-Rear feeding	2	Closed-Rear feeding	3	Pneumatic open / close stroke control or air purge connection*
1A	Open-Side feeding	2A	Closed-Side feeding	4	Central lubrication
5	Lubrication fitting	6	Proximity switch seats	7	Pneumatic open/close -stroke control-m.j.valve (optional)
9	Air sensing connection (only bottom)	10	Air sensing outlet (under front plate)		

*The air purge can be used only without the valve.

PT	C	C1	D1	D2H7	D4H7	M2	M3	M4	M5	M6	M7	M8	M9	P	P1	Q	Ød	OR
100	80	80	M8	10	11	32	29.5	34.2	27.7	14.2	41.1	7	43	6	6	18	8	OR2018
125	100	100	M8	10	11	32	29.5	40.5	38.5	9.6	54.6	4.8	55.3	6	6	18	8	OR2018
160	125	125	M10	12	13	40	50	59	41	30.7	62.9	4.9	69.8	6	7	21	8	OR2018
200	160	160	M12	14	16	50	65	72.8	52.9	39.5	80.9	9.4	89.5	7	7	24	8.8	OR2021
250	180	200	M12	14	16	80	45	89.8	65.2	0	92	6.7	76.7	7	7	24	8.8	OR2021

Notes

STV-2N / STV-2L

Spring and air operated Twin Vise

- Protected and springs clamping
- Pneumatic open / close control (stroke control) master jaws valve
- 2 jaws
- STV-2N: Normal stroke
- STV-2L: Long stroke

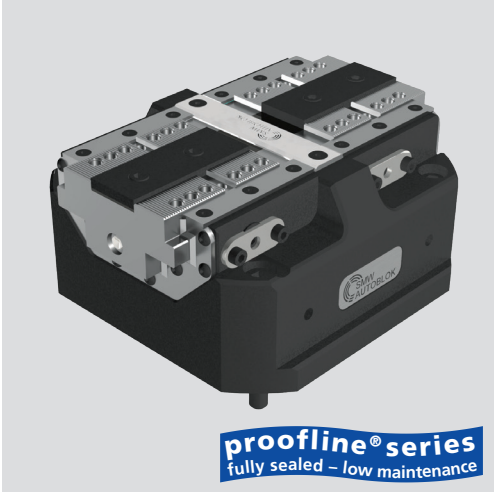

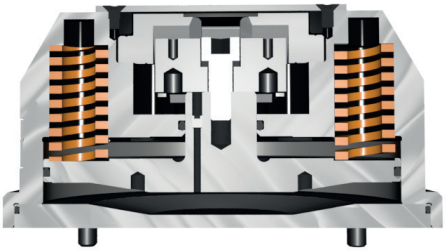

Application/customer benefits

- Protected against contamination of swarf and chips, fully sealed (proofline)
- Compact design
- Linear pressure adjustment
- Highest repeatability
- Highest rigidity

Technical features

- Spring to clamp, pneumatic open
- **proofline®** = fully sealed - low maintenance 1
- Increase of the clamping force via Turbo function
- Housing and functional parts hardened for high precision and long life
- Ready for air purge
- Master jaws with both tongue & groove and fine serration 1.5 mm x 60°
- OD clamping only
- Safety valve SAB-1 2 to maintain air pressure during pallet transportation / storage and machining without feed (optional)
- Pneumatic open / close control (stroke control) master jaws valve (optional)
- Lubrication with SMW-AUTOBLOK K67 grease
- Stroke control via proximity switches (optional)
- Air sensing

Standard equipment

Self-centering vise without top jaws
All bolts and centering bushings included

ROTATION USE
The vise can be used up to maximum 500 r.p.m. only if operated with springs + Turbo system (at minimum 3 bar) and with top jaws weight not higher than the standard ones.

Gripping force diagrams

STV-2N	125	180	225
STV-2L	125	180	225

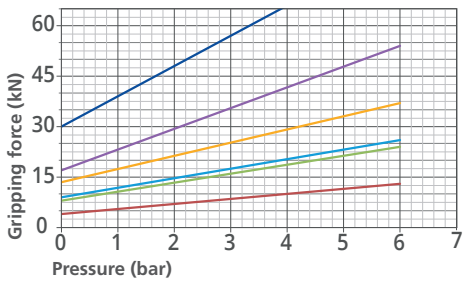

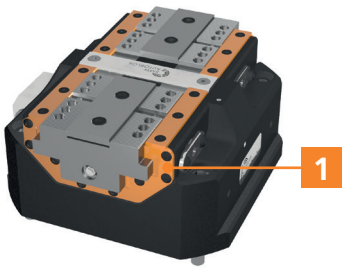

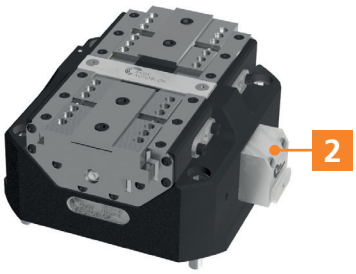

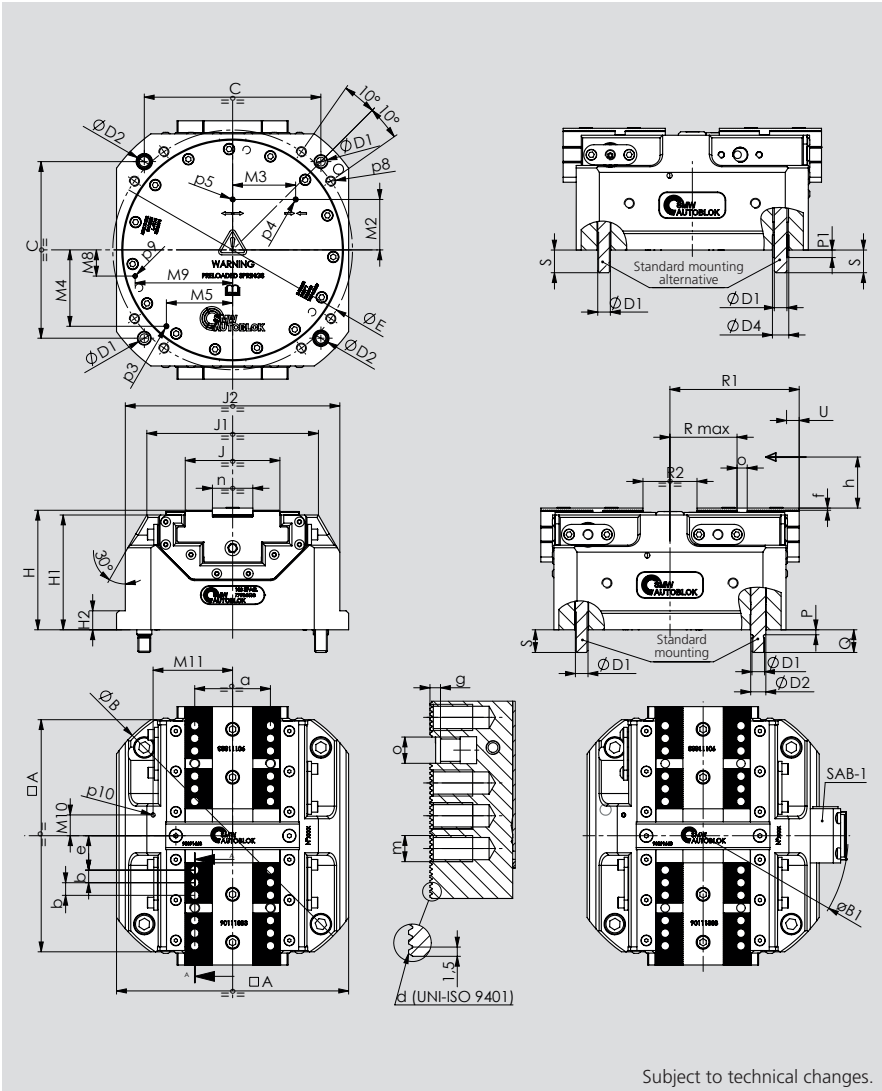

Subject to technical changes.

STV-2N / STV-2L

- Protected and springs clamping
- Pneumatic open / close control (stroke control) master jaws valve
- 2 jaws
- STV-2N: Normal stroke
- STV-2L: Long stroke

Spring and air operated spring vise

Type	Id. No.	Type stroke	Max. Clamping force middle stroke [kN]		Piston area [cm²]	Re-opening pressure [bar]	Operating pressure max. [bar]	Min. / max. Operating pressure [bar]	Repeat-ability [mm]	Weight [kg]
			Only springs	Springs + Turbo						
125 STV-2N	77904312	Normal	9	26	78	5	6	-	0.01 mm	7
125 STV-2L	77904412	Long	4	13						
180 STV-2N	77904318	Normal	17	54	170	5	6	-	0.01 mm	17.5
180 STV-2L	77904418	Long	8	24						
225 STV-2N	77904322	Normal	30	66	250	6	4	-	0.02 mm	28
225 STV-2L	77904422	Long	13.5	37			6	-		
125 STV-2N + SAB-1	77904812*	Normal	-	-	-	-	-	3.5 / 6	-	-
125 STV-2L + SAB-1	77904912*	Long	-	-	-	-	-	3.5 / 6	-	-
180 STV-2N + SAB-1	77904818*	Normal	-	-	-	-	-	3.5 / 6	-	-
180 STV-2L + SAB-1	77904918*	Long	-	-	-	-	-	3.5 / 6	-	-
225 STV-2N + SAB-1	77904822*	Normal	-	-	-	-	-	3.5 / 4	-	-
225 STV-2L + SAB-1	77904922*	Long	-	-	-	-	-	3.5 / 6	-	-

* Id. No. Twin Vise included the SAB-1. For example, 77904812 is composed by 125STV-2N Id. No. 77904312 plus SAB-1 Id. No. 27581810

SMW-AUTOBLOK Type STV-2			125	180	225
	A	mm	125	184	225
	B (Ø)	mm	162	225	284
SAB-1 valve overall dimensions	**B1 (Ø)**	mm	186	230	276
	C	mm	100	140	180
	D1(Ø)	mm	M8	M10	M12
	D2 (Øf7)	mm	10	12	14
	D4 (Øjs7)	mm	11	13	16
	E (ø)	mm	136	190	240
	H	mm	80.5	94.7	102
	H1	mm	77	91	98
	H2	mm		15	15
	J	mm	47	75	94
	J1	mm	100	136	172
	J2	mm	125	170	216
	M2	mm	32	40	50
	M3	mm	29.5	50	65
	M4	mm	40.5	60.5	79
	M5	mm	38.5	52.5	63
	M8	mm	10.6	20.7	15
	M9	mm	54.5	77.3	99.9
	M10	mm	10.5	16.5	15
	M11	mm	46	63	81
	P	mm	4	4	5
	P1	mm	4	6	6
	Q	mm	15	18	20
Min. / max. (long stroke)	**R max**	mm	25.6 / 31.6	44.8 / 53.2	54.5 / 64.7
Min. / max. (normal stroke)	**R max**	mm	25.4 / 28	45 / 48	54.5 / 58.7
Min. / max. (long stroke)	**R1**	mm	64.5 / 70.5	94 / 102.4	114.5 / 124.7
Min. / max. (normal stroke)	**R1**	mm	64.4 / 67	94.5 / 97.5	114.8 / 119
Min. / max. (long stroke)	**R2**	mm	20 / 32	26 / 42.8	30 / 50.4
Min. / max. (normal stroke)	**R2**	mm	19.8 / 25	26 / 32	30.6 / 39
	S	mm	15	18	20
Long stroke	**U**	mm	6	8.4	10.2
Normal stroke	**U**	mm	2.6	3	4.2
	a	mm	35	60	80
	b	mm	7	10	10
Serration	**d**	mm	1.5 x 60°	1.5 x 60°	1.5 x 60°
Min. / max. (long stroke)	**e**	mm	14.6 / 20.6	18.8 / 27.2	28.5 / 38.7
Min. / max. (normal stroke)	**e**	mm	14.4 / 17	19 / 22	28.5 / 32.7
	f	mm	1.8	1.8	2
	g	mm	2.7	3.2	4
	h	mm	16	25	35
	m	mm	M6x10	M8x12	M8x12
	n (g6)	mm	20	32	40
	o (H7)	mm	6	8	8
Pneumatic open / close stroke control or air purge	**p3**	mm	M4	M4	M4
Vise closed	**p4**	mm	M4	M4	M4
Vise open	**p5**	mm	M4	M4	M4
	p8	mm	M6x12	M8x16	M10x18
	p9	mm	M4	M4	M4
	p10	mm	M4	M4	M4

STV-3N / STV-3L

Spring and air operated Twin Vise

- Protected and springs clamping
- Pneumatic open / close control (stroke control) master jaws valve
- 3 jaws
- STV-3N: Normal stroke
- STV-3L: Long stroke

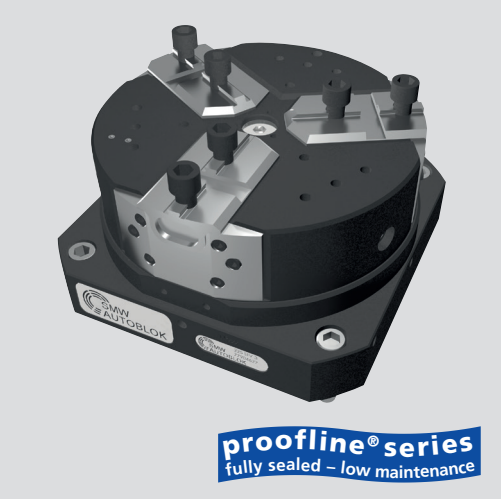

Application/customer benefits

- Compact design
- Master jaws guide protected against swarf and chips
- Highest repeatability
- Highest rigidity

Technical features

- Spring to clamp, pneumatic open
- **proofline®** = fully sealed - low maintenance 1
- Increase of the clamping force via Turbo function
- Housing and functional parts hardened for high precision and long life
- Ready for air purge
- 3 jaw interfaces: Tongue & groove
- OD clamping only
- Safety valve SAB-1 2 to maintain air pressure during pallet transportation / storage and machining without feed (optional)
- Pneumatic open / close control (stroke control) master jaws valve (optional)
- Lubrication with SMW-AUTOBLOK K67 grease

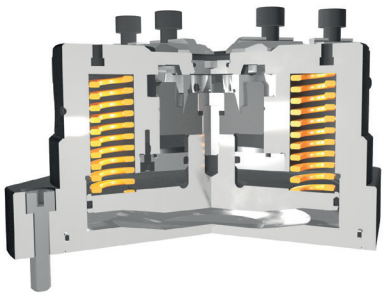

Standard equipment

Self-centering vise without top jaws
All bolts and centering bushings included

ROTATION USE
The vise can be used up to max 1000 rpm (standard stroke version) and max 800 rpm (long stroke version) only if operated with springs + Turbo system (at minimum 3 bar) and with top jaws weight not higher than the standard ones.

Gripping force diagrams

STV-3N 180 225
STV-3L 225

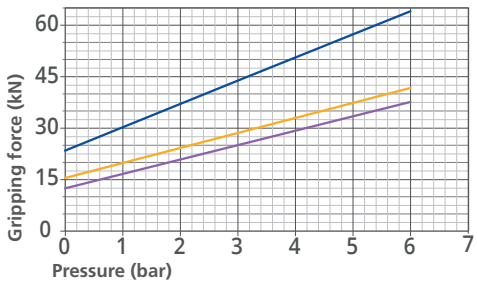

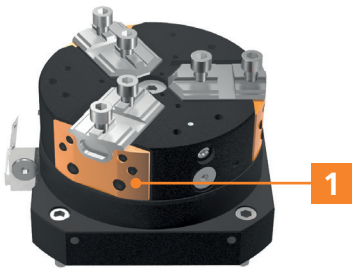

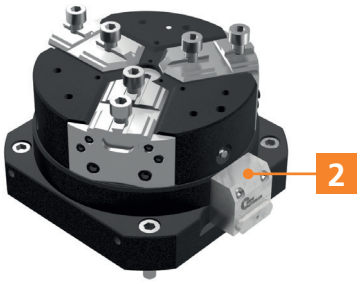

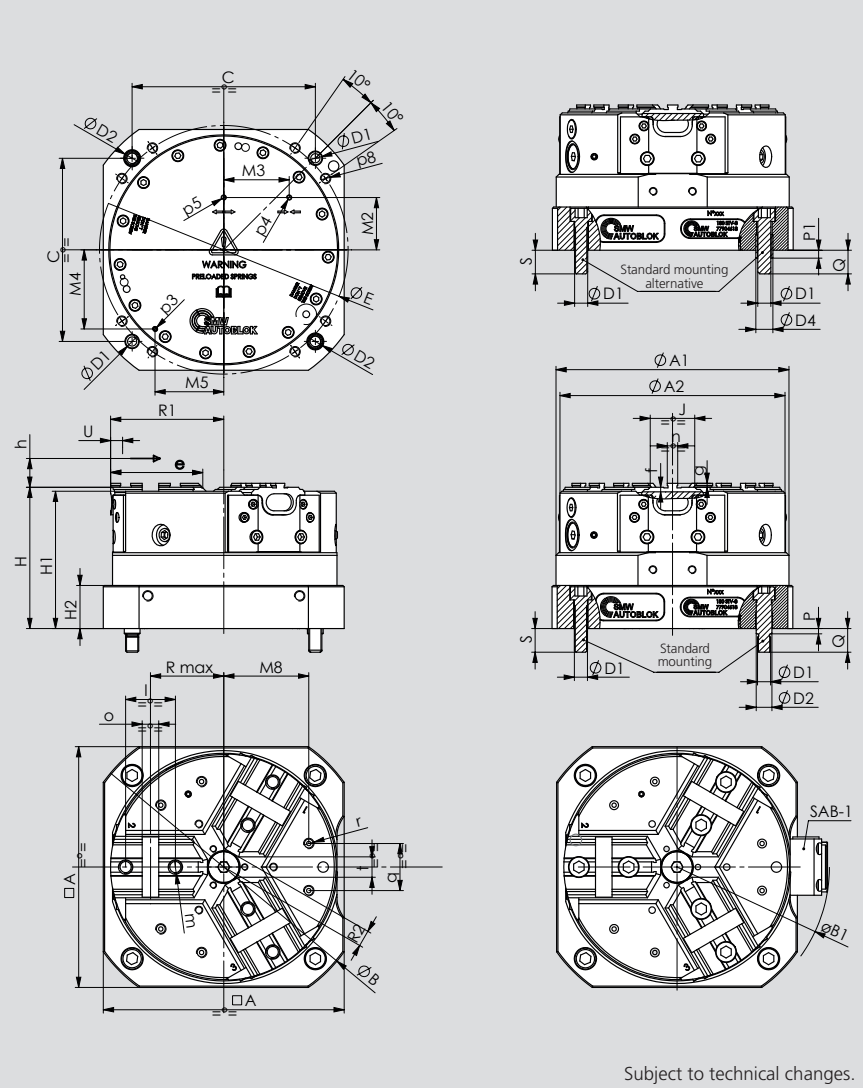

Subject to technical changes.

STV-3N / STV-3L

- Protected and springs clamping
- Pneumatic open / close control (stroke control) master jaws valve
- 3 jaws
- STV-3N: Normal stroke
- STV-3L: Long stroke

Spring and air operated Twin Vise

Type	Id. No.	Stroke type	Max. clamping force middle stroke [kN]		Stroke / jaw [mm]	Piston area [cm²]	Re-opening pressure [bar]	Max. operating pressure [bar]	Min. / max. operating pressure [bar]	Weight [kg]
			Only springs	Springs + Turbo						
180 STV-3N	77904618	Normal	13	38	3.8	170	5	6	-	18
225 STV-3N	77904622	Normal	24	64	4.2	250	6	6	-	29.5
225 STV-3L	77904722	Long	16	42	8	250	6	6	-	29.5
180 STV-3N + SAB-1	77905018*	Normal	-	-	-	-	-	-	3.5 / 6	-
225 STV-3N + SAB-1	77905022*	Normal	-	-	-	-	-	-	3.5 / 6	-
225 STV-3L + SAB-1	77905122*	Long	-	-	-	-	-	-	3.5 / 6	-

* Id. No. Twin Vise included the SAB-1. For example, 77905018 is composed by 180STV-3N Id. No. 77904618 plus SAB-1 Id. No. 27581810

SMW-AUTOBLOK Type STV-3			180	225
	A	mm	184	225
	A1	mm	178	222
	A2	mm	172	216
	B (Ø)	mm	225	284
SAB-1 valve overall dimension	B1 (Ø)	mm	233	276
	C	mm	140	180
	D1(Ø)	mm	M10	M12
	D2 (Øf7)	mm	12	14
	D4 (Øjs7)	mm	13	16
	E (ø)	mm	190	240
	H	mm	108	115
	H1	mm	105	112
	H2	mm	33	38
	J	mm	34	46
	M2	mm	40	50
	M3	mm	50	65
	M4	mm	60.5	79
	M5	mm	52.5	63
	M8	mm	65	80
	P	mm	4	5
	P1	mm	6	6
	Q	mm	18	20
Min. / max. (normal stroke)	R max	mm	52.2 / 56	67.8 / 72
Min. / max. (normal stroke)	R1	mm	82.7 / 86.5	103.8 / 108
Min. / max. (normal stroke)	R2	mm	8.7 / 12.5	12.8 / 17
Min. / max. (long stroke)	R max	mm	/	68 / 76
Min. / max. (long stroke)	R1	mm	/	104.5 / 112.5
Min. / max. (long stroke)	R2	mm	/	9 / 17
	S	mm	18	20
Normal stroke	U	mm	3,8	4.2
Long stroke	U	mm	/	8
	e	mm	70	87
	f	mm	3.5	3.5
	g	mm	3	3
	h	mm	25	35
	l	mm	38	44.4
	m	mm	M10x12	M12x14
	n (h8)	mm	7.94	7.94
	o (H7)	mm	12.68	12.68
Pneumatic open / close stroke control or air purge	p3	mm	M4	M4
Vise closed	p4	mm	M4	M4
Vise open	p5	mm	M4	M4
	p8	mm	M8x16	M10x18
	q	mm	36	45
	r	mm	M8x10	M8x10
Min. / max. (normal stroke)	t	mm	9 / 15.6	13.5 / 20.9
Min. / max. (long stroke)	t	mm	/	6.8 / 20.9

STV

Spring and air operated Twin Vise

■ Mounting instructions

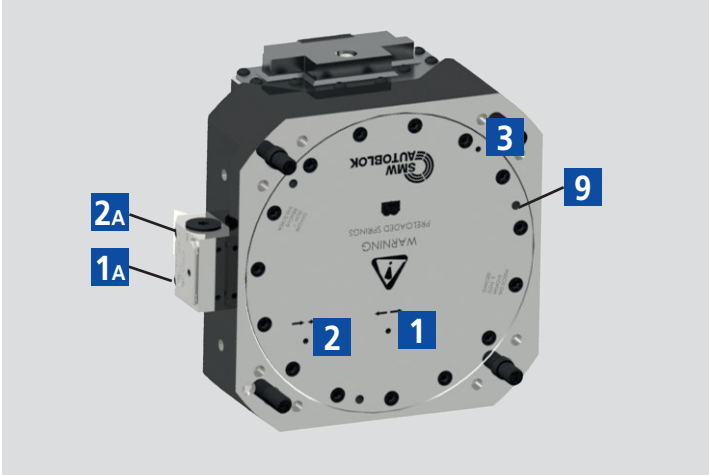

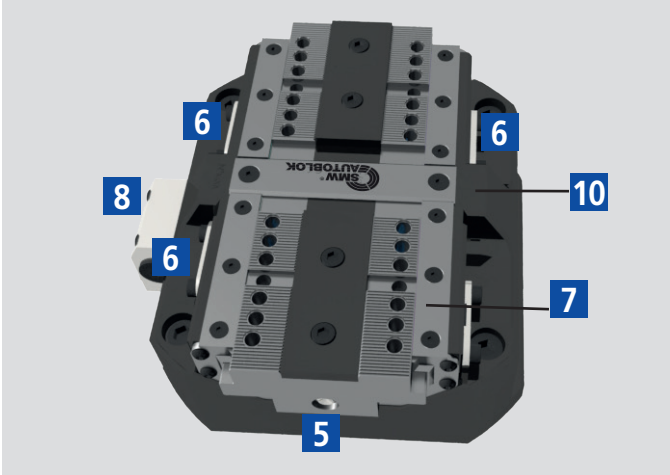

Solution 1 standard

± 0,03 mm to clamping center

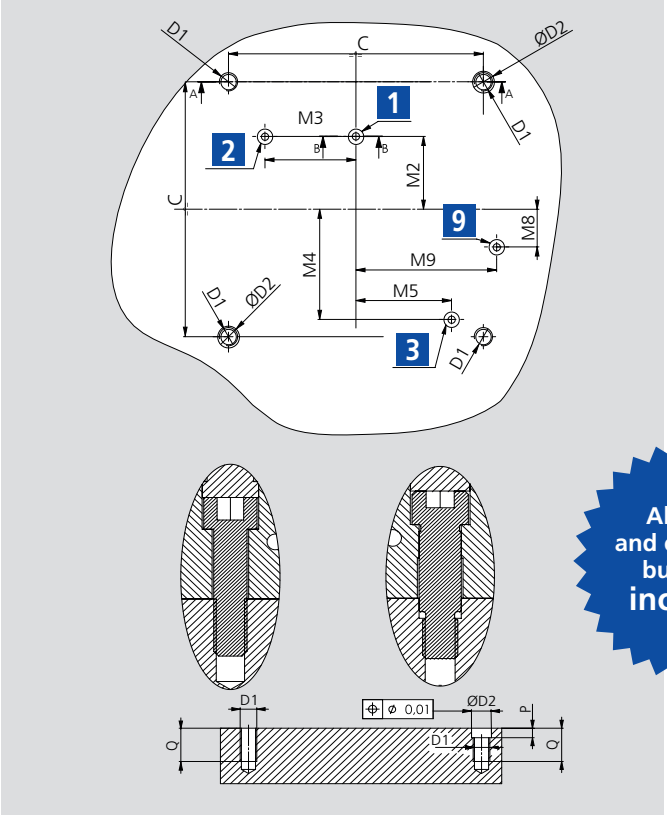

Solution 2 standard

± 0,025 mm to clamping center

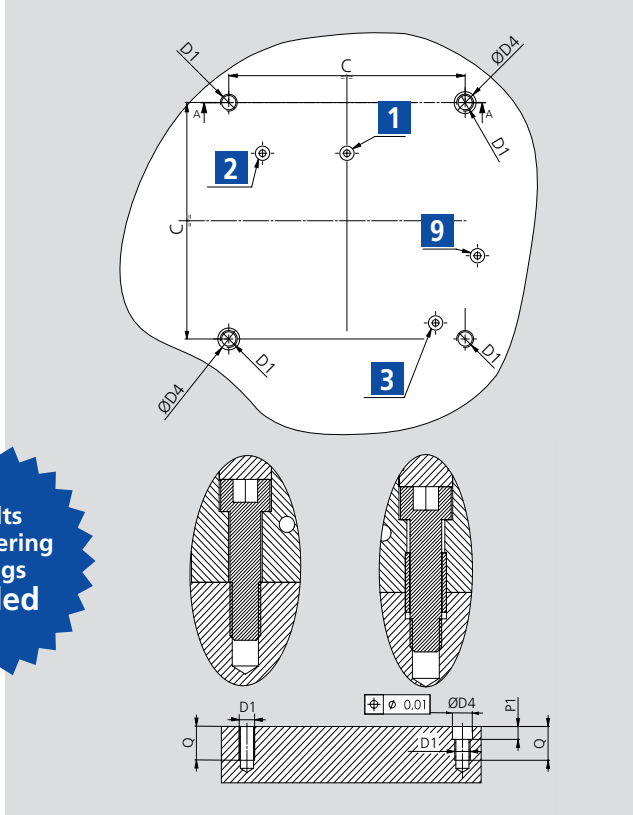

All bolts and centering bushings included

FEEDING SEATS: OBLIGATED EXECUTION

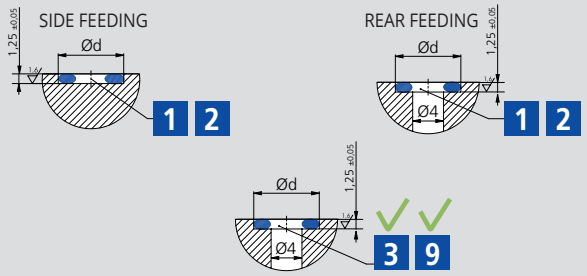

1	Open-Rear feeding	**2**	Closed-Rear feeding	**3**	Pneum.open close stroke control or Air purge*
1A	Open-Side feeding	**2A**	Closed-Side feeding	**5**	Lubrication fitting
6	Proximity switches seats	**7**	Pneumatic open / close stroke control valve (optional)	**8**	Safety valve SAB-1 (optional)
9	Air sensing connection** (only bottom)	**10**	Air sensing outlet** (under front plate)		

* The air purge can be used only without the valve.
** Points 9 and 10 only available on STV-2.

STV	C	D1	D2H7	D4H7	M2	M3	M4	M5	M8	M9	P	P1	Q	Ød	OR
125	100	M8	10	11	32	29.5	40.5	38.5	10.6	54.5	6	6	18	8	OR2018
180	140	M10	12	13	40	50	60.5	52.5	20.7	77.3	6	7	21	8.8	OR2021
225	180	M12	14	16	50	65	79	63	15	99.9	7	7	24	8.8	OR2021

Notes

TVP-N/TVP-L/TVP-F

Pneumatic Twin Vise

- TVP-N: Normal stroke
- TVP-L: Long stroke
- TVP-F: One fixed jaw

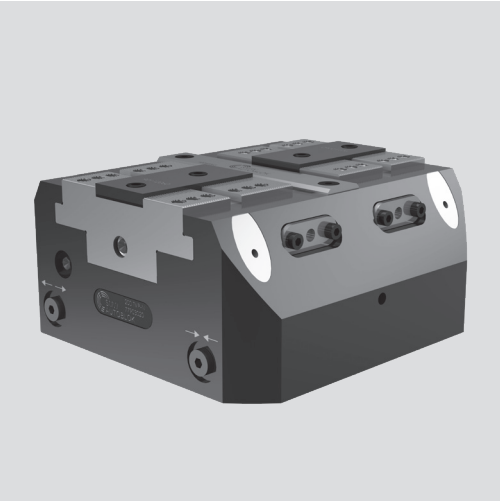

Application/customer benefits

- Compact design
- Linear pressure adjustment
- Highest repeatability
- Highest rigidity

Technical features

- H7 quality pilot bore
- Housing and functional parts hardened for high precision and long life
- Ready for air purge
- Ready for central grease lubrication
- Master jaws with both tongue & groove and fine serration 1.5 mm x 60°
- OD and ID clamping
- Lubrication with SMW-AUTOBLOK K67 grease
- Stroke control via proximity switches (optional)

Standard equipment

Self-centering vise without top jaws
All bolts and centering bushings included

Gripping force diagrams

TVP-N 100 160 200 250 315

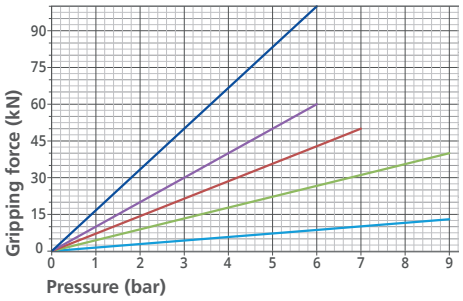

TVP-L 100 160 200 250 315

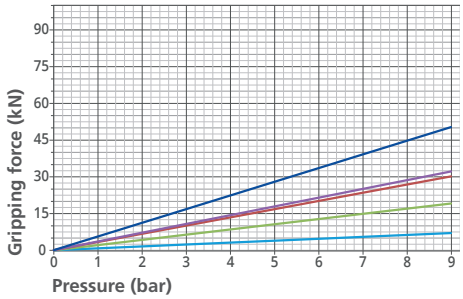

TVP-F 100 160 200 250 315

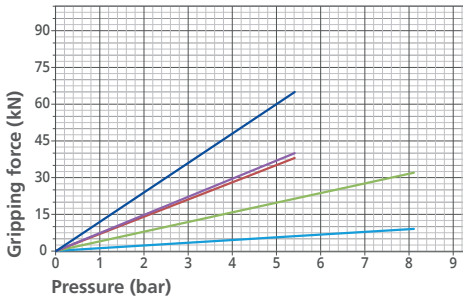

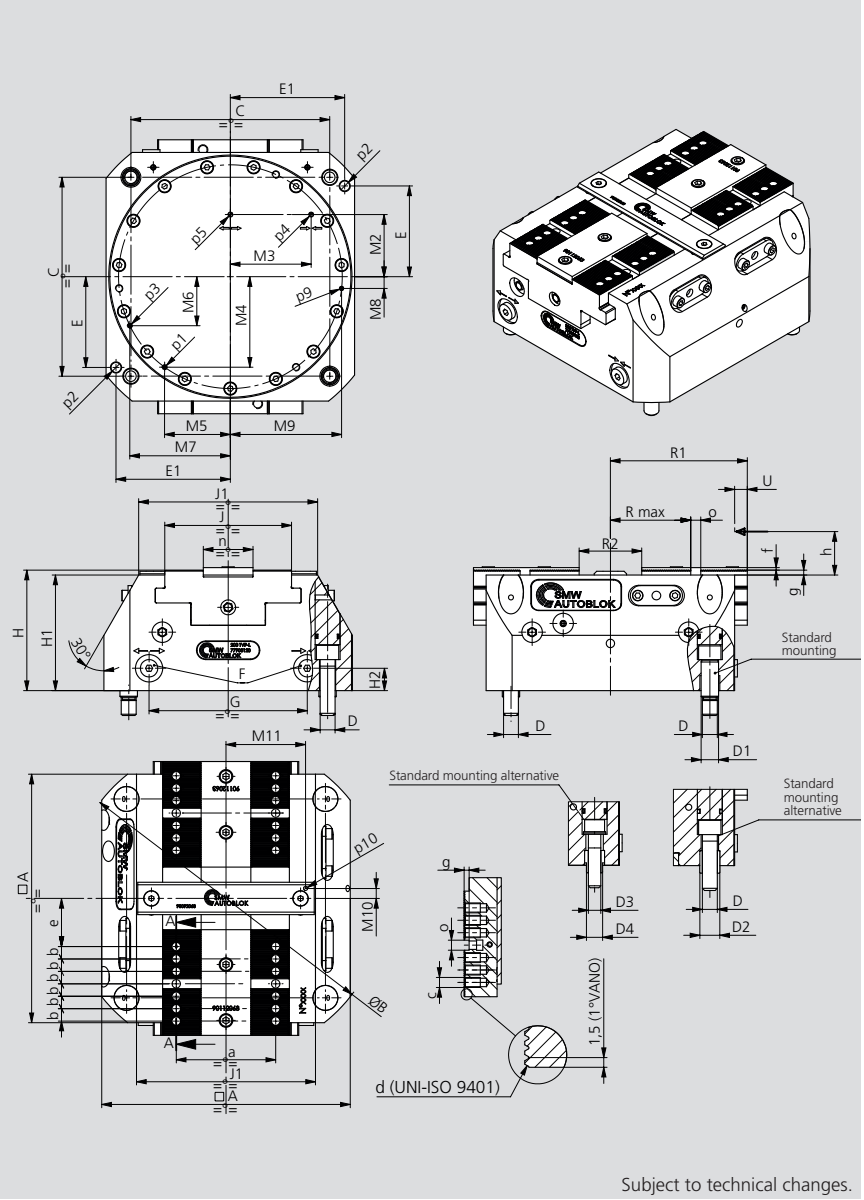

Subject to technical changes.

TVP-N/TVP-L/TVP-F

- TVP-N: Normal stroke
- TVP-L: Long stroke
- TVP-F: One fixed jaw

Pneumatic Twin Vise

Type	Id. No.	Stroke type	Max. clamping force [kN]	Stroke / jaw [mm]	Operating pressure [bar]	Repeatability [mm]	Weight [kg]
100 TVP-N	77903010	Normal	13	2.6	9	0.01	4.3
100 TVP-L	77903110	Long	7	6	9	0.01	4.3
100 TVP-F	77903210	Fixed jaw	9	6	9	0.01	4.3
160 TVP-N	77903016	Normal	40	3	9	0.01	13
160 TVP-L	77903116	Long	19	8.4	9	0.01	13
160 TVP-F	77903216	Fixed jaw	32	8.4	9	0.01	13
200 TVP-N	77903020	Normal	50	4.2	7	0.02	23
200 TVP-L	77903120	Long	30	10.2	9	0.02	23
200 TVP-F	77903220	Fixed jaw	38	10.2	6	0.02	23
250 TVP-N	77903025	Normal	60	5.3	6	0.02	39
250 TVP-L	77903125	Long	32	15	9	0.02	39
250 TVP-F	77903225	Fixed jaw	40	15	6	0.02	39
315 TVP-N	77903031	Normal	100	6.4	6	0.03	84
315 TVP-L	77903131	Long	50	18	9	0.03	84
315 TVP-F	77903231	Fixed jaw	65	18	6	0.03	84

SMW-AUTOBLOK Type TVP			100	160	200	250	315
	A	mm	100	160	200	250	315
	B(Ø)	mm	132	205	255	314	394
	C	mm	80	125	160	200	250
	D(Ø)	mm	M8x15	M10x18	M12x20	M12x20	M16x23
	D1 (Øf7)	mm	10x4	12x4	14x5	14x5	18x6
	D2 (Øjs7)	mm	11x4	13x6	16x6	16x6	21x6
	D3	mm	-	-	M10x18	-	-
	D4 (Øjs7)	mm	-	-	13x6	-	-
	E	mm	32	53	73	77	105
	E1	mm	45	73	92	115	140
	F	mm	M5	G1/8"	G1/8"	G1/8"	G1/8"
	G	mm	59.3	99	127.3	157	200.8
	H	mm	75.5	89.7	97	105	139
	H1	mm	72	86	93	100	133
	H2	mm	15	18	18	20	25
	J	mm	47	75	102	125	160
	J1	mm	72	108	144	180	230
	M2	mm	32	40	50	64	80
	M3	mm	29.5	50	65	75	90
	M4	mm	34.2	59	72,8	89.8	117.7
	M5	mm	27.7	41	52,9	65.2	79.4
	M6	mm	14.2	30.7	39,5	48.7	57.8
	M7	mm	41.1	62.9	80,9	99.8	129.7
	M8	mm	8.3	4.9	9.4	11.6	12.4
	M9	mm	42.7	69.8	89.5	110.4	141.5
	M10	mm	5	5	8	11	12
	M11	mm	34	52	64	78	102
Lubrication	**p1**	mm	M4	M4	M4	M5	M5
	p2 ØH7	mm	6x14	8x14	8x14	10x20	12x20
Air purge	**p3**	mm	M4	M4	M4	M5	M5
Vise closed	**p4**	mm	M4	M4	M4	M5	M5
Vise open	**p5**	mm	M4	M4	M4	M5	M5
Air sensing connection	**p9**	mm	M4	M4	M4	M5	M5
Air sensing outlet	**p10**	mm	M4	M4	M4	M6	M6
Min. / max. (long stroke)	**R2**	mm	20 / 32	26 / 42.8	30 / 50.4	39 / 69	50 / 86
Min. / max. (long stroke)	**R1**	mm	50 / 56	82.5 / 90.9	100 / 110.2	119.5 / 134.5	151.5 / 169.5
Min. / max. (long stroke)	**Rmax**	mm	25.6 / 31.6	44.8 / 53.2	54.5 / 64.7	51.5 / 66.5	81.5 / 99.5
Min. / max. (normal stroke)	**R2**	mm	19.8 / 25	26 / 32	30.6 / 39	34.4 / 45	49.2 / 62
Min. / max. (normal stroke)	**R1**	mm	47,4 / 50	82.5 / 85.5	95.8 / 100	119.7 / 125	151.1 / 157.5
Min. / max. (normal stroke)	**Rmax**	mm	25,4 / 28	45 / 48	54.5 / 58.7	55.7 / 61	87.1 / 93.5
Min. / max. (fixed jaw)	**R2**	mm	20 / 26	26 / 34.4	30 / 40.2	39 / 54	56 / 74
Min. / max. (fixed jaw)	**R1**	mm	50 / 56	82.5 / 90.9	100 / 110.2	119.5 / 134.5	151.5 / 169.5
Min. / max. (fixed jaw)	**Rmax**	mm	25.6 / 31.6	44.8 / 53.2	54.5 / 64.7	51.5 / 66.5	81.5 / 99.5
Long stroke	**U**	mm	6	8.4	10.2	15	18
Normal stroke	**U**	mm	2.6	3	4.2	5.3	6.4
Fixed jaw stroke	**U**	mm	6	8.4	10.2	15	18
	a	mm	35	60	80	90	120
	b	mm	7	10	10	12	15
	c	mm	M6x10	M8x12	M8x12	M10x15	M12x17
Serration	**d**	mm	1.5 x 60°	1.5 x 60°	1.5 x 60°	1.5 x 60°	1.5 x 60°
Min. / max. (normal stroke)	**e**	mm	14.4 / 17	19 / 22	28.5 / 32.7	24.7 / 30	33.1 / 39.5
Min. / max. (long stroke)	**e**	mm	14.6 / 20.6	18.8 / 27.2	28.5 / 38.7	32.5 / 47.5	42.5 / 60.5
Min. / max. (fixed jaw)	**e**	mm	14.6 / 20.6	18.8 / 27.2	28.5 / 38.7	32.5 / 47.5	42.5 / 60.5
	f	mm	1.8	1.8	2	2.5	2.5
	g	mm	2.7	3.2	4	4	4
	h	mm	16	25	35	40	40
	o (H7)	mm	6	8	8	10	12
	n (g6)	mm	20	32	40	50	60

TVH-N/TVH-L/TVH-F

Hydraulic Twin Vise

- TVH-N: Normal stroke
- TVH-L: Long stroke
- TVH-F: One fixed jaw

Application/customer benefits

- Compact design
- Linear pressure adjustment
- Highest repeatability
- Highest rigidity

Technical features

- H7 quality pilot bore
- Housing and functional parts hardened for high precision and long life
- Ready for air purge
- Ready for central grease lubrication
- Master jaws with both tongue & groove and fine serration 1.5 mm x 60°
- OD and ID clamping
- Lubrication with SMW-AUTOBLOK K67 grease
- Stroke control via proximity switches (optional)

Standard equipment

Self-centering vise without top jaws
All bolts and centering bushings included

Gripping force diagrams

TVH-N ■ 100 ■ 160 ■ 200

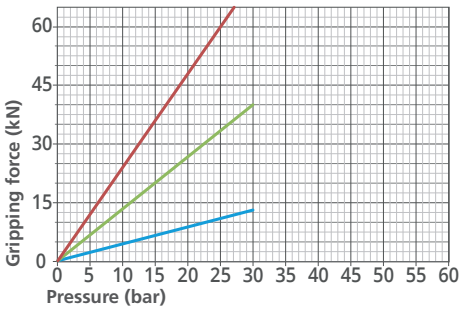

TVH-L ■ 100 ■ 160 ■ 200

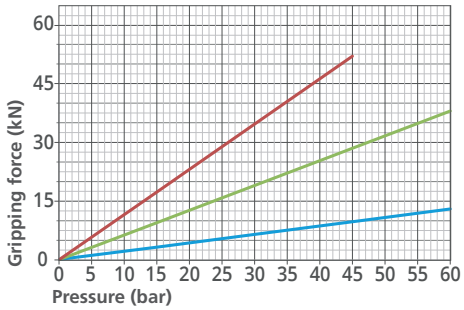

TVH-F ■ 100 ■ 160 ■ 200

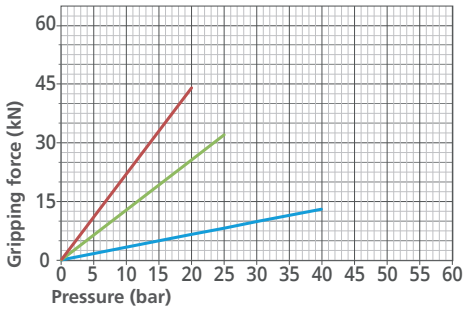

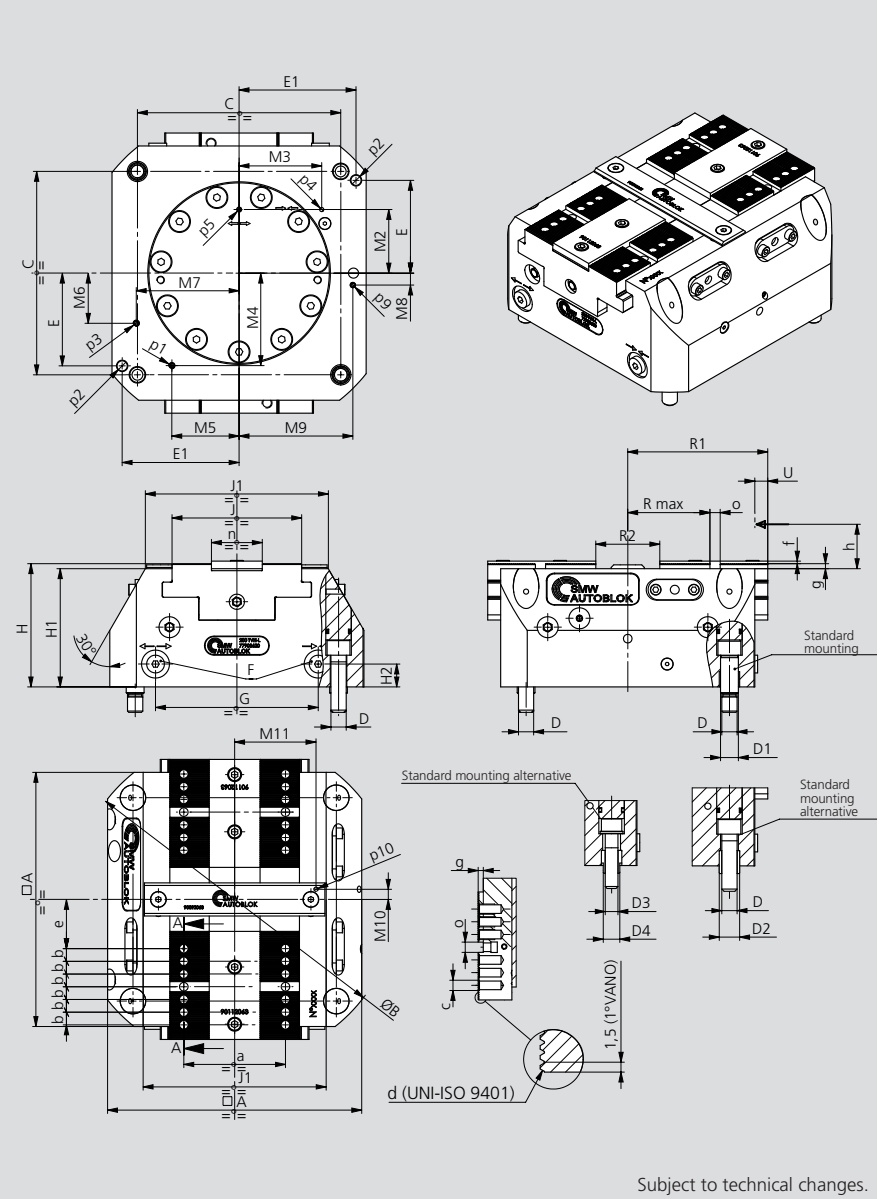

Subject to technical changes.

TVH-N/TVH-L/TVH-F

- TVH-N: Normal stroke
- TVH-L: Long stroke
- TVH-F: One fixed jaw

Hydraulic Twin Vise

Type	Id. No.	Stroke type	Max. clamping force [kN]	Stroke / jaw [mm]	Max. operating pressure [bar]	Repeatability [mm]	Weight [kg]
100 TVH-N	77903510	Normal	13	2.6	30	0.01	4.5
100 TVH-L	77903610	Long	13	6	60	0.01	4.5
100 TVH-F	77903710	Fixed jaw	13	6	40	0.01	4.5
160 TVH-N	77903516	Normal	40	3	30	0.01	14
160 TVH-L	77903616	Long	38	8.4	60	0.01	14
160 TVH-F	77903716	Fixed jaw	32	8.4	25	0.01	14
200 TVH-N	77903520	Normal	60	4.2	25	0.02	25
200 TVH-L	77903620	Long	52	10.2	45	0.02	25
200 TVH-F	77903720	Fixed jaw	44	10.2	20	0.02	25

SMW-AUTOBLOK Type TVH			100	160	200
	A	mm	100	160	200
	B(Ø)	mm	132	205	255
	C	mm	80	125	160
	D(Ø)	mm	M8x15	M10x18	M12x20
	D1 (Øf7)	mm	10x4	12x4	14x5
	D2 (Øjs7)	mm	11x4	13x6	16x6
	D3	mm	-	-	M10x18
	D4 (Øjs7)	mm	-	-	13x6
	E	mm	32	53	73
	E1	mm	45	73	92
	F	mm	G1/8"	G1/8"	G1/8"
	G	mm	55	98	128
	H	mm	75.5	89.7	97
	H1	mm	72	86	93
	H2	mm	15	18	18
	J	mm	47	75	102
	J1	mm	72	108	144
	M2	mm	32	40	50
	M3	mm	29.5	50	65
	M4	mm	34.2	59	72.8
	M5	mm	27.7	41	52.9
	M6	mm	14.2	30.7	39.5
	M7	mm	41.1	62.9	80.9
	M8	mm	8.3	4.9	9.4
	M9	mm	42.7	69.8	89.5
	M10	mm	5	5	8
	M11	mm	34	52	64
Lubrication	**p1**	mm	M4	M5	M5
	p2 ØH7	mm	6x14	8x14	8x14
Air purge	**p3**	mm	M4	M5	M5
Vise closed	**p4**	mm	M4	M4	M4
Vise open	**p5**	mm	M4	M4	M4
Air sensing connection	**p9**	mm	M4	M5	M5
Air sensing outlet	**p10**	mm	M4	M4	M4
Min. / max. (long stroke)	**R2**	mm	20 / 32	26 / 42.8	30 / 50.4
Min. / max. (long stroke)	**R1**	mm	50 / 56	82.5 / 90.9	100 / 110.2
Min. / max. (long stroke)	**Rmax**	mm	25.6 / 31.6	44.8 / 53.2	54.5 / 64.7
Min. / max. (normal stroke)	**R2**	mm	19.8 / 25	26 / 32	30.6 / 39
Min. / max. (normal stroke)	**R1**	mm	47.4 / 50	82.5 / 85.5	95.8 / 100
Min. / max. (normal stroke)	**Rmax**	mm	25.4 / 28	45 / 48	54.5 / 58.7
Min. / max. (fixed jaw)	**R2**	mm	20 / 26	26 / 34.4	30 / 40.2
Min. / max. (fixed jaw)	**R1**	mm	50 / 56	82.5 / 90.9	100 / 110.2
Min. / max. (fixed jaw)	**Rmax**	mm	25.6 / 31.6	44.8 / 53.2	54.5 / 64.7
Long stroke	**U**	mm	6	8.4	10.2
Normal stroke	**U**	mm	2.6	3	4.2
Fixed jaw stroke	**U**	mm	6	8.4	10.2
	a	mm	35	60	80
	b	mm	7	10	10
	c	mm	M6x10	M8x12	M8x12
Serration	**d**	mm	1.5 x 60°	1.5 x 60°	1.5 x 60°
Min. / max. (normal stroke)	**e**	mm	14.4 / 17	19 / 22	28.5 / 32.7
Min. / max. (long stroke)	**e**	mm	14.6 / 20.6	18.8 / 27.2	28.5 / 38.7
Min. / max. (fixed jaw)	**e**	mm	14.6 / 20.6	18.8 / 27.2	28.5 / 38.7
	f	mm	1.8	1.8	2
	g	mm	2.7	3.2	4
	h	mm	16	25	35
	o (H7)	mm	6	8	8
	n (g6)	mm	20	32	40

TVP / TVH

Standard Twin Vises

■ Mounting instructions

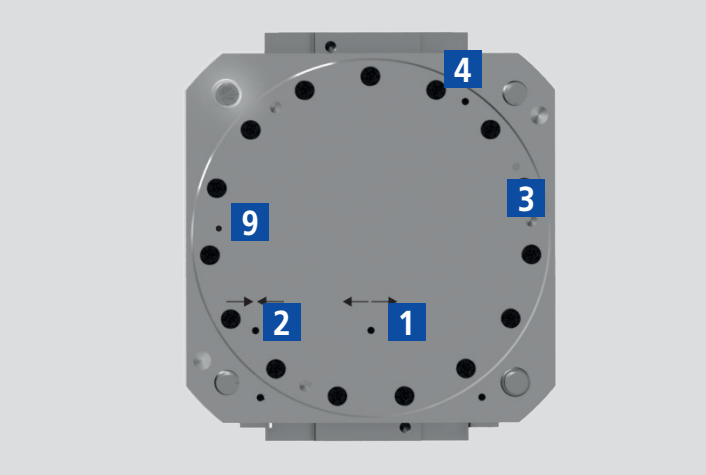

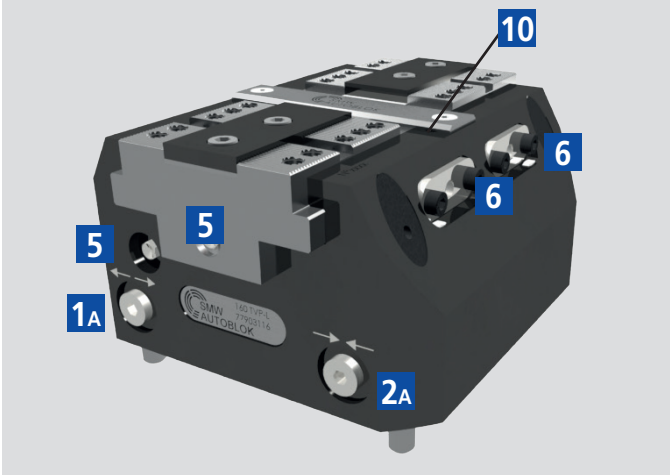

Solution 1 standard

± 0,03 mm to clamping center

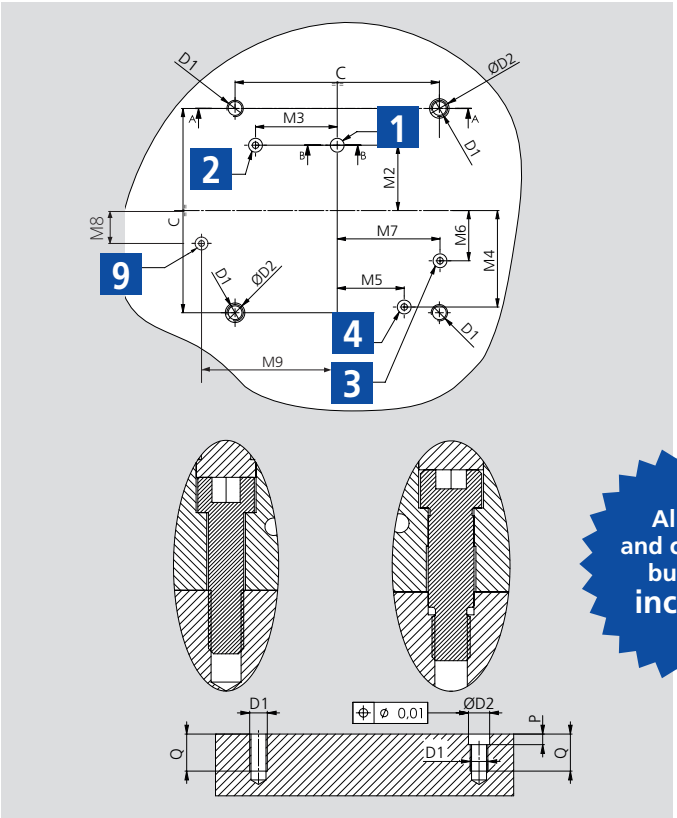

All bolts and centering bushings included

Solution 2 standard

± 0,025 mm to clamping center

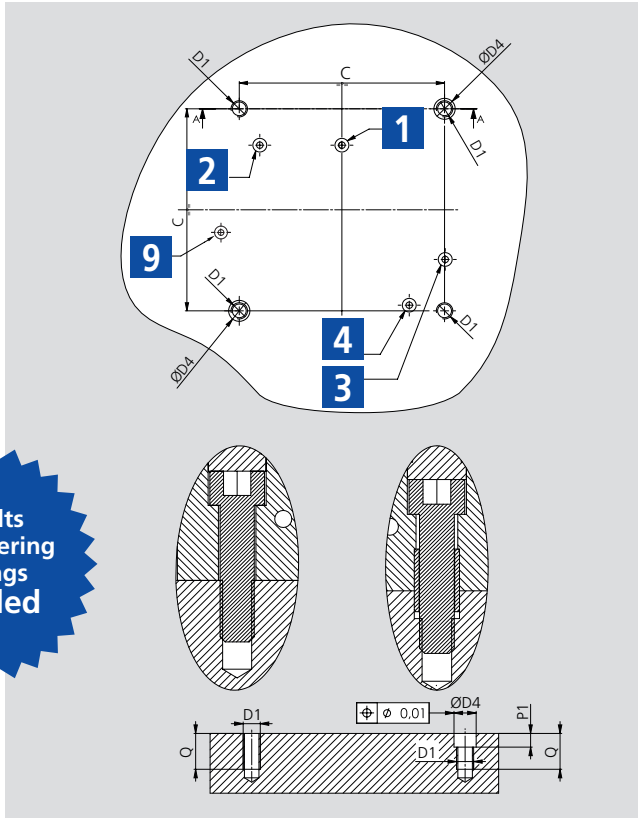

Feeding seats: Obligated execution

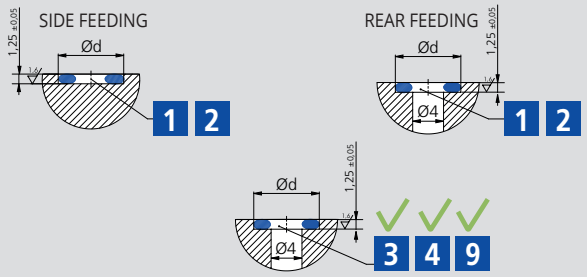

- **1** Open- Rear feeding
- **2** Closed- Rear feeding
- **3** Air purge
- **1A** Open- Side feeding
- **2A** Closed- Side feeding
- **4** Central lubrication
- **5** Lubrication fitting
- **6** Proximity switches seats
- **9** Air sensing connection
- **10** Air sensing outlet

TV	C	D1	D2H7	D4H7	M	M1	M2	M3	M4	M5	M6	M7	M8	M9	P	P1	Q	V	Z	Ød	OR
100	80	M8	10	11	45	29	32	29.5	34.2	27.7	14.2	41.1	8.3	42.7	6	6	18	37.3	96.5	8	OR2018
160	125	M10	12	13	69	48	40	50	59	41	30.7	62.9	4.9	69.8	6	7	21	50	155	8	OR2018
200	160	M12	14	16	88	62	50	65	72.8	52.9	39.5	80.9	9.4	89.5	7	7	24	62	195	8.8	OR2021
250	200	M12	14	16	113	77	64	75	89.8	65.2	48.6	99.8	11.6	110.4	7	7	24	80	239	8.8	OR2021
315	250	M15	18	21	-	-	80	90	115.7	84	62.7	128.5	12.4	141.5	8	7	27	-	-	8.8	OR2021

Notizen

Safety valve SAB-1 (OPTIONAL)

Industry 4.0 Product

1 Features

- Safety valve SAB-1 to maintain air pressure during pallet transportation/storage and machining without feed
- Easy and smart opening of the vise by air gun
- Turbo function to increase the clamping forces

Only for STV-2 STV-3

Pneumatic gun

with steel nozzle

2 Operation

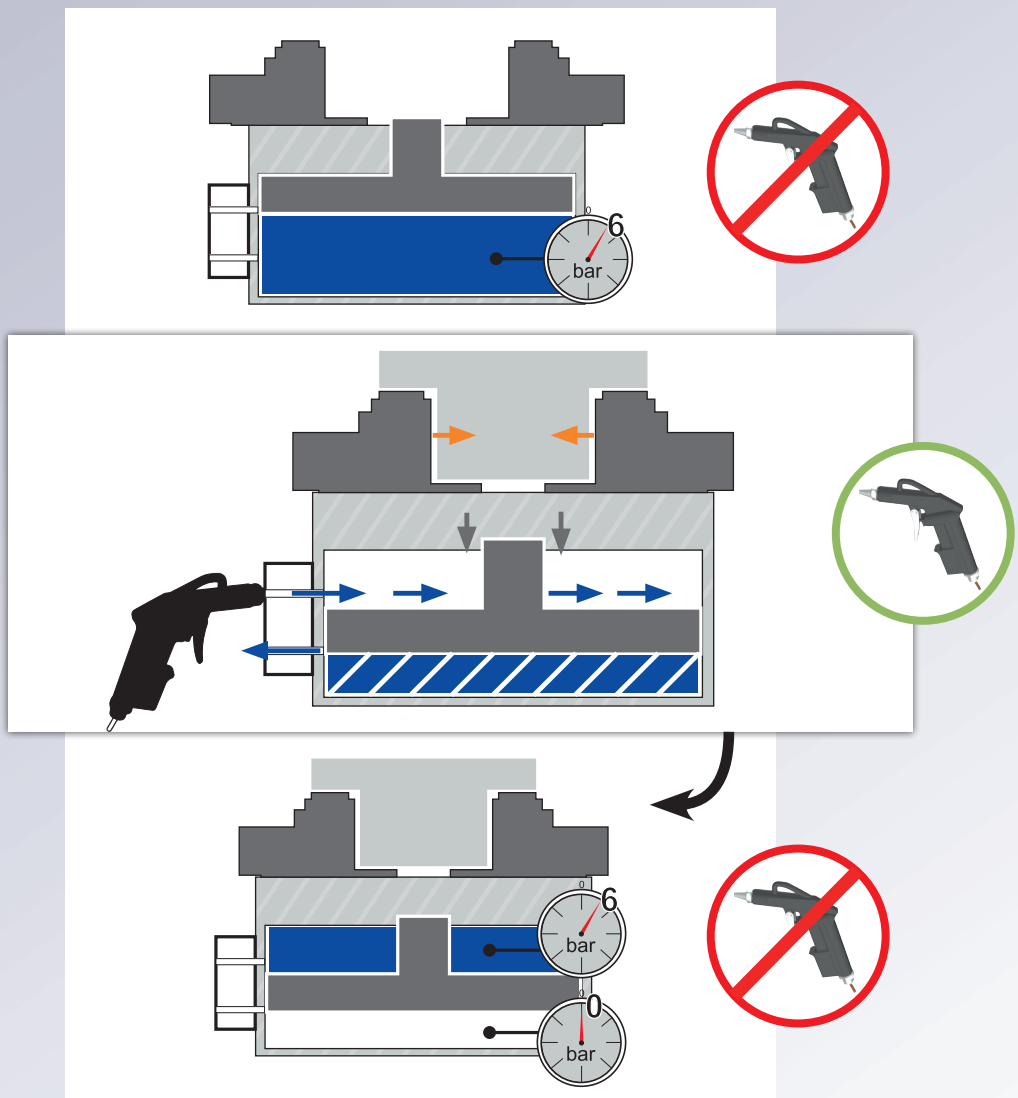

3 Mounting

In case of seperate purchase

▶ **3.1** Before installing the **SAB-1** please remember to remove the two set screws, because from factory default setting, the air connection is ready to be used from the bottom side.

▶ **3.2** After that you need close the two holes located on the bottom side using the same set screws or an o-ring.

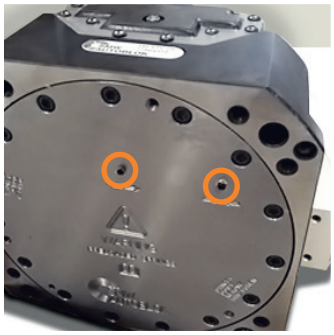

If the SAB-1 is purchased together with the Twin Vise, the assembly and adjustment are done by SMW-Autoblok personnel at our factories.

Soft top jaws

for Twin Vises

- Soft blank top jaws
- Tongue & Groove

Material: C40 UNI7847

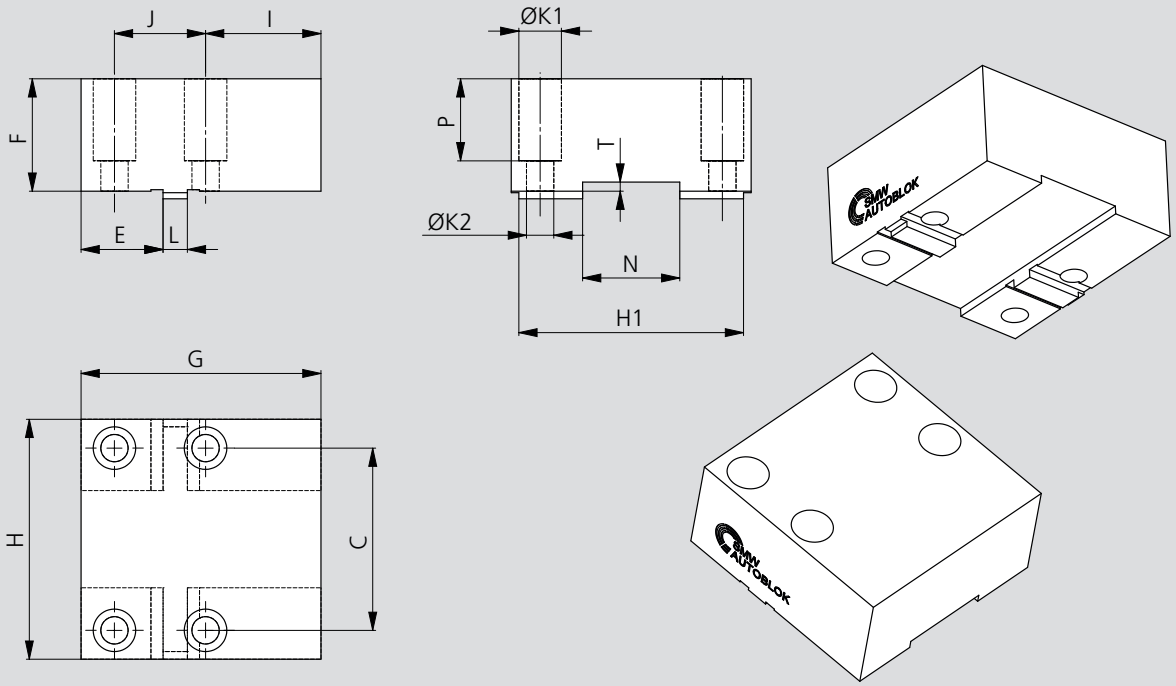

Subject to technical changes.

Soft blank top jaws, Tongue & Groove

Type	Id. No.*	C	E	F	G	H	H1	I	J	K1	K2	L	N	P	T	Clamping range [mm]	Weight [kg]
100 TV / PT	90711063	35	18	27.5	49	54.5	45	21	21	11	7	6h7	20h8	20	3	0 - 70	0.5
125 STV-2 / PT	90711283	35	33	27,5	64	54.5	45	21	35	11	7	6h7	20h8	20	3	0 - 100	0.65
100 TV / PT	90721063	35	18	47.5	49	54.5	45	21	21	11	7	6h7	20h8	40	3	0 - 70	0.85
125 STV-2 / PT	90721283	35	33	47,5	64	54.5	45	21	35	11	7	6h7	20h8	40	3	0 - 100	1.15
160 TV / PT	90711663	60	27	37	79	79	74	38	30	14	9	8h7	32h8	27	3	0 - 120	1.6
180 STV-2 / PT	90711883	60	41	37	93	79	74	38	40	14	9	8h7	32h8	27	3	0 - 140	1.9
160 TV / PT	90721663	60	27	76.5	79	79	74	38	30	14	9	8h7	32h8	66.5	3	0 - 120	3.3
180 STV-2 / PT	90721883	60	41	76.5	93	79	74	38	40	14	9	8h7	32h8	66.5	3	0 - 140	4
200 TV / PT	90712063	80	37	47	98.5	109	92	47.5	40	14	9	8h7	40h8	37	3.5	0 - 150	3.6
200 TV / PT	90722063	80	37	86.5	98.5	109	92	47.5	40	14	9	8h7	40h8	76.5	3.5	0 - 150	6.8
225 STV-2	90712283	80	52	47	113.5	109	92	47.5	50	14	9	8h7	40h8	37	3.5	0 - 170	4.2
225 STV-2	90722283	80	52	86.5	113.5	109	92	47.5	50	14	9	8h7	40h8	76.5	3.5	0 - 170	7.9
250 TV	90712563	90	59	47	120	124	/	44	48	18	11	10h7	50h8	31	3.5	0 - 180	5
250 TV	90722563	90	59	97.5	120	124	/	44	48	18	11	10h7	50h8	81.5	3.5	0 - 180	10.5
315 TV	90713163	120	54	57	150	160	/	75	60	20	13.5	12h7	60h8	42	3.5	0 - 240	10
315 TV	90723163	120	54	102.5	150	160	/	75	60	20	13.5	12h7	60h8	87.5	3.5	0 - 240	18

*The Id. No. refers to one single piece.

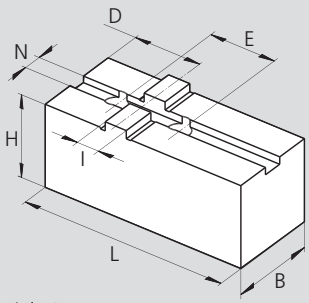

Material: C40 UNI7847

Tongue & Groove soft blank top jaws "C" for Twin Vise STV-3

Type	Id. No.*	B	H	L	N	D	E	I	Clamping range [mm]	Weight [kg]
180 STV-3	12041660	30	32	80	7.94	30	38.1	12.68	0 - 140	0.58
225 STV-3	12042060	35	37	100	7.94	35	44.4	12.68	0 - 170	0.92

*The Id. No. refers to one single piece.

Soft top jaws

for Twin Vises

Material: C40 UNI7847

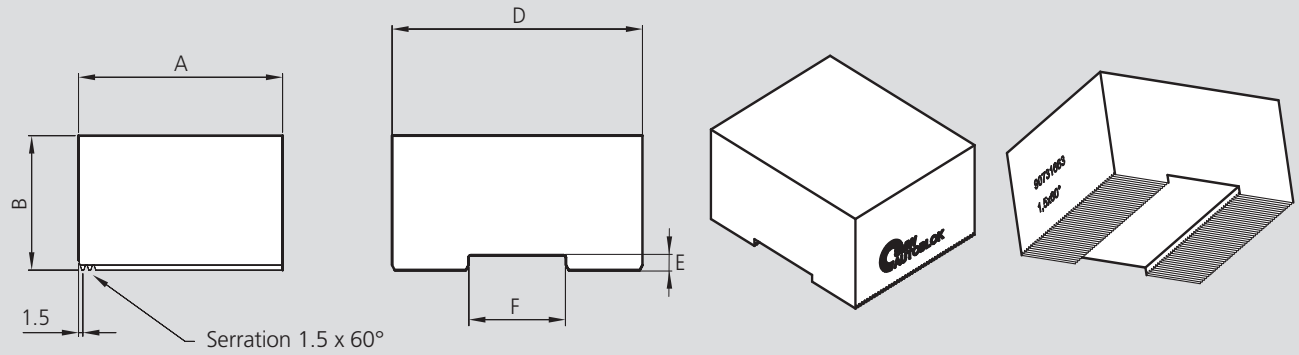

Subject to technical changes.

Soft blank top jaws, fine serration 1.5 mm x 60°

Type	Id. No.*	A	B	D	E	F	Weight [kg]
100-125 TV	90731063	42	29.5	54.5	3.5	20H8	0.5
100-125 TV	90741063	47	49.5	54.5	3.5	20H8	0.95
160-180 TV	90731663	66	39.5	79	3.5	32H8	1.5
160-180 TV	90741663	76	79	79	3.5	32H8	3.6
200-225 TV	90732063	87	49.5	109	4	40H8	3.5
200-225 TV	90742063	87	89	109	4	40H8	6.5
250 TV	90732563	108	49.5	124	4	50H8	5
250 TV	90742563	108	99	124	4	50H8	10.2
315 TV	90733163	160	49.5	160	4	60H8	9.6
315 TV	90743163	160	105	160	4	60H8	20.7

*The Id. No. refers to one single piece.

Material: C40 UNI7847

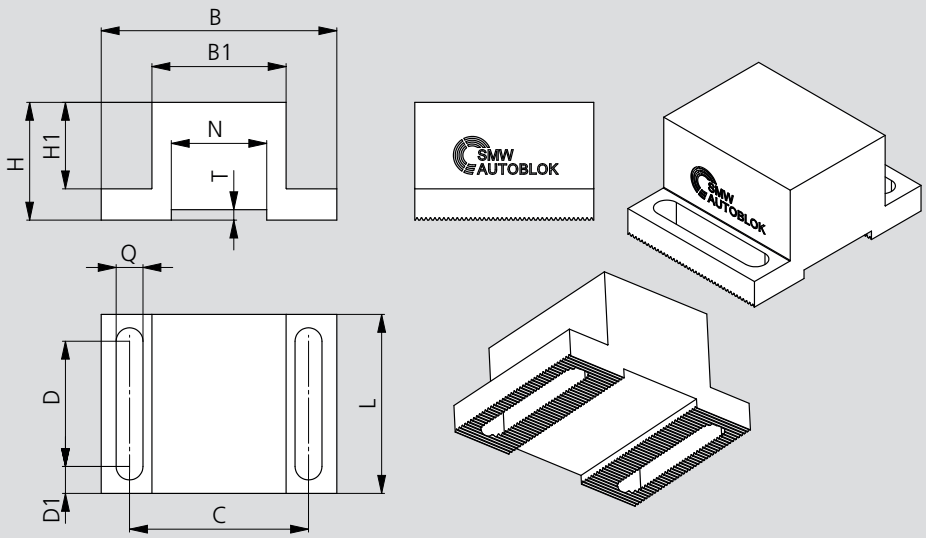

Subject to technical changes.

Soft blank top jaws, fine serration 1.5 mm x 60°

Type	Id. No.*	B	B1	C	D	D1	H	H1	L	N	Q	T	Weight [kg]
100-125 TV	90751063	54.5	24	35	30	6	29.5	21.5	42	20H8	6.6	3.5	0.25
160-180 TV	90751663	79	45	60	42	9	39.5	29	60	32H8	9	3.5	0.9
200-225 TV	90752063	109	65	80	62	9	49.5	39	80	40H8	9	4	2
250 TV	90752563	124	72	90	62	14	49.5	33	90	50H8	11	4	2.7
315 TV	90753163	160	90	120	82	12	49.5	31.5	106	60H8	13.5	4	4.2

*The Id. No. refers to one single piece.

Wide hard top jaws

Top jaws SinterGrip

- Hard top jaws with SinterGrip inserts
- Metric serrated 1.5 mm x 60°

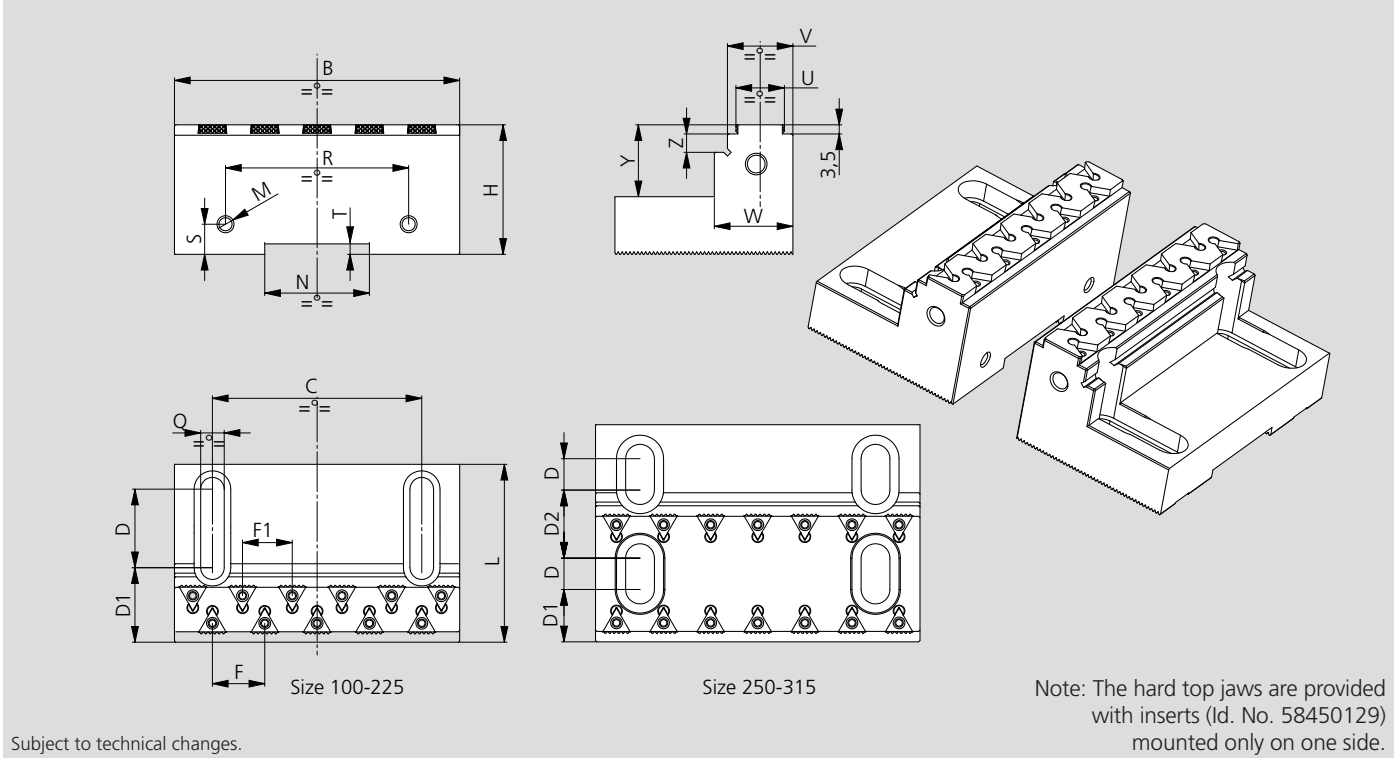

Subject to technical changes.

Note: The hard top jaws are provided with inserts (Id. No. 58450129) mounted only on one side.

Wide hard top jaws dimensions

Type	Id. No. set of 2 top jaws	B [mm]	C [mm]	D [mm]	D1 [mm]	D2 [mm]	F [mm]	F1 [mm]	H [mm]	L [mm]	M [mm]	N [mm]	Q [mm]	R [mm]	S [mm]	T [mm]	U [mm]	V [mm]	W [mm]	Y [mm]	Z [mm]	No. inserts provided	*N° seat inserts	Weight [kg]
100-125 TV-STV-PT	58454115	72	35	21	9	/	12/23	12/23	26	39	M5	20H8	6,6	60	10	3,5	21.5	28	33	13	5	8	16	0.7
160-180 TV-STV-PT	58454125	104	60	30	14	/	15/28	15/28	34.5	57	M6	32H8	9	86	11,5	3,5	21.5	28	33	15.5	5	10	20	2
200-225 TV-STV-PT	58454135	109	80	30	29	/	20	19	34.5	68	M6	40H8	9	70	11,5	4	18.5	25	30	15.5	7	12	22	2.3
250 TV-PT	58454145	124	90	12	20	26	18	18	39.5	83	M8	50H8	11	80	15	4	45.5	52	57	17.5	7	14	28	4.3
315 TV	58454155	160	120	15	23,5	35	20	20	44.5	105	M8	60H8	13	80	15	4	55.5	62	67	17.5	7	16	32	8.3

*The number of seats inserts indicated refers to set of 2 top jaws

Wide hard top jaws, clamping ranges for long and normal stroke Twin Vise models

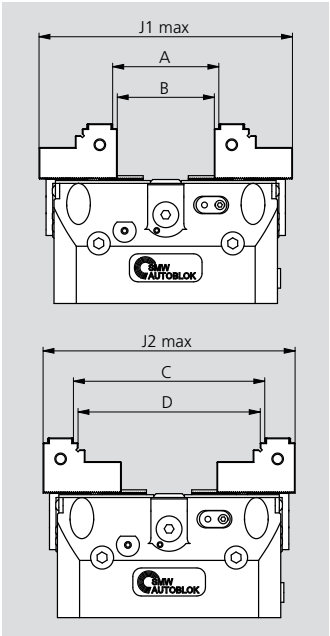

Id. No. set of 2 top jaws	Type	A [mm]	B [mm]	J1 max. [mm]	C [mm]	D [mm]	J2 max. [mm]	Gripping force max. [kN]**
58454115	100 TV-N	10 - 32	4 - 25	106	32 - 70	25 - 63	122	13
	100 TV-L							
	100 PT-N	10 - 46	4 - 40	120	32 - 83	25 - 76	135	13
	100 PT-L							
	125 PT-N	10 - 60	4 - 53	134	32 - 98	25 - 91	150	22
	125 PT-L							
	125 STV-N	10 - 60	4 - 53	134	32 - 98	25 - 91	150	26
	125 STV-L							
58454125	160 TV-N	10 - 70	4 - 63	180	66 - 138	59 - 131	190	40
	160 TV-L							
	160 PT-N	10 - 70	4 - 63	180	66 - 138	59 - 131	190	40
	160 PT-L							
	180 STV-N	10 - 85	4 - 78	195	66 - 160	59 - 153	213	54
	180 STV-L							
58454135	200 TV-N	10 - 93 (***)	4 - 86	225	96 - 175	89 - 168	220	60
	200 TV-L	10 - 96	4 - 89	228				
	200 PT-N	10 - 93 (***)	4 - 86	225	96 - 175	89 - 168	220	60
	200 PT-L	10 - 96	4 - 89	228				
	225 STV-N	10-96	4 - 89	228	96 - 202	89 - 196	250	66
	225 STV-L							
58454145	250 TV-N	10 - 88	4 - 82	250	88 - 192	82 - 186	292	60
	250 TV-L	10 - 106	4 - 100	270	88 - 202	82 - 196	302	
	250 PT-N	10 - 88	4 - 82	250	88 - 192	82 - 186	292	60
	250 PT-L	10 - 106	4 - 100	270	88 - 202	82 - 196	302	
58454155	315 TV-N	18 - 108	12 - 102	315	104 - 246	98 - 240	366	100
	315 TV-L	18 - 132	12 - 126	338	120 - 255	114 - 248	375	

** the maximum gripping force values are indicative since they depend on the number of inserts used.

***with 200 TV-PN and 200 PT-N models it is not possible to clamp workpieces with dimensions between from 93 to 96 mm.

Wide hard top jaws

- Hard top jaws with SinterGrip inserts
- Metric serrated 1.5 mm x 60°

Top jaws SinterGrip

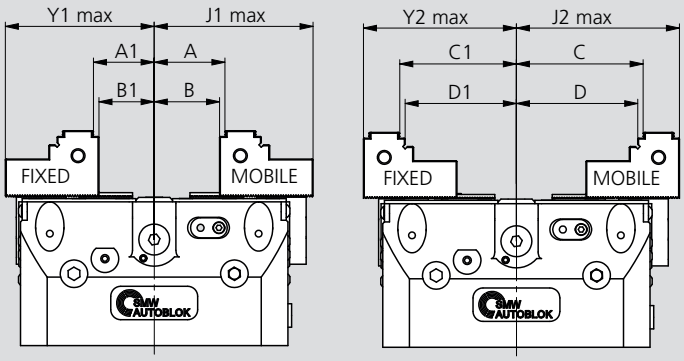

NOTE: the A1 - B1 - C1 -D1 dimensions for fixed jaws clamping range have tolerance ± 0.75 mm due to the serration pitch 1.5 mm.

Subject to technical changes.

Wide hard top jaws, clamping ranges for one fixed jaw Twin Vise models

Id. No. set of 2 top jaws	Type	A [mm]	B [mm]	A1 [mm]	B1 [mm]	J1 max. [mm]	Y1 max. [mm]	C [mm]	D [mm]	C1 [mm]	D1 [mm]	J2 max. [mm]	Y2 max. [mm]	Gripping force max. [kN]**
58454115	100 TV-F	5 - 16	2 - 13	5 - 16	2 - 13	53	52	16 - 35	13 - 32	16 - 35	13 - 32	61	60	13
	100 PT-F	5 - 23	2 - 20	5 - 23	2 - 20	60	59	16 - 41	13 - 38	16 - 41	13 - 38	67	66	13
	125 PT-F	5 - 30	2 - 27	5 - 30	2 - 27	67	66	16 - 49	13 - 46	16 - 49	13 - 46	75	74	15
58454125	160 TV-F	5 - 35	2 - 32	5 - 35	2 - 32	90	89	33 - 69	30 - 66	33 - 69	30 - 66	95	93	32
	160 PT-F	5 - 35	2 - 32	5 - 35	2 - 32	90	89	33 - 69	30 - 66	33 - 69	30 - 66	95	93	32
58454135	200 TV-F	5 - 48	2 - 45	5 - 48	2 - 45	114	113	48 - 87	45 - 84	48 - 87	45 - 84	110	109	44
	200 PT-F	5 - 48	2 - 45	5 - 48	2 - 45	114	113	48 - 87	45 - 84	48 - 87	45 - 84	110	109	44
58454145	250 TV-F	5 - 53	2 - 50	5 - 53	2 - 50	135	134	44 - 101	41 - 98	44 - 88	41 - 85	151	137	40
58454155	315 TV-F	9 - 66	6 - 63	9 - 66	6 - 63	169	168	60 - 127	57 - 124	60 - 112	57 - 109	187	171	65

** the maximum gripping force values are indicative since they depend on the number of inserts used.

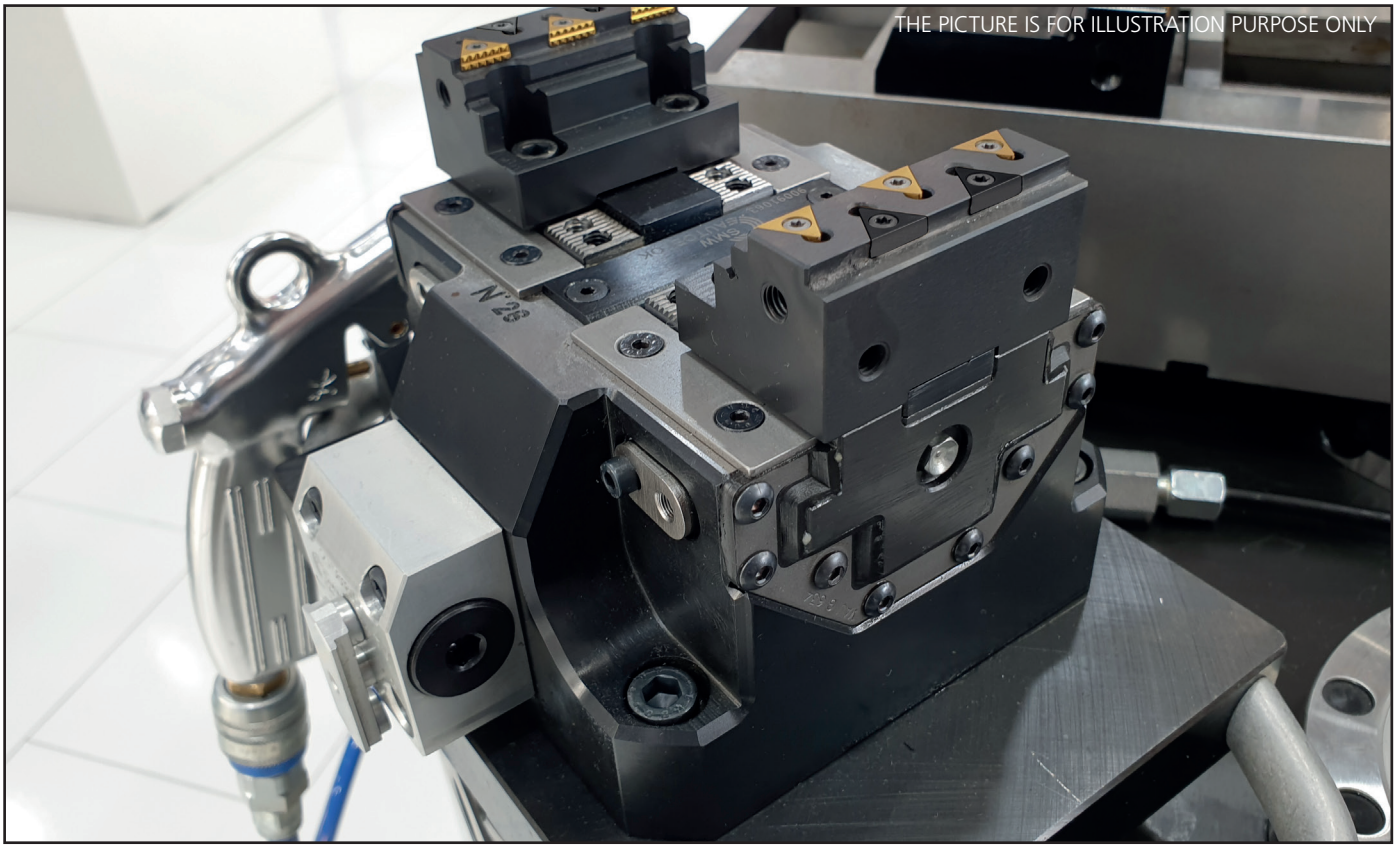

Narrow hard top jaws

Top jaws SinterGrip

- Hard top jaws with SinterGrip inserts
- Metric serrated 1.5 mm x 60°

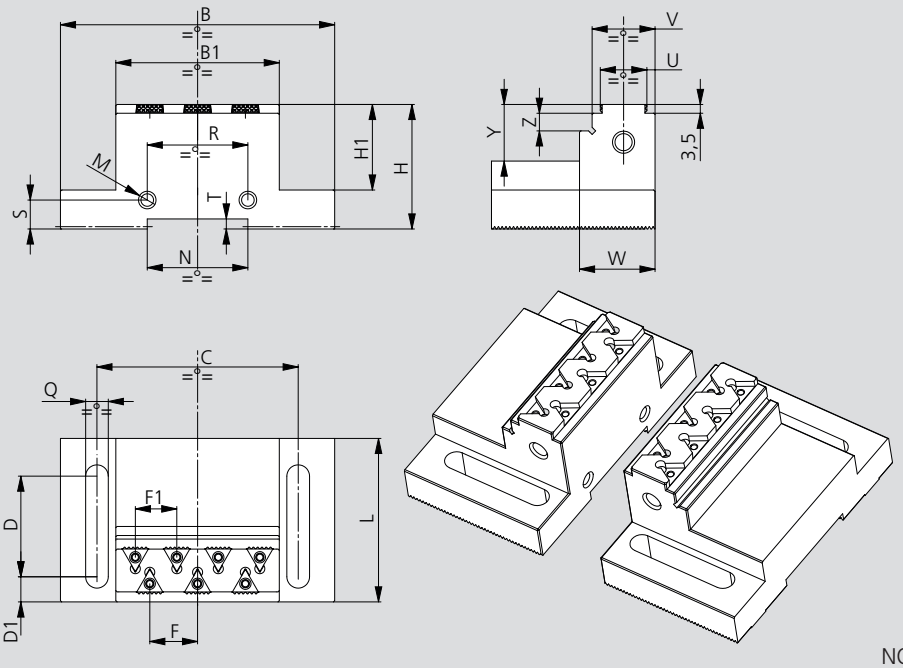

NOTE: the hard top jaws are provided with inserts (Id. No. 58450129) mounted only on one side.

Subject to technical changes.

Narrow hard top jaws dimensions

Type	Id. No. set of 2 top jaws	B [mm]	B1 [mm]	C [mm]	D [mm]	D1 [mm]	F [mm]	F1 [mm]	H [mm]	H1 [mm]	L [mm]	M [mm]	N [mm]	Q [mm]	R [mm]	S [mm]	T [mm]	U [mm]	V [mm]	W [mm]	Y [mm]	Z [mm]	N° inserts provided	*N° seat inserts	Weight [Kg]
100-125 TV-STV-PT	58454215	54,5	24	35	27	6	12	12	29,5	20	39	-	20H8	6,6	-	-	3,5	21,5	28	33	17,5	7	4	8	0.4 kg
160-180 TV-STV-PT	58454225	79	45	60	38	9	20	15,5	39,5	26	56	M6	32H8	9	26	11,5	3,5	18,5	25	30	17,5	7	6	10	1.3 kg
200-225 TV-STV-PT	58454235	109	65	80	40	10	19	16,5	44,5	27,5	65	M6	40H8	9	40	11,5	4	18,5	25	30	18,5	7	8	14	2.5 kg
250 TV-PT	58454245	124	72	90	48	14	14	14	49,5	34	76	M6	50H8	11	40	11,5	4	21,5	28	33	20,5	7	10	20	3.5 kg
315 TV	58454255	160	90	120	60	15	15	15	49,5	32	90	M6	60H8	13	60	15	4	27,5	34	39	19,5	7	12	24	5.5 kg

*The number of seats inserts indicated refers to set of 2 top jaws

Narrow hard top jaws, clamping ranges for long and normal stroke Twin Vise models

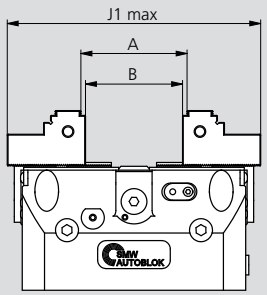

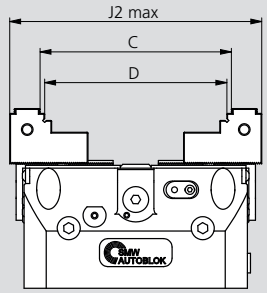

**the maximum gripping force values are indicative since they depend on the number of inserts used.

Id. No. set of 2 top jaws	Type	A [mm]	B [mm]	J1 max. [mm]	C [mm]	D [mm]	J2 max. [mm]	Gripping force max. [kN]**
58454215	100 TV-N	10-32	4-25	106	32-75	25-68	127	13
	100 TV-L							
	100 PT-N	10-46	4-40	120	32-85	25-78	137	13
	100 PT-L							
	125 PT-N	10-60	4-53	134	32-100	25-93	152	22
	125 PT-L							
	125 STV-N	10-60	4-53	134	32-100	25-93	152	26
	125 STV-L							
58454225	160 TV-N	10-74	4-67	182	74-140	67-133	188	40
	160 TV-L							
	160 PT-N	10-74	4-67	182	74-140	67-133	188	40
	160 PT-L							
	180 STV-N	10-88	4-82	196	74-160	67-153	208	54
	180 STV-L	10-98	4-92	206				
58454235	200 TV-N	10-93	4-87	220	93-175	87-168	220	60
	200 TV-L							
	200 PT-N	10-93	4-87	220	93-175	87-168	220	60
	200 PT-L							
	225 STV-N	10-110	4-104	237	93-202	87-196	250	66
	225 STV-L	10-120	4-114	247				
58454245	250 TV-N	22-108	16-102	255	108-218	102-212	272	60
	250 TV-L	22-122	16-116	270				
	250 PT-N	22-108	16-102	255	108-218	102-212	272	60
	250 PT-L	22-122	16-116	270				
58454255	315 TV-N	30-138	23-132	315	138-275	132-268	340	100
	315 TV-L	30-162	23-156	338	160-275	154-268	340	

Narrow hard top jaws

Top jaws SinterGrip

- Hard top jaws with SinterGrip inserts
- Metric serrated 1.5 mm x 60°

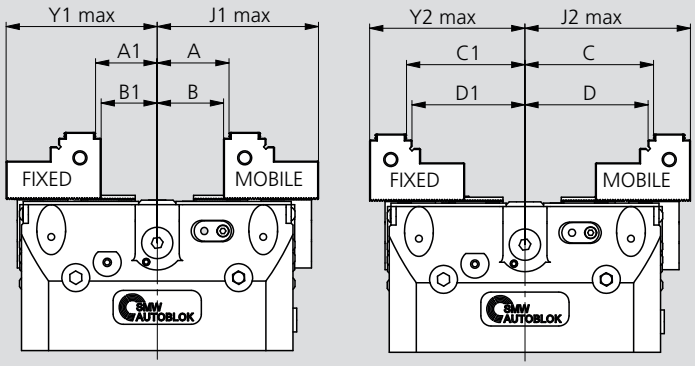

NOTE: the A1 - B1 - C1 -D1 dimensions for fixed jaws clamping range have tolerance ± 0.75 mm due to the serration pitch 1.5 mm

Subject to technical changes.

Narrow hard top jaws, clamping ranges for fixed jaw Twin Vise models

Id. No. set of 2 top jaws	Type	A [mm]	B [mm]	A1 [mm]	B1 [mm]	J1 max. [mm]	Y1 max. [mm]	C [mm]	D [mm]	C1 [mm]	D1 [mm]	J2 max. [mm]	Y2 max. [mm]	Gripping force max. [kN]**
58454215	100 TV-F	5 - 16	2 - 13	5 - 16	2 - 13	53	52	16 - 38	13 - 34	16 - 38	13 - 34	64	63	13
	100 PT-F	5 - 23	2 - 20	5 - 23	2 - 20	60	59	16 - 43	13 - 40	16 - 43	13 - 40	69	68	13
	125 PT-F	5 - 30	2 - 27	5 - 30	2 - 27	67	66	16 - 50	13 - 47	16 - 50	13 - 47	76	75	15
58454225	160 TV-F	5 - 37	2 - 34	5 - 37	2 - 34	91	90	37 - 70	34 - 67	37 - 70	34 - 67	94	92	32
	160 PT-F	5 - 37	2 - 34	5 - 37	2 - 34	91	90	37 - 70	34 - 67	37 - 70	34 - 67	94	92	32
58454235	200 TV-F	5 - 47	2 - 44	5 - 47	2 - 44	110	109	47 - 87	44 - 84	47 - 87	44 - 84	110	109	44
	200 PT-F	5 - 47	2 - 44	5 - 47	2 - 44	110	109	47 - 87	44 - 84	47 - 87	44 - 84	110	109	44
58454245	250 TV-F	11 - 61	8 - 58	11 - 61	8 - 58	135	134	54 - 109	51 - 106	54 - 109	51 - 106	136	134	40
58454255	315 TV-F	15 - 81	12 - 78	15 - 81	12 - 78	169	168	80 - 137	77 - 134	80 - 137	77 - 134	170	168	65

** the maximum gripping force values are indicative since they depend on the number of inserts used.

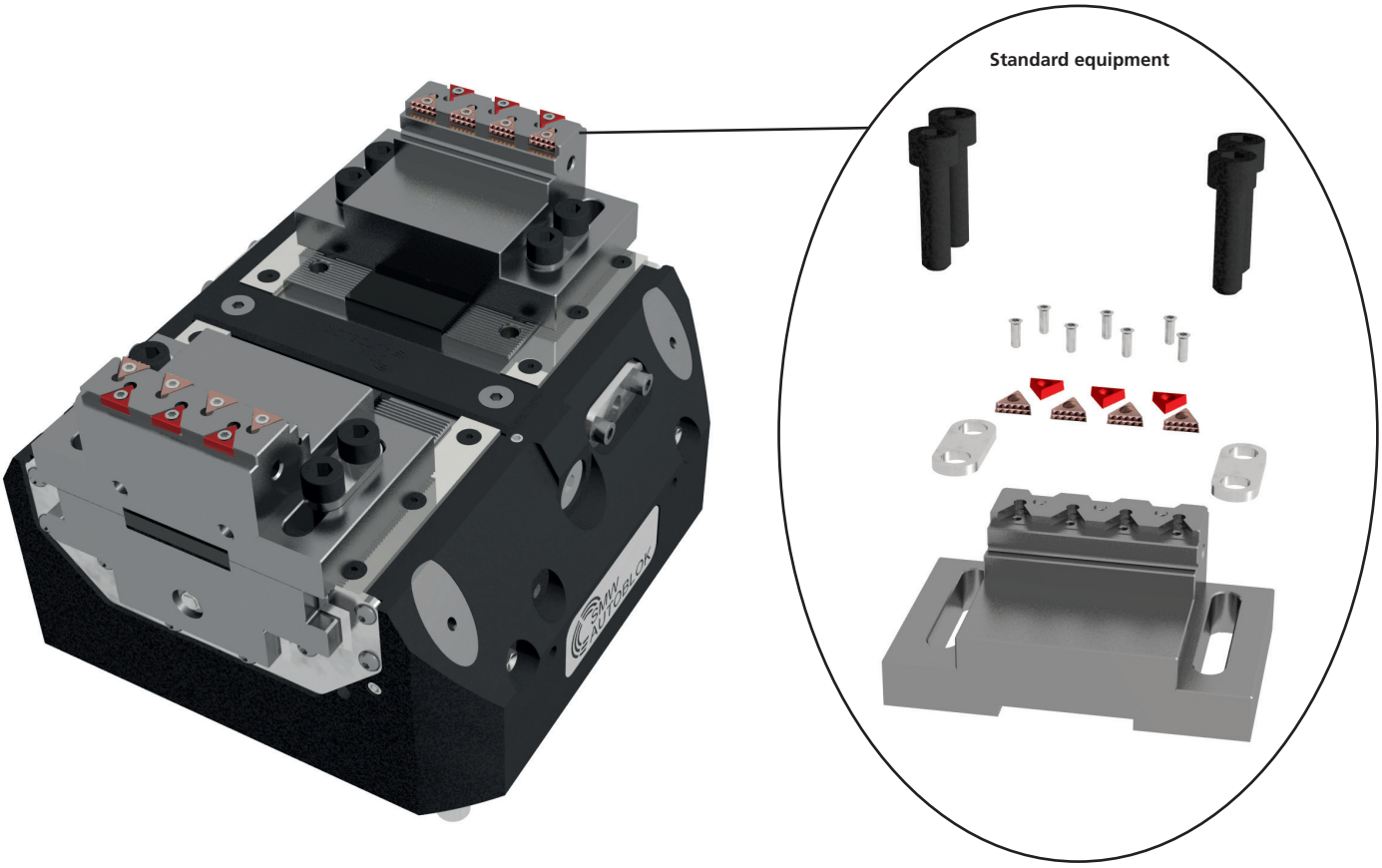

Stroke control proximities

Optional

■ Pneumatic jaw stroke control valve

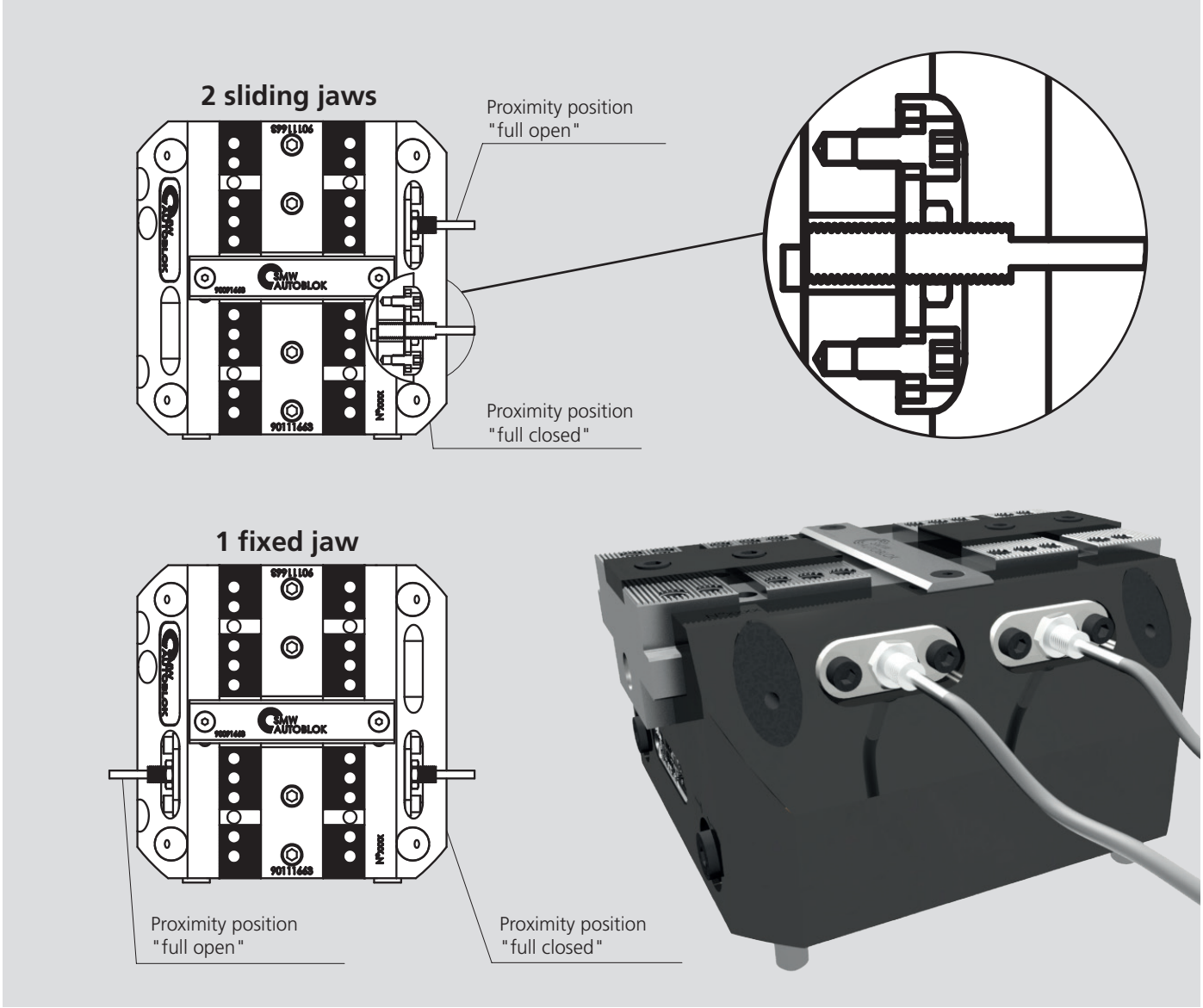

Twin Vise type	Thread	Sensor Balluff*	OMRON (alternative)	Telemecanique (alternative)	S	L
100 TV	M5x0,5	BES516-3005-G-E4-C-PU02	E2EX1-B1	XS1N05PA310	0.5	20
160-200-250 TV	M8x1	BES516-324-G-E4-C-PU02	E2AS08KS02-WP-B12M	XS508B1PAL2	1	30
315 TV	M8x1	BESE08EF-PSC20B-BP02	E2AS08LS02-WP-BI2M	XS508BLPAL2	1	40
125 STV-2	M5x0,5	BES516-3005-G-E4-C-PU02	E2EX1-B1	XS1N05PA310	0.5	20
180-225 STV-2	M8x1	BES516-324-G-E4-C-PU02	E2AS08KS02-WP-B12M	XS508B1PAL2	1	30
100-125 PT	M5x0,5	BES516-3005-G-E4-C-PU02	E2EX1-B1	XS1N05PA310	0.5	20
160-200-250 PT	M8x1	BES516-324-G-E4-C-PU02	E2AS08KS02-WP-B12M	XS508B1PAL2	1	30

* Recommended by SMW-AUTOBLOK

Pneumatic valve

■ Pneumatic jaw stroke control valve

Optional

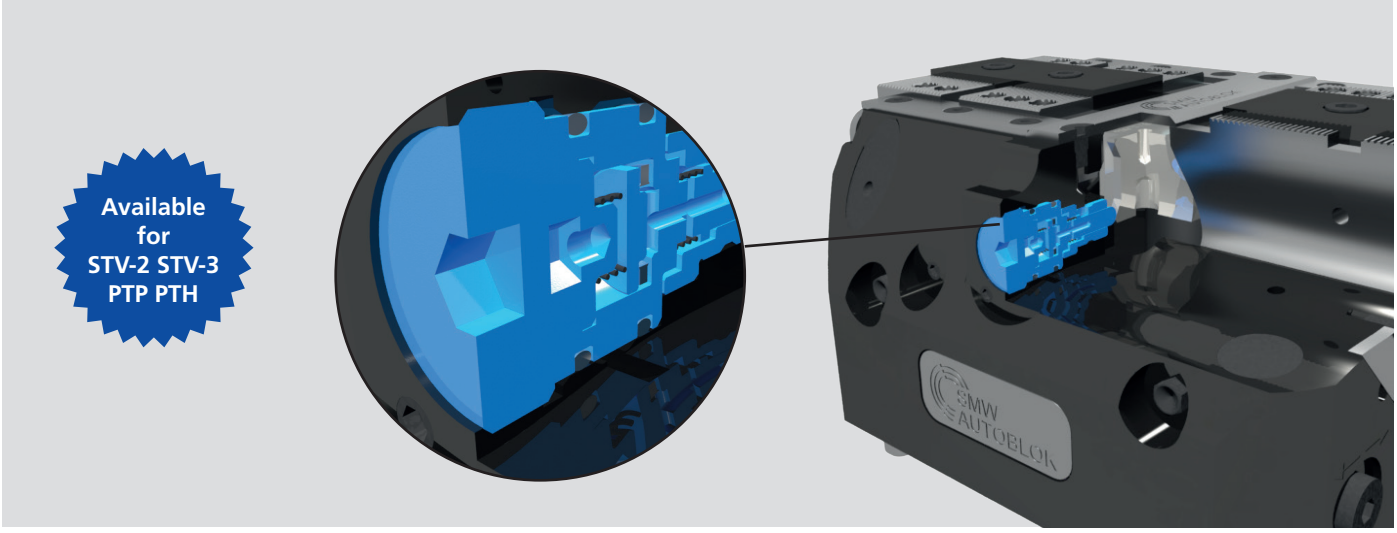

Twin Vise type	Id. No.
125 STV-2	90902283
180 STV-2	90902283
225 STV-2	90902283
180 STV-3	97901801
225 STV-3	97902204
100 PTP PTH	90901163
125 PTP PTH	90901763
160 PTP PTH	90901763
200 PTP PTH	90901763
250 PTH	90901763

The pneumatic open / close stroke control valve signals the locking jaws end-of-stroke positions, both in fully opened and fully closed positions.
The valve needs a pneumatic line with **filtered and lubricated air and a pressure of 0,5-1 bar**.
• when the locking jaws are in one of the end stroke position (fully opened or closed), the valve is open causing a pressure drop in the pneumatic line or the beginning of an air flow.
• when the locking jaws are in the working stroke, the valve is closed and there is no pressure drop in the pneumatic line and there no air flow.

ONLY THE PTP AND PTH VISES
The vises can be supplied (when requested) with the **opposite functioning** of the valve: that is closed valve at the end of the strokes and open in the working / middle stroke.

4

Safety valve SAB-1

(Optional)

The Safety valve SAB-1 maintains air pressure in the cylinder pallet transportation / storage or machining without feed.

Pneumatic gun

With steel nozzle

Multiple clamping systems from SMW-AUTOBLOK

Advantages for the user:

- Best use of the machine table
- Wide range of standard accessories
- Highest efficiency due to rapid set-up times
- Maximum flexibility: Can be used for single or multi clamping on the machine table and also on tombstones
- Fully protected by covers and guards

SMW-AUTOBLOK offers two different multiple clamping systems: CV with serration 2.5 x 60° and TB with serration 2.0 x 60°. Both of these multiple clamping systems come with different jaw widths and lengths. For the CV system, the "CLAK-System" quick change system for jaws and parallels is available as an option. The user can also clamp safe raw parts using jaws fitted with SinterGrip clamping inserts (see photo).

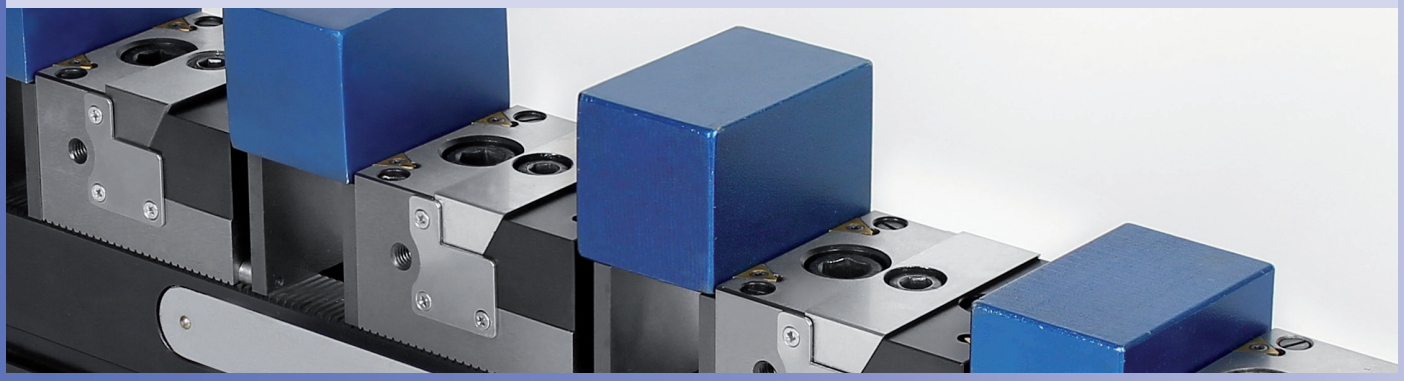

Multiple clamping system

Page 222

CV
Serration 2.5 x 60°

Multiple clamping system

- Quick change system „CLAK-System“ for jaws and parallels optional available
- Wide range of accessories

Page 223

CV-S
Serration 2.5 x 60°

Multiple clamping system

- Quick change system „CLAK-System“ for jaws and parallels optional available
- Wide range of accessories
- SinterGrip jaws

Page 232

CV-VCS
CROSS TOMBSTONE

Multiple clamping system

- Steel cross tombstone ready to use on horizontal machining centres
- Wide range of accessories

Page 233

CV-CN
COLUMN

Multiple clamping system

- Full usability on CNC indexing tables
- Modular system: Wide range of accessories
- Quick change system „CLAK-System“ for jaws and parallel claks optional available
- Compact design

Page 234

TB
Serration 2.0 x 60°

Multiple clamping system

- Excellent price-performance ratio

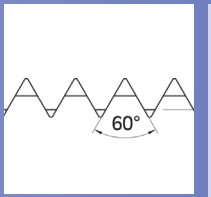

Page 238

CV / TB
Comparison

Different serrations

- CV
- TB

5

CV

Multiple clamping system

■ Serration 2.5 x 60°
■ Quick change system „CLAK-System“ optional available

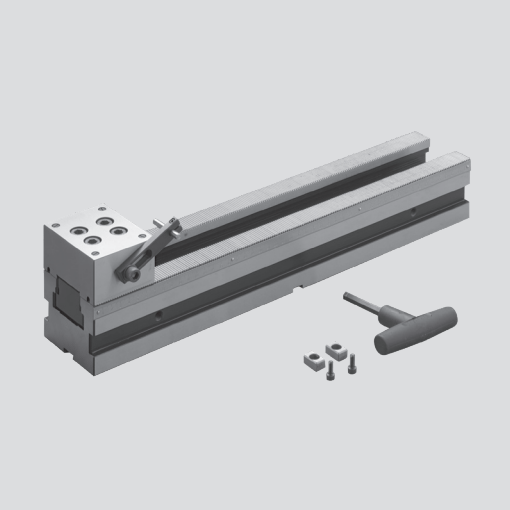

Application/customer benefits

- Full usability of the machine table
- Modular system: Extensive range of accessories
- Quick change system „CLAK-System“ for jaws and parallel claks optional available (see page 229)
- Maximum efficiency due to quick change over
- Can be used for single or multiclamp

Technical features

- Serration 2.5 x 60°
- Jaw width 38 mm, 60 mm und 90 mm, Length 250 mm, 400 mm, 500 mm and 630 mm
- Optional: Interfaces for zero point clamping system APS / WPS / ZeroAct (on request)

Standard equipment

Multiple clamping system:
Base, fix jaw (one side smooth, one side grooved), 1 pair of positioning keys, clamping wrench, workstop

Technical data

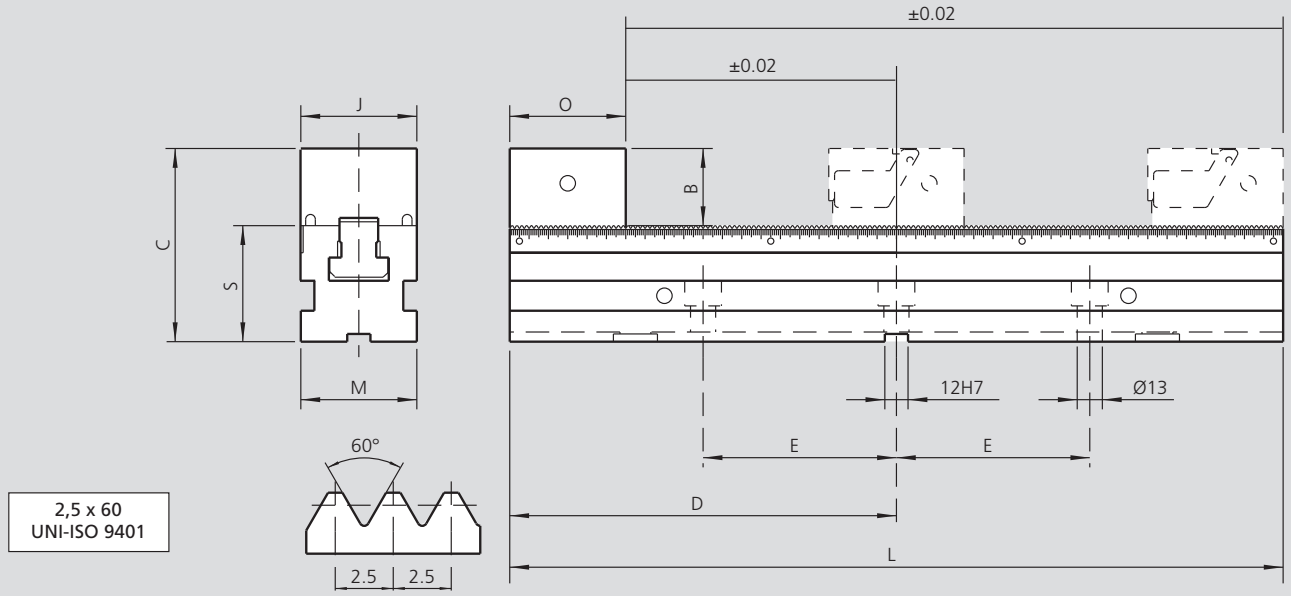

Subject to technical changes.

Type	Id. No.	B [mm]	C [mm]	D [mm]	E [mm]	J [mm]	L [mm]	M [mm]	O [mm]	S ±0.01 [mm]	Weight [kg]
CV 38-250	77584004	40	100	125	100	38	250	60	60	60	6
CV 38-400	77584001			200	100		400				9
CV 38-500	77584002			250	150		500				11
CV 38-630	77584003			315	200		630				13
CV 60-250	77584104	40	100	125	100	60	250	60	60	60	6.5
CV 60-400	77584101			200	100		400				9.5
CV 60-500	77584102			250	150		500				11.5
CV 60-630	77584103			315	200		630				13.5
CV 90-250	77584204	45	115	125	100	90	250	90	70	70	11
CV 90-400	77584201			200	100		400				16
CV 90-500	77584202			250	150		500				19.5
CV 90-630	77584203			315	200		630				23.5

Multiple clamping system

CV-S

- Serration 2.5 x 60°
- Quick change system „CLAK-System“ optional available

Application/customer benefits

- Full usability of the machine table
- Modular system: Extensive range of accessories
- Quick change system „CLAK-System“ for jaws and parallel claks optional available (see page 229)
- Maximum efficiency due to quick change over
- Can be used for single or multiclamp

SinterGrip
Page 116

Technical features

- Serration 2.5 x 60°
- Jaw width 38 mm, 60 mm und 90 mm, Length 250 mm, 400 mm, 500 mm and 630 mm
- Optional: Interfaces for zero point clamping system APS / WPS / ZeroAct (on request)

Standard equipment

Multiple clamping system:
Base, fix jaw (one side with SinterGrip; one side smooth), CV-S 60: 2pcs. STD SinterGrip inserts / CV-S 90: 3pcs. STD SinterGrip inserts (SinterGrip inserts ALU or HRC on request), 1 pair of positioning keys, clamping wrench, workstop

Technical data

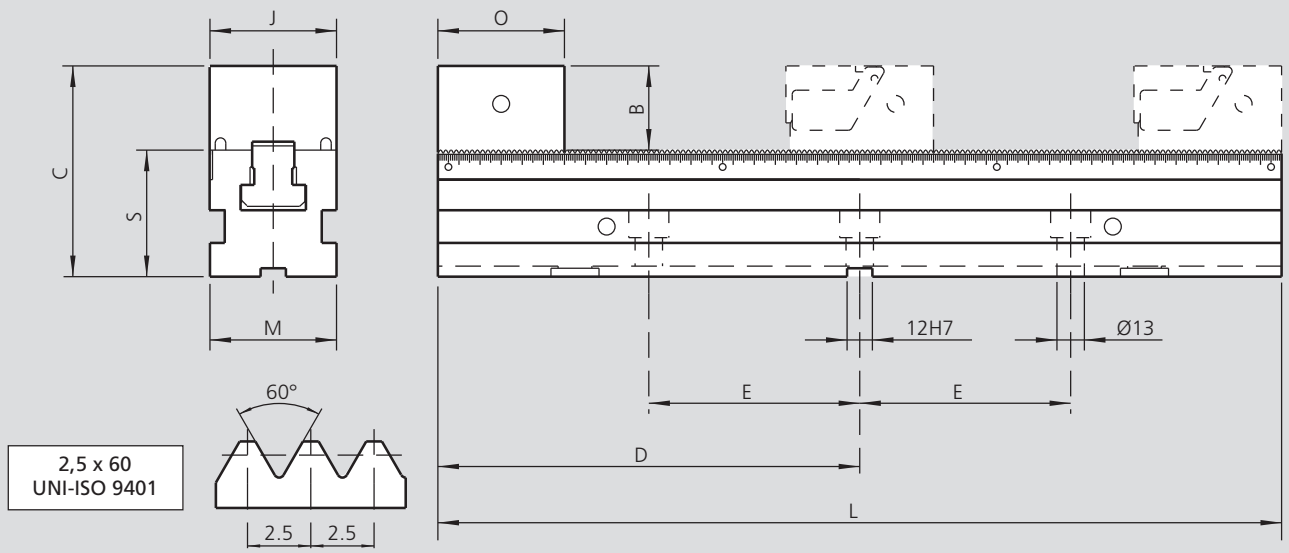

Subject to technical changes.

Type	Id. No.	B [mm]	C [mm]	D [mm]	E [mm]	J [mm]	L [mm]	M [mm]	O [mm]	S ±0.01 [mm]	Weight [kg]
CV-S 60-250	77584664	40	100	125	100	60	250	60	60	60	6.5
CV-S 60-400	77584661			200	100		400				9.5
CV-S 60-500	77584662			250	150		500				11.5
CV-S 60-630	77584663			315	200		630				13.5
CV-S 90-250	77584694	45	115	125	100	90	250	90	70	70	11
CV-S 90-400	77584691			200	100		400				16
CV-S 90-500	77584692			250	150		500				19.5
CV-S 90-630	77584693			315	200		630				23.5

CV / CV-S

Multiple clamping system

- Serration 2.5 x 60°
- Quick change system „CLAK-System“ optional available

Clamping force diagrams

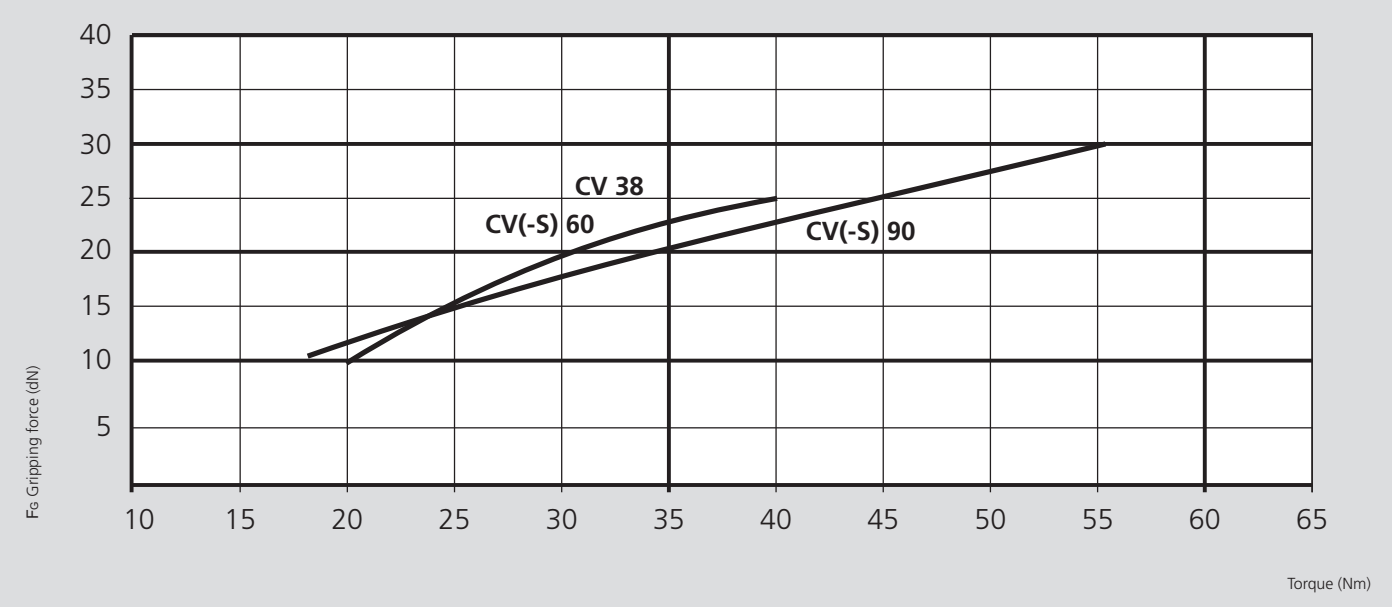

Clamping capacity

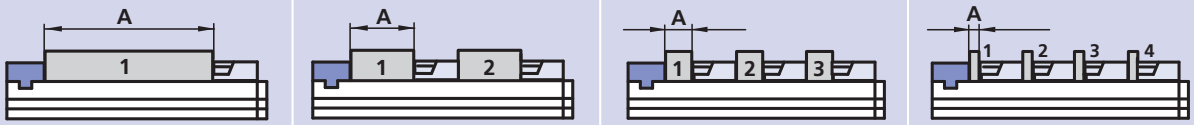

Type	A max. [mm]			
CV 38-250	120	25	-	-
CV 38-400	270	100	43	15
CV 38-500	370	150	76	40
CV 38-630	500	215	120	73
CV(-S) 60-250	120	25	-	-
CV(-S) 60-400	270	100	43	15
CV(-S) 60-500	370	150	76	40
CV(-S) 60-630	500	215	120	73
CV(-S) 90-250	99	-	-	-
CV(-S) 90-400	249	84	29	-
CV(-S) 90-500	349	134	62	26
CV(-S) 90-630	479	199	106	59

Application examples CV-S

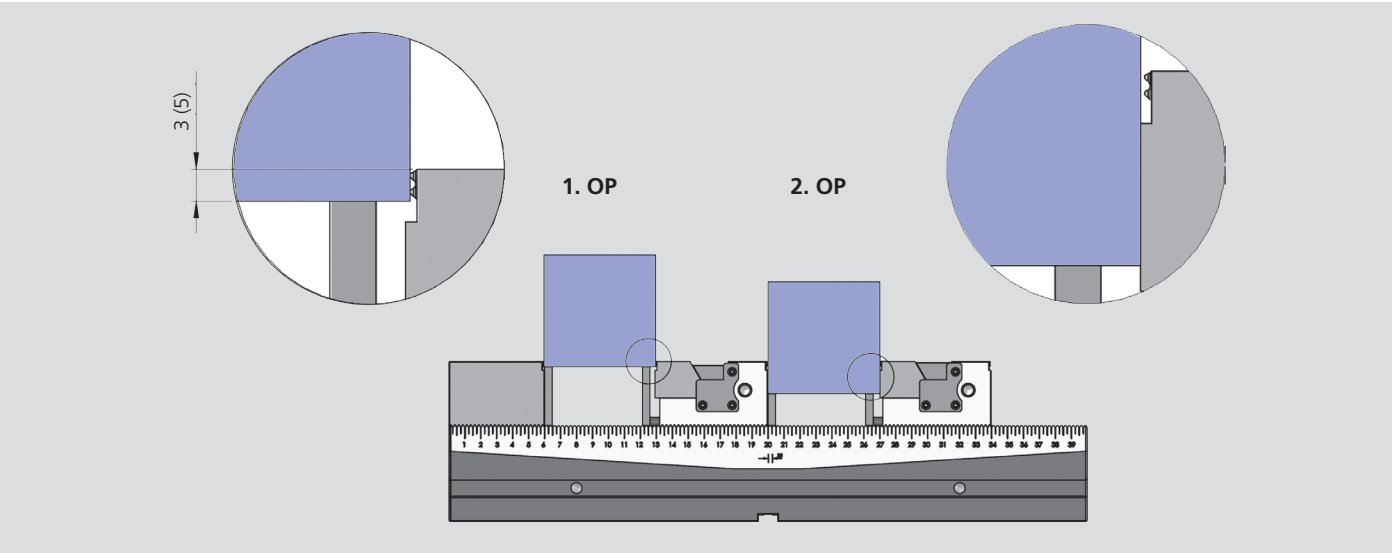

Movable jaw set CV-S 60

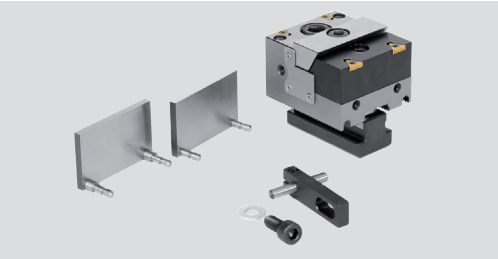

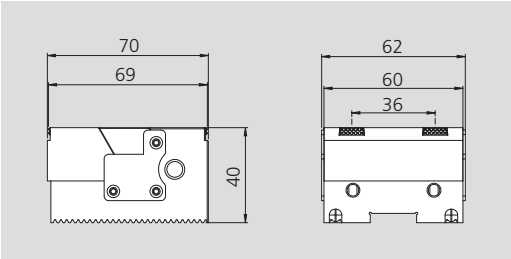

Consisting of:
Movable jaw set
complete with 1 work stop,
4 SinterGrip inserts STD for steel*,
1 pair of parallels H37

SinterGrip Page 116

Type	Id. No.	Weight [kg]
CV-S 60	77584660	1.4

Movable jaw set CV-S 90

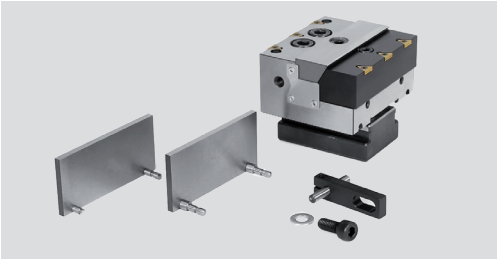

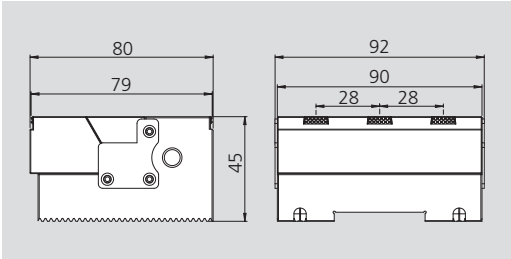

Consisting of:
Movable jaw set
complete with 1 work stop,
6 SinterGrip inserts STD for steel*,
1 pair of parallels H42

SinterGrip Page 116

Type	Id. No.	Weight [kg]
CV-S 90	77584690	2.9

Fixed jaw set CV-S 60

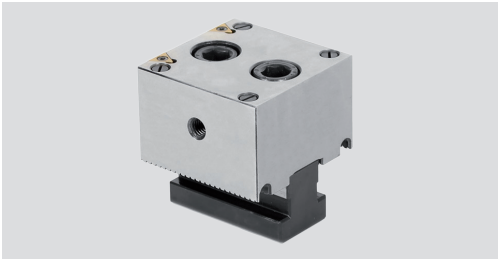

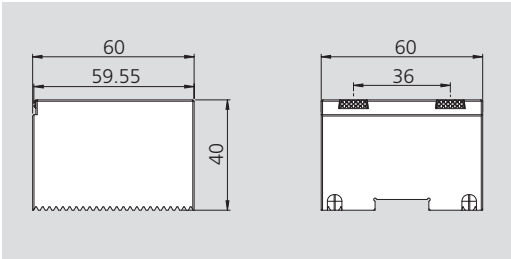

Consisting of:
Fixed jaw set
complete with 1 work stop,
2 SinterGrip inserts STD for steel*

SinterGrip Page 116

Type	Id. No.	Weight [kg]
CV-S 60	58467260	1.4

Fixed jaw set CV-S 90

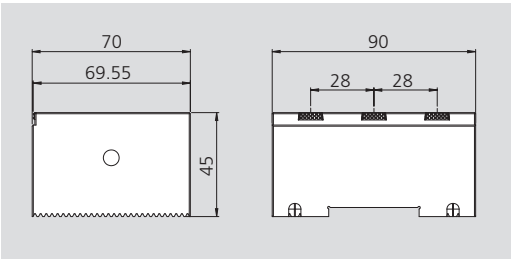

Consisting of:
Fixed jaw set J60
complete with 1 work stop,
3 SinterGrip inserts STD for steel*

SinterGrip Page 116

Type	Id. No.	Weight [kg]
CV-S 90	58467290	2.9

* ALU or HRC on request.

Adjustable jaws with pull down, smooth, set

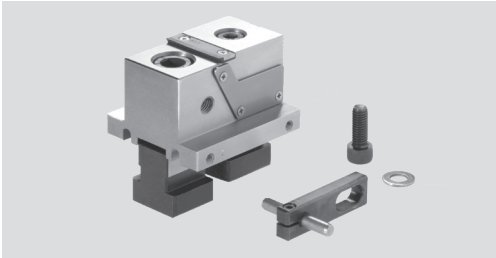

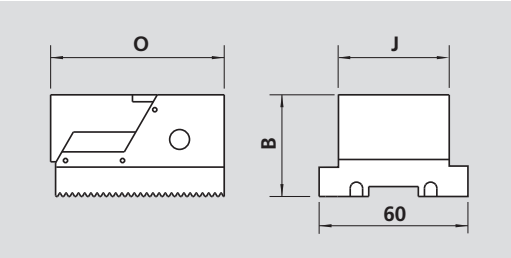

Consisting of:
Adjustable jaws smooth
incl. workstop

Type	Id. No.	B [mm]	J [mm]	O [mm]	Weight [kg]
CV 38	77584023	40	38	70	1

Adjustable jaws with pull down, smooth, set

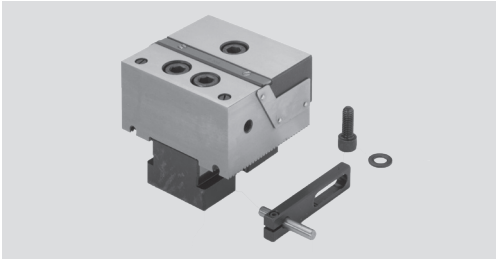

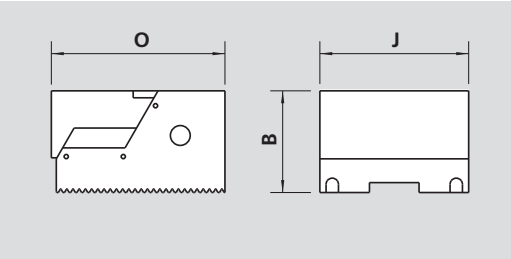

Consisting of:
Adjustable jaws smooth
incl. workstop

Type	Id. No.	B [mm]	J [mm]	O [mm]	Weight [kg]
CV 60	77584123	40	60	70	1.4
CV 90	77584223	45	90	80	2.9

Adjustable jaws with pull down, grooved, set (for raw workpieces)

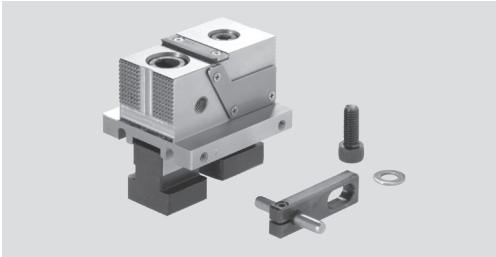

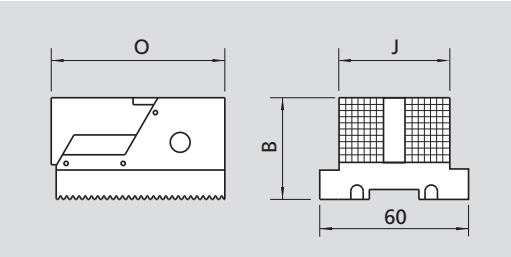

Consisting of:
Adjustable jaws grooved
incl. workstop

Type	Id. No.	B [mm]	J [mm]	O [mm]	Weight [kg]
CV 38	77584028	40	38	70	1

Adjustable jaws with pull down, grooved, set (for raw workpieces)

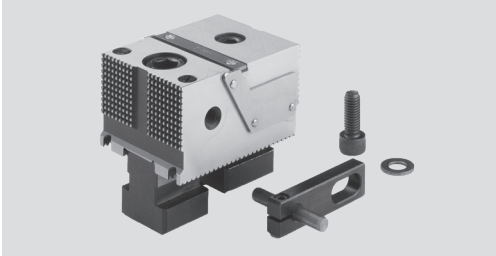

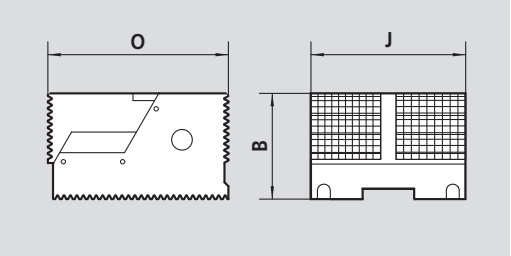

Consisting of:
Adjustable jaws grooved
incl. workstop

Type	Id. No.	B [mm]	J [mm]	O [mm]	Weight [kg]
CV 60	77584128	40	60	70	1.4
CV 90	77584228	45	90	80	2.9

Adjustable jaws double with pull down, smooth, set

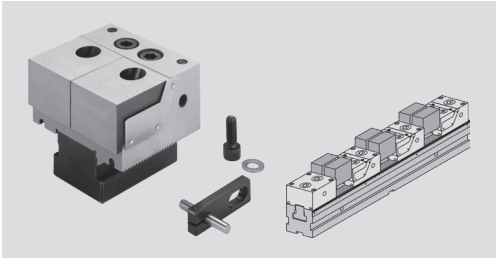

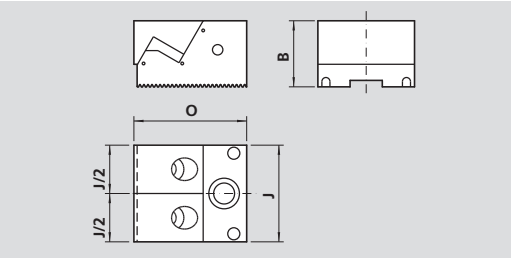

Consisting of:
Adjustable jaws double smooth incl. workstop

Type	Id. No.	B [mm]	J [mm]	O [mm]	Weight [kg]
CV 60	77584124	40	60	70	1.5
CV 90	77584224	45	90	80	3

Adjustable jaws with aluminium-clamping inserts, set

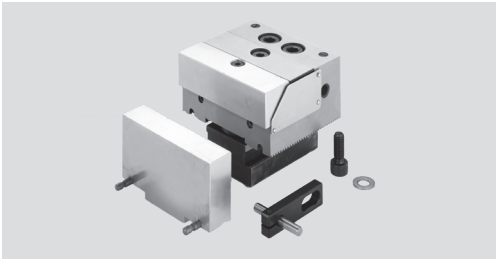

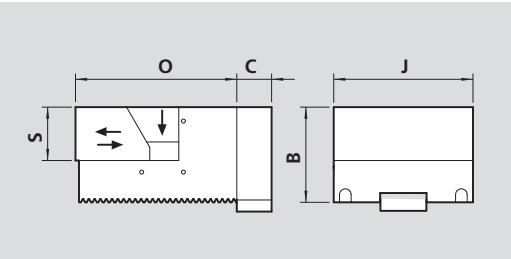

Consisting of:
Adjustable jaws with aluminium-clamping inserts incl. workstop

Type	Id. No.	B [mm]	C [mm]	J [mm]	O [mm]	S [mm]	Weight [kg]
CV 60	77584145	40	15	60	69.5	23	1.2
CV 90	77584245	45	20	90	80	25	2.7

Adjustable jaws with soft steel-clamping inserts, set

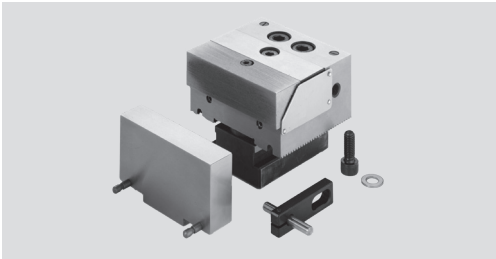

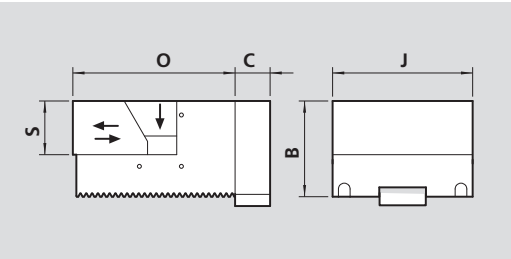

Consisting of:
Adjustable jaws with soft steel-clamping inserts incl. workstop

Type	Id. No.	B [mm]	C [mm]	J [mm]	O [mm]	S [mm]	Weight [kg]
CV 60	77584146	40	15	60	69.5	23	1.4
CV 90	77584246	45	20	90	80	25	3

Adjustable jaws with hard steel-clamping inserts, set

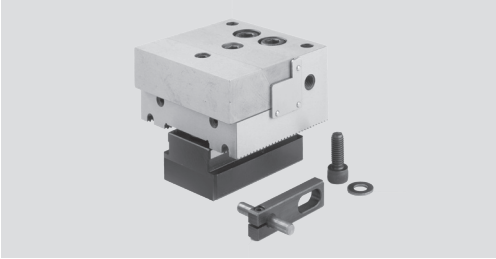

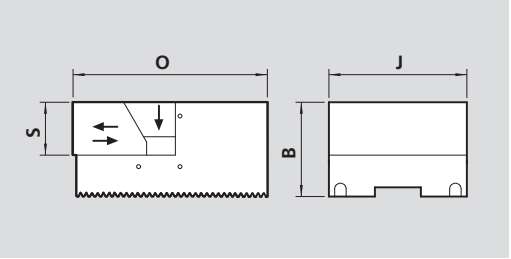

Consisting of:
Adjustable jaws with hard steel-clamping inserts incl. workstop

Type	Id. No.	B [mm]	J [mm]	O [mm]	S [mm]	Weight [kg]
CV 60	77584147	40	60	69.5	23	1.4
CV 90	77584247	45	90	80	25	3

Fix jaws with T-nut, set

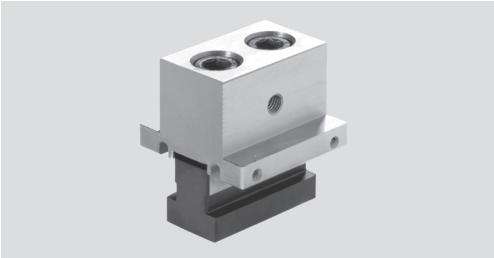

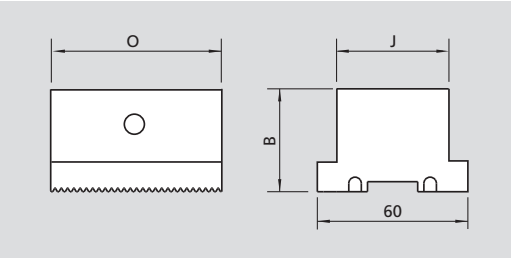

Consisting of:
Fix jaws with T-nuts
Workstop
smooth / grooved

Type	Id. No.	B [mm]	J [mm]	O [mm]	Weight [kg]
CV 38	58407200	40	38	60	1

Fix jaws with T-nut, set

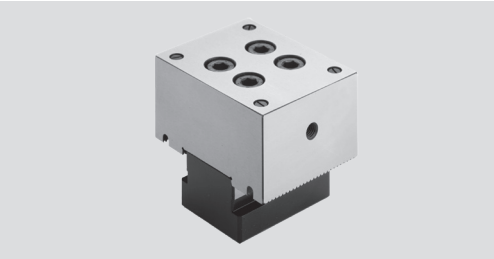

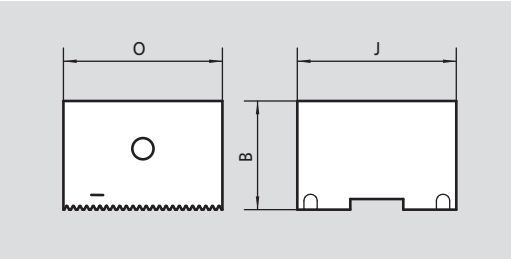

Consisting of:
Fix jaws with T-nuts
Workstop
smooth / grooved

Type	Id. No.	B [mm]	J [mm]	O [mm]	Weight [kg]
CV 60	58417200	40	60	60	1.4
CV 90	58427200	45	90	70	2.9

CLAK-System: Quick change for multiple clamping system CV

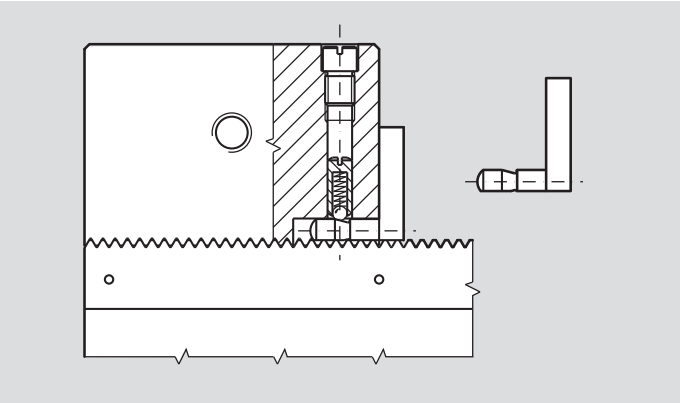

The exclusive and proven CLAK-System, for the quick change of parallels and jaws has been applied for use with the CV. The CLAK-System ensures highest repeatability and minimum set-up times.

This equipment offers:
- The quick change of parallels and jaws
- The elimination of clamps and locks thanks to the patented selflocking system
- The increase in accuracy

All components are heat treated and precision ground.

Parallels with quick change „CLAK-System“, set

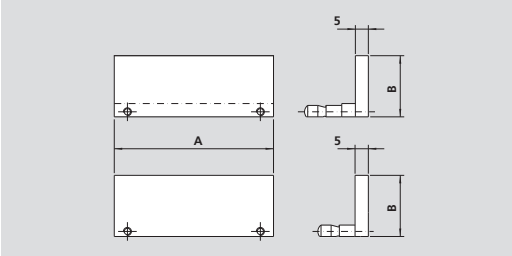

Consisting of:
4 pairs of parallels
with quick change
„CLAK-System“

Type	Id. No.	A [mm]	B [mm]				Weight [kg]
CV 38	58409204	38	18	23	28	37	0.4
CV 60	58419204	60	18	23	28	37	0.49
CV 90	58429204	90	18	23	33	42	0.77

Prism jaw with quick change „CLAK-System“

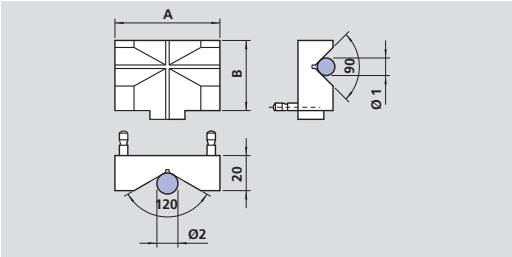

Consisting of:
Prism jaw
with quick change
„CLAK-System“

Type	Id. No.	A [mm]	B [mm]	Ø 1		Ø 2	
				min. [mm]	max. [mm]	min. [mm]	max. [mm]
CV 38	58409400	38	40	10	24	9	45
CV 60	58419400	60	40	10	28	11	70
CV 90	58429400	90	45	10	28	11	70

Clamping insert, hard, serrated

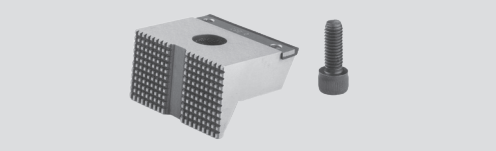

Type	Id. No.
CV 38	58404419
CV 60	58414419
CV 90	58424419

Clamping insert, hard, smooth

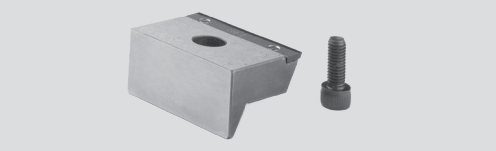

Type	Id. No.
CV 38	58400409
CV 60	58410409
CV 90	58420409

Pair of parallels, with quick change „CLAK-System“

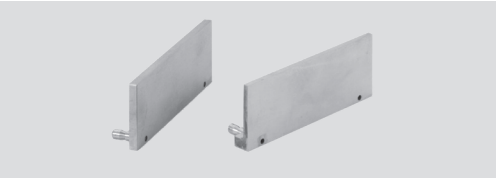

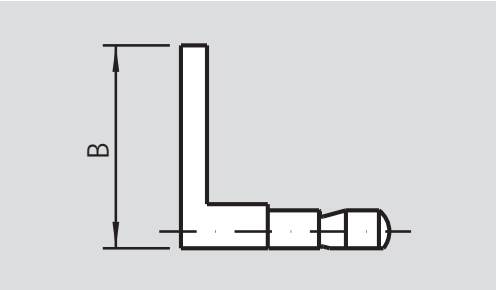

Type	Id. No.	B [mm]
CV 38	58403518	18
CV 38	58403523	23
CV 38	58403528	28
CV 38	58403537	37
CV 60	58413518	18
CV 60	58413523	23
CV 60	58413528	28
CV 60	58413535	35
CV 60	58413537	37
CV 90	58423518	18
CV 90	58423523	23
CV 90	58423533	33
CV 90	58423540	40
CV 90	58423542	42

Pair of parallels, soft, in aluminium, with quick change „CLAK-System“

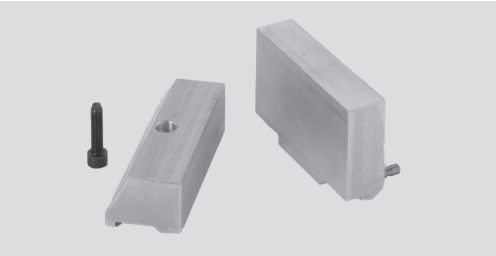

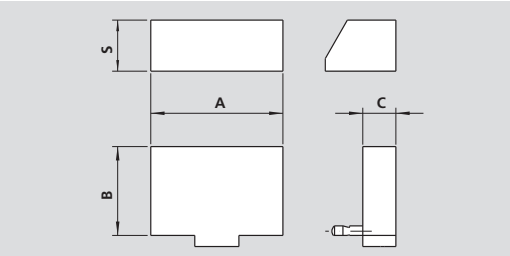

Consisting of:
Pair of soft clamping inserts
in aluminium,
with jaw quick change
„CLAK-System“

Type	Id. No.	A [mm]	B [mm]	C [mm]	S [mm]	Weight [kg]
CV 60	58419549	60	40	15	23	0.19
CV 90	58429549	90	45	20	25	0.4

Pair of clamping inserts, soft, in steel, with quick change „CLAK-System“

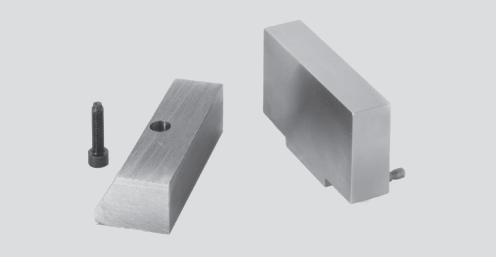

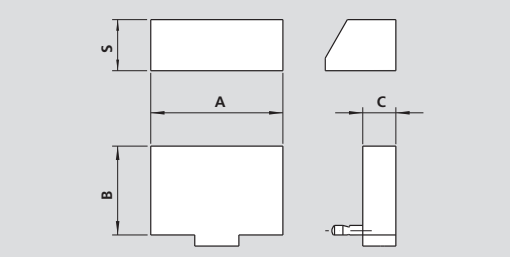

Consisting of:
Pair of soft clamping inserts
in steel,
with jaw quick change
„CLAK-System“

Type	Id. No.	A [mm]	B [mm]	C [mm]	S [mm]	Weight [kg]
CV 60	58419649	60	40	15	23	0.58
CV 90	58429649	90	45	20	25	1.2

SinterGrip clamping jaw

CV-560

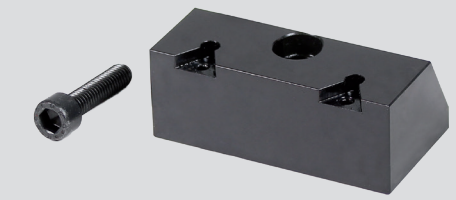

CV-590

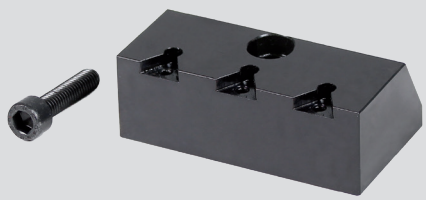

Consisting of:
Jaw and mounting screw,
without SinterGrip inserts

SinterGrip
Page 116

Type	Id. No.
CV-S 60	58460469
CV-S 90	58460499

Workstop

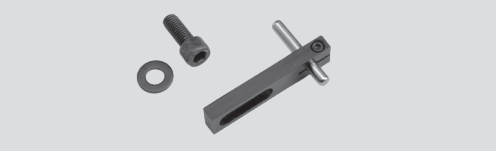

Type	Id. No.	
CV 38 / 60	58315010	for fixed support
CV 90	58325010	for fixed support
CV 38 / 60 / 90	58315020	for movable support

Pair of clamps

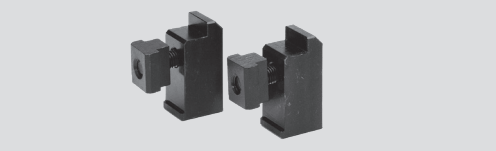

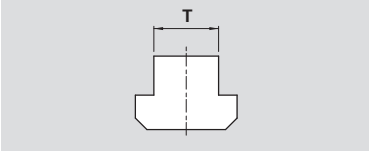

Consisting of:
Pair of clamps
complete with screw and T-nut

Type	Id. No.					
T	12 mm	14 mm	16 mm	18 mm	20 mm	22 mm
CV 38 / 60	58012792	58012793	58012794	58012795	58012796	58012797
CV 90	58022792	58022793	58022794	58022795	58022796	58022797

Pair of standard positioning keys

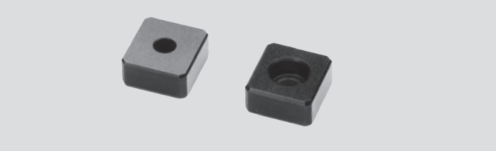

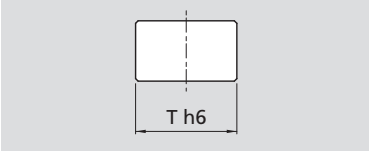

Type	Id. No.	T h6 mm
CV 38 / 60 / 90	58011592	12

Pair of special positioning keys with special dimensions

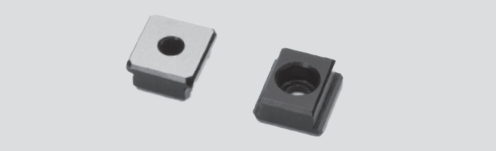

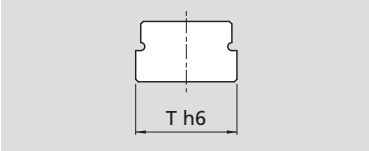

Type	Id. No.					
Th6	12 mm - h6	14 mm - h6	16 mm - h6	18 mm - h6	20 mm - h6	22 mm - h6
CV 38 / 60 / 90	-	58011593	58011594	58011595	58011596	58011597

CV-VCS

Multiple clamping system

■ Steel cross tombstone

Application/customer benefits

- Steel cross tombstone ready to use on hirozontal machining centres
- Easy mounting of the multiple clamping system CV / CV-S
- Best use of the machine table

Technical Features

- Prepared to mount of 4 multiple clamping devices CV / CV-S
- Interface for JIS pallets and for zero point clamping systems APS / WPS / ZeroAct

Standard equipment

Tombstone

Technical data

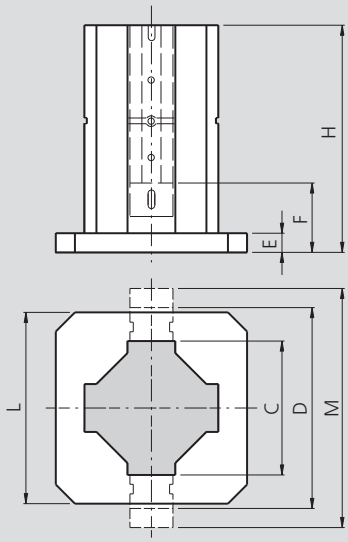

Subject to technical changes.

	Type	Id. No.	C [mm]	D [mm]	E [mm]	F [mm]	H [mm]	L [mm]	M [mm]	Weight [kg]
Steel	CV-VCS 38/60-400	58418011	250	370	40	120	460	400	450	110
	CV-VCS 38/60-500	58418021	250	370			560	400	450	123
	CV-VCS 38/60-500	58418022	300	420			560	500	500	165
	CV-VCS 38/60-630	58418031	250	370			690	400	450	142
	CV-VCS 38/60-630	58418032	300	420			690	500	500	187
	CV-VCS 38/60-630	58418033	380	500			690	630	580	261
	CV-VCS 90-400	58428011	250	390	40	130	460	400	480	110
	CV-VCS 90-500	58428021	250	390			560	400	480	123
	CV-VCS 90-500	58428022	300	440			560	500	530	165
	CV-VCS 90-630	58428031	250	390			690	400	480	142
	CV-VCS 90-630	58428032	300	440			690	500	530	187
	CV-VCS 90-630	58428033	380	520			690	630	610	261
Aluminium	CV-VCS 38/60-630	58427931	250	370	40	120	690	400	450	66
	CV-VCS 38/60-630	58427932	250	370			690	500	450	76
	CV-VCS 38/60-630	58427933	250	500			690	630	580	122
	CV-VCS 90-630	58427931	250	390	40	130	690	400	480	66
	CV-VCS 90-630	58427932	250	390			690	500	480	76
	CV-VCS 90-630	58427933	250	520			690	630	610	122

Multiple clamping system

CV-CN

- Serration 2.5 x 60°
- Quick change system „CLAK-System“ optional available

Application/customer benefits

- Full usability on CNC indexing tables
- Compact design
- Modular system: Extensive range of accessories
- Quick change system „CLAK-System“ for jaws and parallel claks optional available (see page 229)
- Maximum efficiency due to quick change over
- Can be used for single or multiclamp

Technical features

- Serration 2.5 x 60°
- Jaw width 38 mm, 60 mm und 90 mm,
  Length 250 mm, 400 mm, 500 mm and 630 mm
- Optional: Special interface flanges for CNC indexing tables and special adaptation for end supports / tailstocks

Standard equipment

1 column, 4 fixed jaws, 1 blank flange, 1 interface plate for end supports / tailstocks, 1 clamping wrench, 4 workstops

Technical data

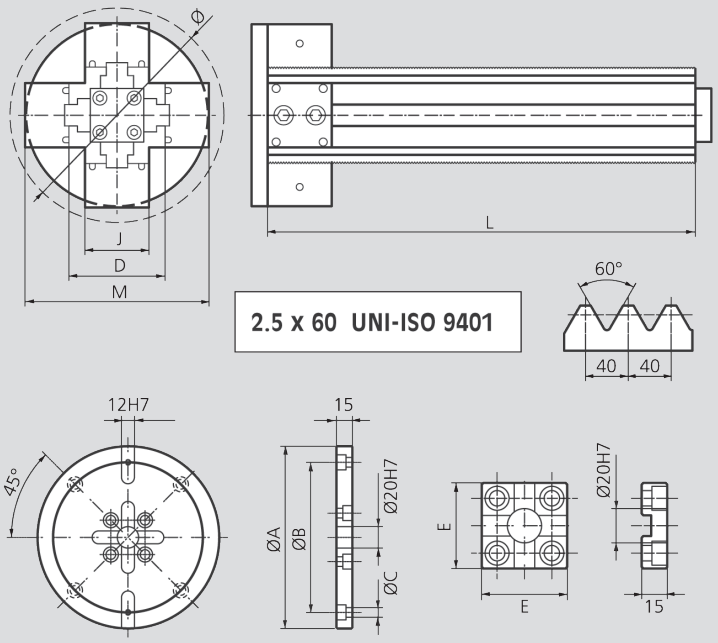

Subject to technical changes.

Type	Id. No.	J [mm]	D [mm]	M [mm]	L [mm]	Ø rot. [mm]	Ø A [mm]	Ø B [mm]	Ø C [mm]	E [mm]	Weight [kg]
CV-CN 60-400	77584111				400						19
CV-CN 60-500	77584112	60	90	170	500	200	170	140	9	50	23
CV-CN 60-630	77584113				630						29
CV-CN 90-400	77584211				400						34
CV-CN 90-500	77584212	90	115	205	500	230	210	180	11	70	41
CV-CN 90-630	77584213				630						50

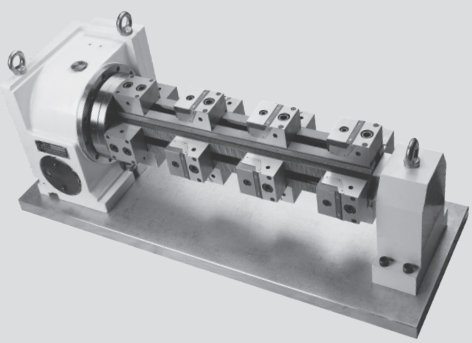

TB

Multiple clamping equipment

■ Serration 2.0 x 60°
■ Excellent price / performance ratio

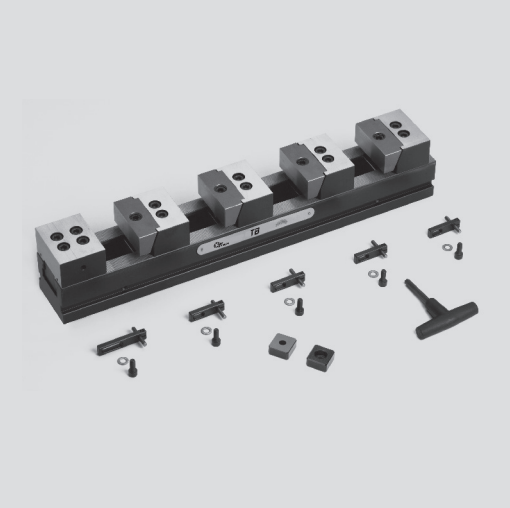

Application/customer benefits

- Full usability of the machine table
- Modular system: Extensive range of accessories
- Maximum efficiency due to quick change over
- Can be used for single or multiclamp
- Set with 4 clamping positions

Technical features

- Serration 2.0 x 60°

Standard equipment

Multible clamping system set:
1 Base (different sizes)
1 Fix jaw
4 Movable jaws
4 Workstops
1 Clamping wrench

Technical data

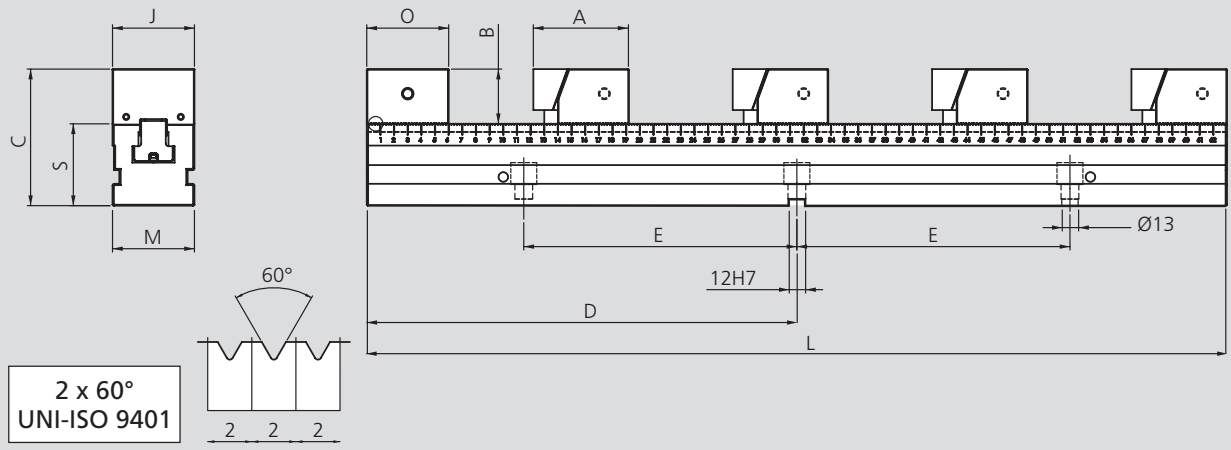

Subject to technical changes.

Type	Id. No.	A [mm]	B [mm]	C [mm]	D [mm]	E [mm]	J [mm]	L [mm]	M [mm]	O [mm]	S ±0.01 [mm]	Weight [kg]
TB 60-400	77588101				200	100		400				16.9
TB 60-500	77588102	70	40	100	250	150	60	500	60	60	60	18.9
TB 60-630	77588103				315	200		630				22.0
TB 90-400	77588201				200	100		400				27.6
TB 90-500	77588202	80	45	115	250	150	90	500	90	70	70	32.8
TB 90-630	77588203				315	200		630				36.7

Multiple clamping equipment

TB

- Serration 2.0 x 60°
- Excellent price / performance ratio

Clamping force diagrams

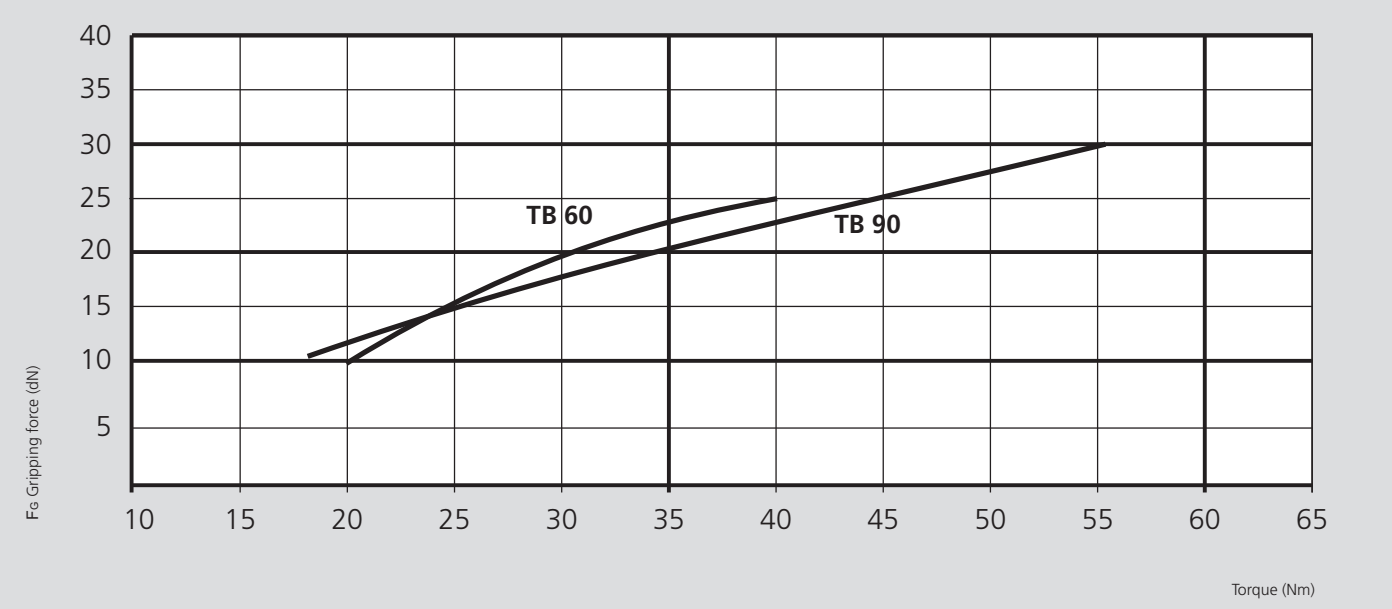

Clamping capacity

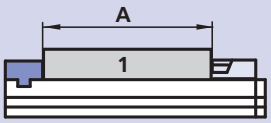

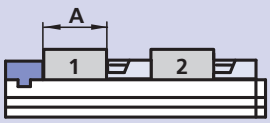

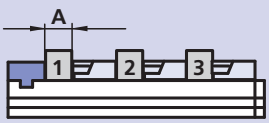

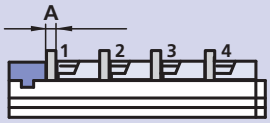

Type	A max. [mm]			
TB 60-400	270	100	43	15
TB 60-500	370	150	76	40
TB 60-630	500	215	120	73
TB 90-400	249	84	29	-
TB 90-500	349	134	62	26
TB 90-630	479	199	106	59

4 pairs of TB parallels, set

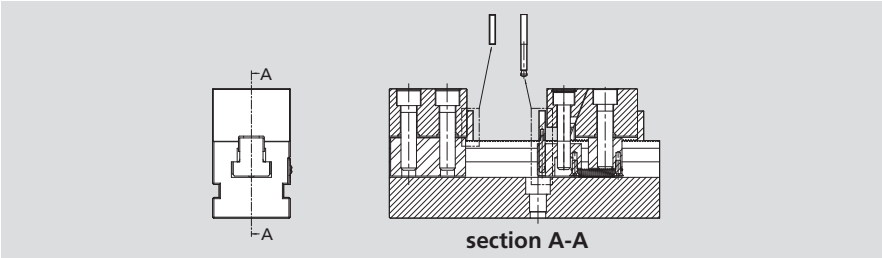

Type	Id. No.	Weight [kg]
TB 60	58819204	0.4
TB 90	58829204	0.7

Pair of TB parallels

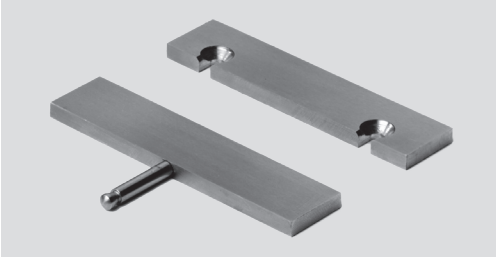

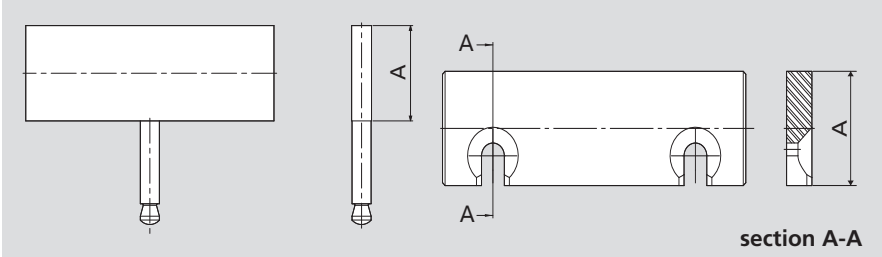

Type	Id. No.	A [mm]
TB 60	58813518	18
TB 60	58813523	23
TB 60	58813528	28
TB 60	58813537	37
TB 90	58823518	18
TB 90	58823523	23
TB 90	58823533	33
TB 90	58823542	42

Pair of T-nuts

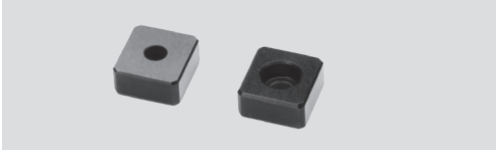

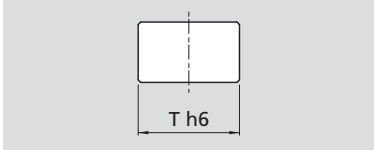

Type	Id. No.	T h6 [mm]
TB 60 / 90	58011592	12

Pair of T-nuts with special dimensions

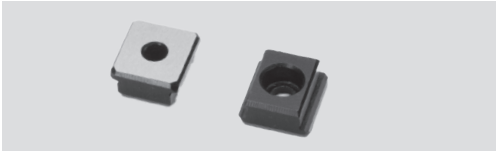

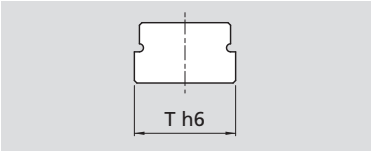

Type	Id. No.					
Th6	12 mm - h6	14 mm - h6	16 mm - h6	18 mm - h6	20 mm - h6	22 mm - h6
TB 60 / 90	-	58011593	58011594	58011595	58011596	58011597

Fix jaws, set

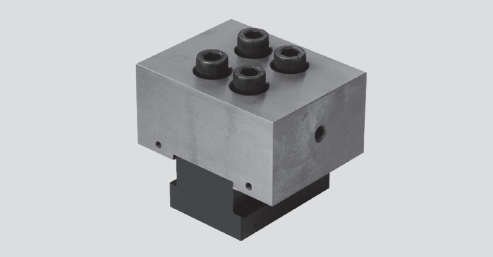

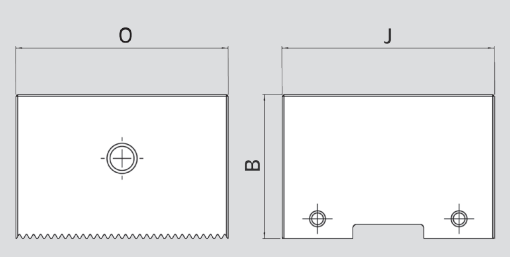

Type	Id. No.	B [mm]	J [mm]	O [mm]	Weight [kg]
TB 60	58817220	40	60	70	1.3
TB 90	58827220	45	90	80	2.8

Adjustable jaws with pull down, smooth, set

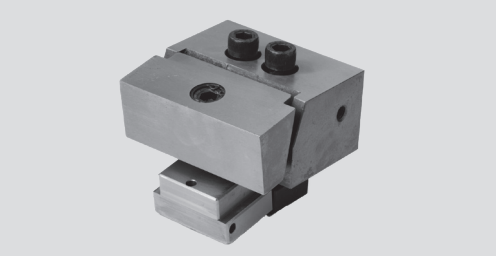

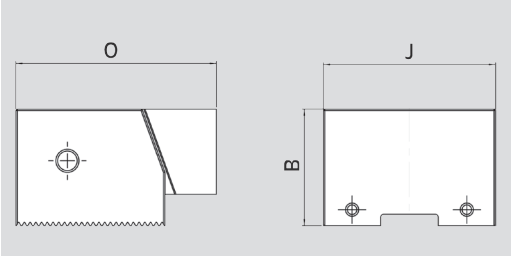

Type	Id. No.	B [mm]	J [mm]	O [mm]	Weight [kg]
TB 60	77588123	40	60	70	1.4
TB 90	77588223	45	90	80	3

Clamping insert, smooth

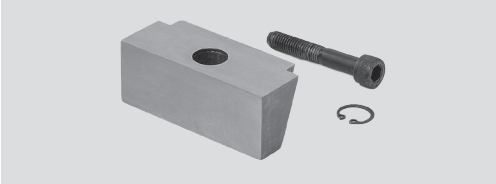

Type	Id. No.
TB 60	58810409
TB 90	58820409

Workstop

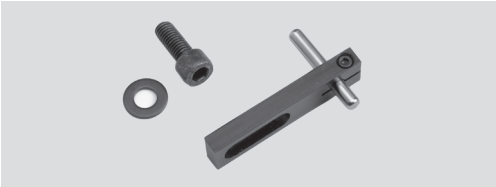

Type	Id. No.
TB 60	58315010 fixed
TB 90	58325010 fixed
TB 60 / 90	58315020 movable

Pair of clamps, incl. T-nut and clamping screw

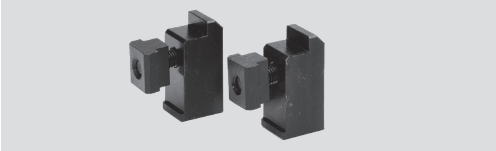

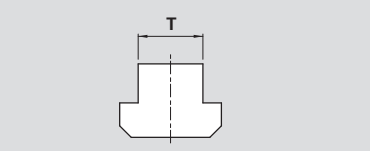

Type	Id. No.					
	12 mm	14 mm	16 mm	18 mm	20 mm	22 mm
TB 60	58012792	58012793	58012794	58012795	58012796	58012797
TB 90	58022792	58022793	58022794	58022795	58022796	58022797

Improved absorption of the transverse forces

CV multiple clamping system

Serration 2.5 x 60°

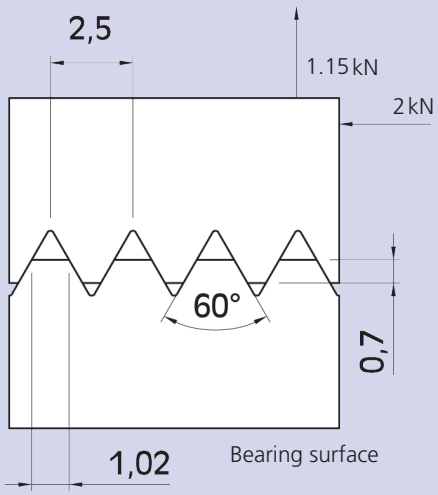

TB multiple clamping system

Serration 2.0 x 60°

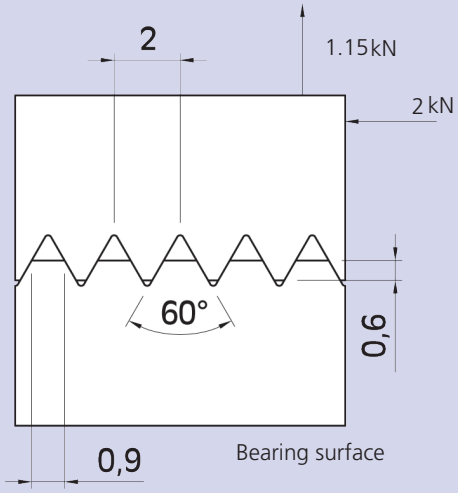

Competitor

Serration 1.5 x 90°

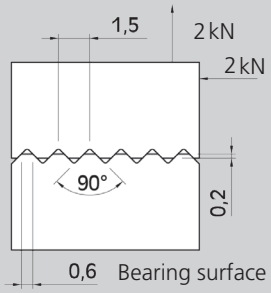

Serration 2.0 x 90°

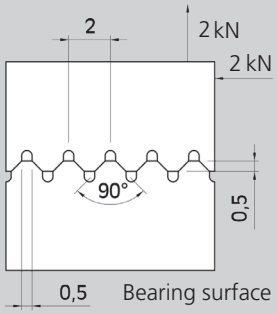

Serration 2.0 x 90°

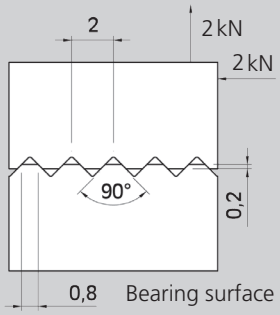

Notes

Customized tombstones – shortest delivery times

The intelligently designed modular system of the **RT tombstones** offers an extended product range with the shortest possible delivery times. The tombstones can also be individually equipped with a wide variety of stationary clamping systems and delivered ready for operation. Suitable geometries offer optimum accessibility to the machine spindle with the highest accuracy and precision.
The **RT tombstones** are available in steel (hardened steel if required), cast iron or aluminium version and offer maximum rigidity and excellent vibration damping. The clamping areas are pre-milled, fine milled or provided with a grid bore holes, depending on the customer's requirements. In addition to the extensive catalogue, special sizes with short delivery times are also available upon request.
The **RT tombstones** are suitable for standard machines according to DIN 55201 or JIS 6337-1980.

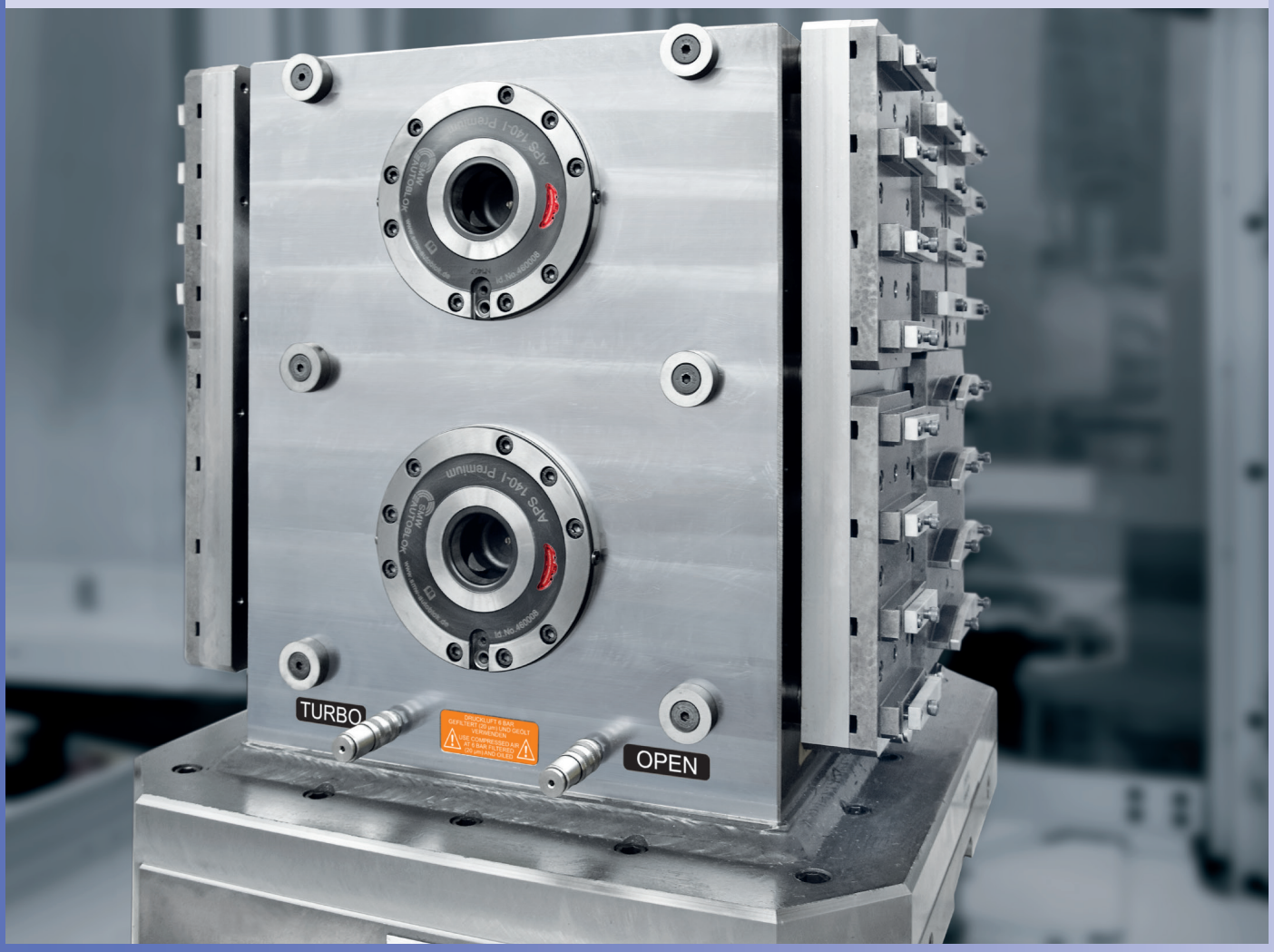

Tombstones

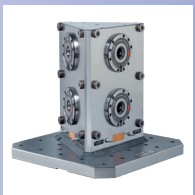

Page 242

RT

Tombstones, angle plates, plates and subplates

- Modular system: Wide range of standard products and shortest delivery times
- Highest stiffness and anti-vibration design
- Best accessibility of the machine spindle to the workpiece
- Highest accuracy and precision

RT

Tombstones

- Modular system
- Highest accuracy and precision

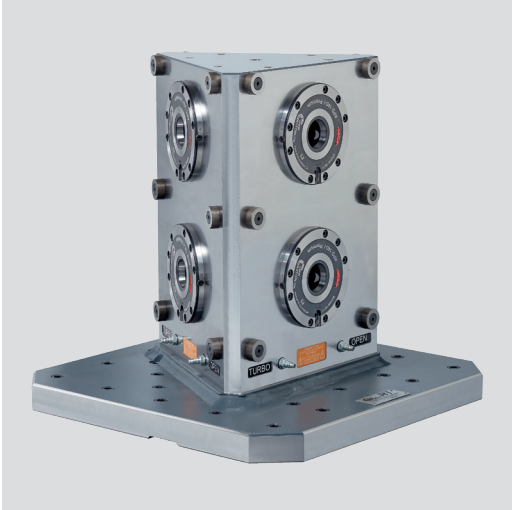

Application/customer benefits

- Modular system: Wide range of standard products and shortest delivery times
- Highest stiffness and anti-vibration design
- Optimal accessibility of the machine spindle to the workpiece
- Highest accuracy and precision
- High quality thread insert bushes used for grid versions

Technical features

- Steel (optional hardened), aluminium or cast iron
- Suitable for standard machine pallets type DIN 55201 and JIS 6337-1980
- Raw, milled with / without grid bore holes
- Special sizes on request

Overview

Product picture	Description	Page
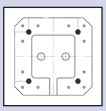	Dimensions of standard adaptation for machine tools pallet	243
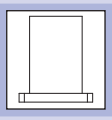	Manufacturing tolerances	243
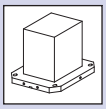	Tombstones square	245
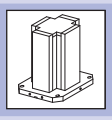	Tombstones cross	248
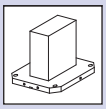	Tombstones rectangle	250
	Tombstones triangle	253
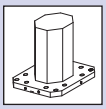	Tombstones octagon	254
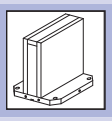	Crankwebs	256
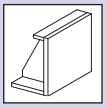	Angle plates	260
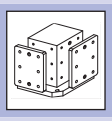	Plates	261
	Subplates	263

- Dimensions of standard adaptation
- Manufacturing tolerances

Dimensions of standard adaptation for machine tool pallets

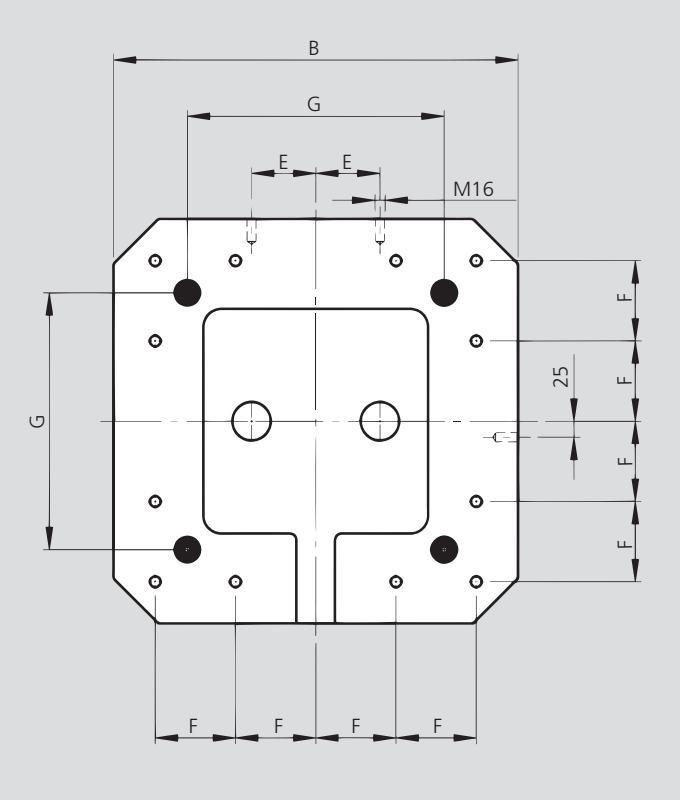

B [mm]	E [mm]	F [mm]	G [mm]
300	on request	on request	on request
400	55	80	250
500	75	100	250
630	100	125	420
800	135	160	420

Manufacturing tolerances

Subject to technical changes.

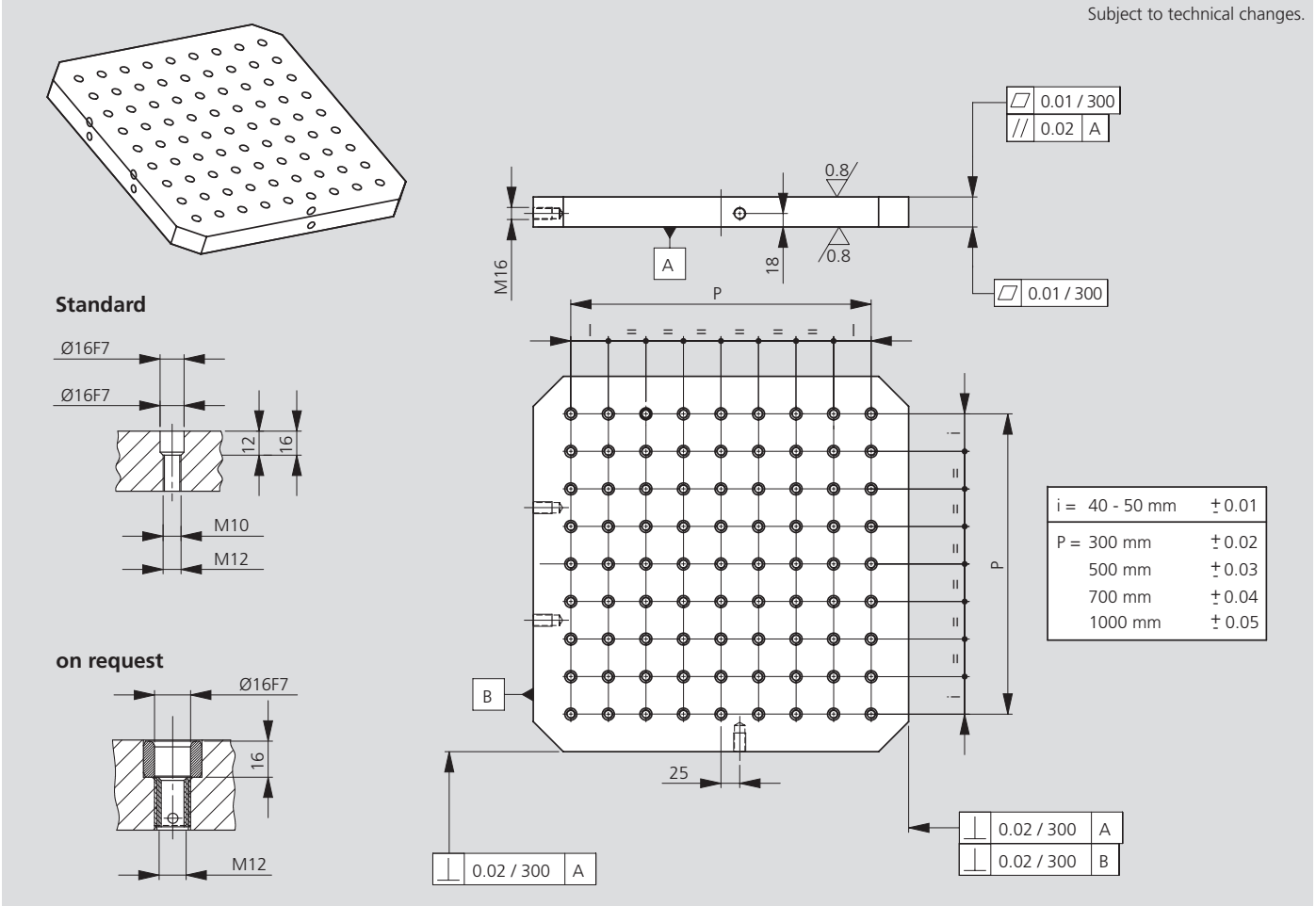

Tombstones milled

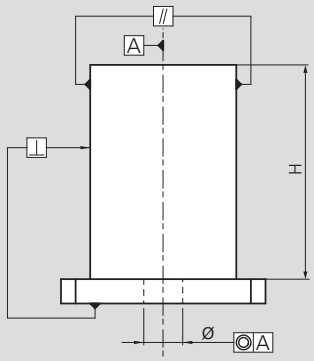

H	⊥	//	◎
500 mm	0.020	0.020	0.020
1000 mm	0.035	0.035	0.035

Subject to technical changes.

Tombstones with grid bore holes for plates

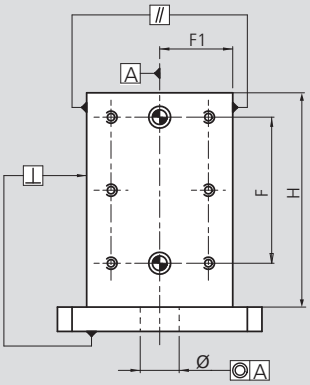

H	⊥	//	◎
500 mm	0.020	0.020	0.020
1000 mm	0.035	0.035	0.035

F=	300 mm	± 0.02
	500 mm	± 0.03
	700 mm	± 0.04
F1=	500 mm	± 0.015
	1000 mm	± 0.025

Subject to technical changes.

Tombstones with grid bore holes

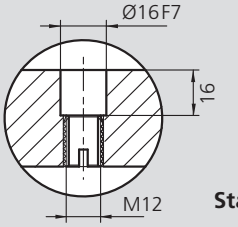

Standard for cast iron

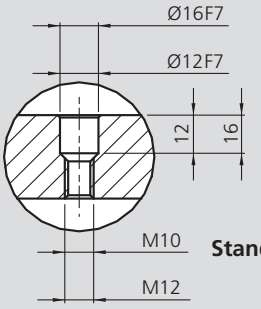

Standard steel and aluminium

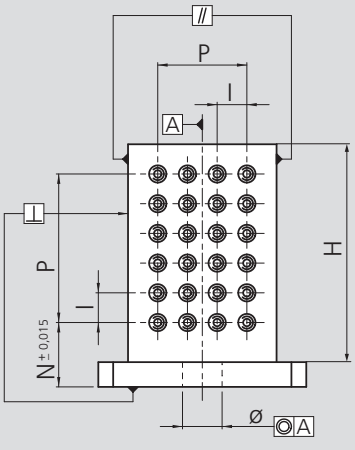

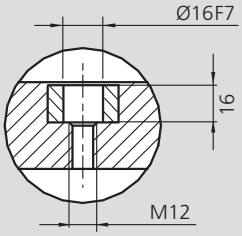

H	⊥	//	◎
500 mm	0.020	0.020	0.020
1000 mm	0.035	0.035	0.035

Further grid version for aluminium with steel sleeve insert

i =	40 - 50 mm	± 0.01
P =	300 mm	± 0.02
	500 mm	± 0.03
	700 mm	± 0.04
	1000 mm	± 0.05

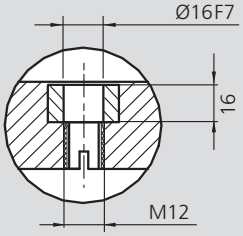

Further grid version for cast iron with steel sleeve and thread insert

Subject to technical changes.

Tombstones square

RT

- Steel, aluminium or cast iron
- Raw or milled

Subject to technical changes.

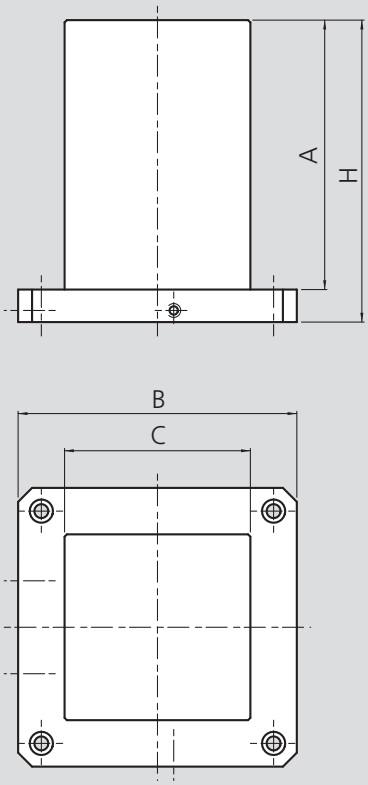

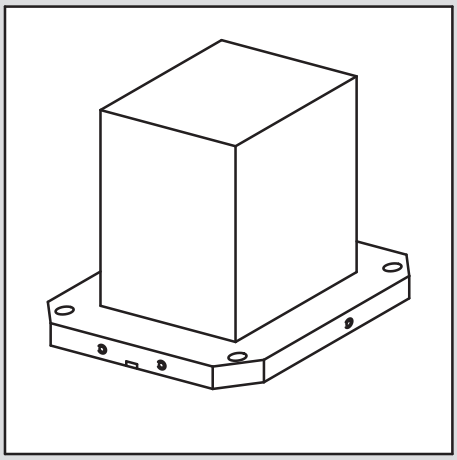

Tombstones square – STEEL

Raw Id. No.	Milled Id. No.	A [mm]	B [mm]	C [mm]	H [mm]	Weight [kg]
57006006	57006005	415	300	160	455	81
57006036	57006035	620	400	250	660	205
57006056	57006055	660	500	350	700	318
57006091	57006090	815	630	450	860	524
57006121	57006120	945	800	550	1000	795

Tombstones square – ALUMINIUM

Id. No.	A [mm]	B [mm]	C [mm]	H [mm]	Weight [kg]
57306035	620	400	250	660	80
57306055	660	500	350	700	137
57306090	815	630	450	860	253

Tombstones square – CAST IRON

Raw Id. No.	Milled Id. No.	A [mm]	B [mm]	C [mm]	H [mm]	Weight [kg]
57406036	57406035	615	400	250	660	208
57406056	57406055	655	500	350	700	329
57406091	57406090	810	630	450	860	607
57406121	57406120	945	800	550	1000	808

Special sizes on request.

RT

Tombstones square

- Steel, aluminium or cast iron
- With grid bore holes for plates

Subject to technical changes.

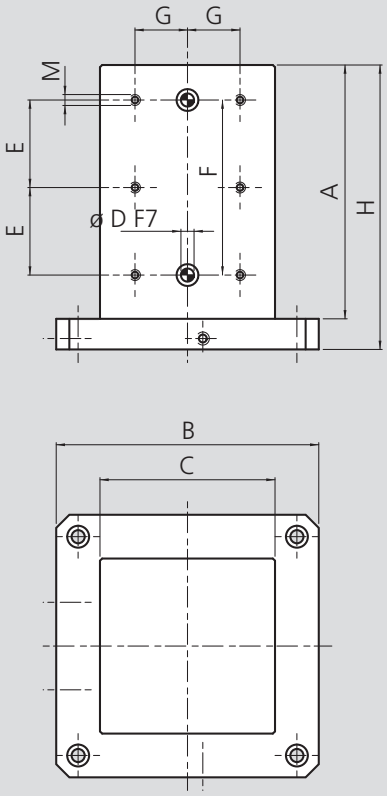

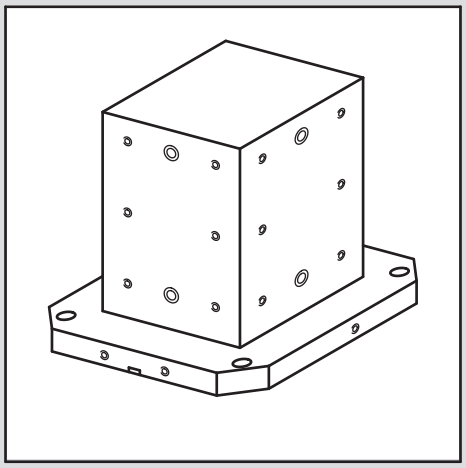

Tombstones square – STEEL

Id. No.	A [mm]	B [mm]	C [mm]	H [mm]	Ø D [mm]	M	E [mm]	F [mm]	G [mm]	Weight [kg]
57020015	415	300	160	455	12	M10	150	300	40	81
57020045	620	400	250	660	16	M12	250	500	75	205
57020065	660	500	350	700	16	M12	250	500	125	318
57020100	815	630	450	860	16	M12	350	700	175	524
57020130	945	800	550	1000	16	M12	400	800	225	795

Tombstones square – ALUMINIUM

Id. No.	A [mm]	B [mm]	C [mm]	H [mm]	Ø D [mm]	M	E [mm]	F [mm]	G [mm]	Weight [kg]
57312045	620	400	250	660	16	M12	250	500	75	80
57312065	660	500	350	700	16	M12	250	500	125	137
57312100	815	630	450	860	16	M12	350	700	175	253

Tombstones square – CAST IRON

Id. No.	A [mm]	B [mm]	C [mm]	H [mm]	Ø D [mm]	M	E [mm]	F [mm]	G [mm]	Weight [kg]
57412045	615	400	250	660	16	M12	250	500	75	208
57412065	655	500	350	700	16	M12	250	500	125	329
57412100	810	630	450	860	16	M12	350	700	175	607
57412130	945	800	550	1000	16	M12	400	800	225	808

Special sizes on request.

Tombstones square

RT

- Steel, aluminium or cast iron
- With grid bore holes for plates

Subject to technical changes.

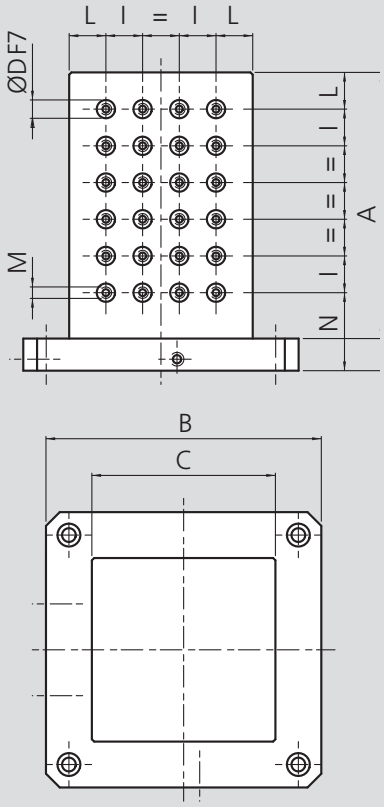

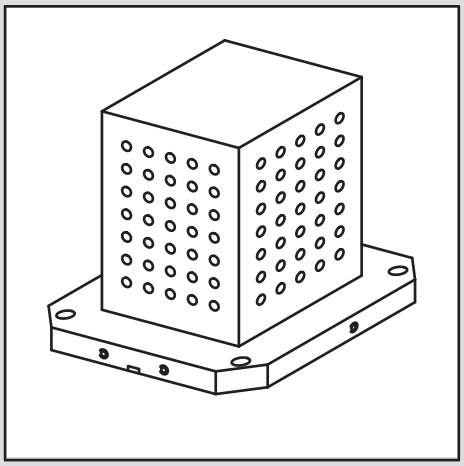

Tombstones square – STEEL

Id. No.	A [mm]	B [mm]	C [mm]	H [mm]	Ø D [mm]	M	I [mm]	L [mm]	N [mm]	Weight [kg]
57030015	415	300	160	455	12	M10	40	40	95	79
57030045	620	400	250	660	16	M12	50	50	110	198
57030065	660	500	350	700	16	M12	50	50	100	307
57030100	815	630	450	860	16	M12	50	50	110	506
57030130	945	800	550	1000	16	M12	50	50	100	768

Tombstones square – ALUMINIUM

Id. No.	A [mm]	B [mm]	C [mm]	H [mm]	Ø D [mm]	M	I [mm]	L [mm]	N [mm]	Weight [kg]
57313045	620	400	250	660	16	M12	50	50	110	78
57313065	660	500	350	700	16	M12	50	50	100	133
57313100	815	630	450	860	16	M12	50	50	110	246

Tombstones square – CAST IRON

Id. No.	A [mm]	B [mm]	C [mm]	H [mm]	Ø D [mm]	M	I [mm]	L [mm]	N [mm]	Weight [kg]
57413045	615	400	250	660	16	M12	50	50	110	208
57413065	655	500	350	700	16	M12	50	50	100	329
57413100	810	630	450	860	16	M12	50	50	110	522
57413130	945	800	550	1000	16	M12	50	50	100	808

Special sizes on request.

RT

Tombstones cross

- Steel, aluminium
- Milled

Subject to technical changes.

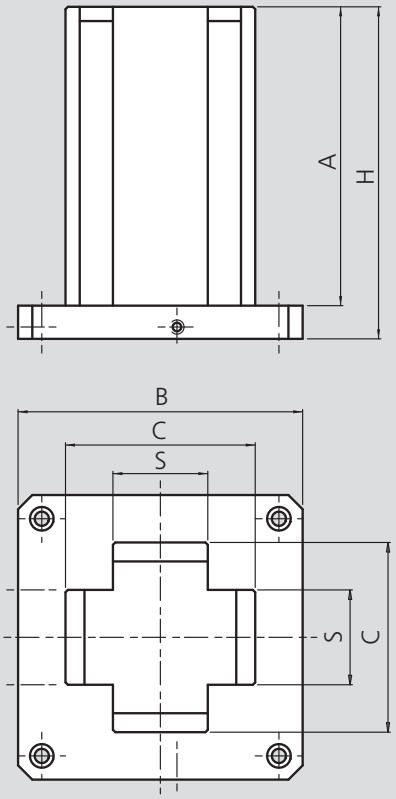

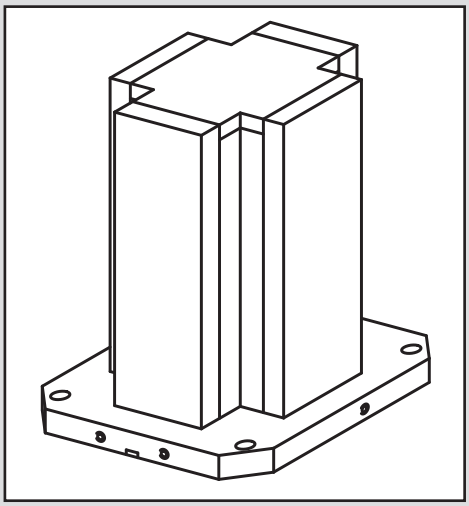

Tombstones cross – STEEL

Id. No.	A [mm]	B [mm]	C [mm]	H [mm]	S [mm]	Weight [kg]
57061010	540	400	300	580	150	208
57061015	540	500	300	580	150	236
57061020	795	630	550	840	150	451
57061025	625	500	350	670	200	296
57061030	625	630	350	670	200	356
57061035	650	400	250	690	100	142
57061040	650	500	300	690	100	187

Tombstones cross – ALUMINIUM

Id. No.	A [mm]	B [mm]	C [mm]	H [mm]	S [mm]	Weight [kg]
57316110	540	400	300	580	150	82
57316115	540	500	300	580	150	92
57316135	650	400	250	690	100	79
57316140	650	500	250	690	100	88

Special sizes on request.

Tombstones cross

RT

- Steel, aluminium
- With grid bore holes for plates

Subject to technical changes.

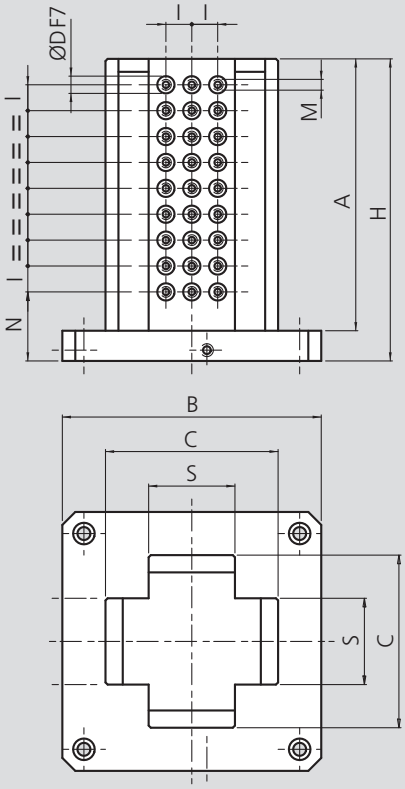

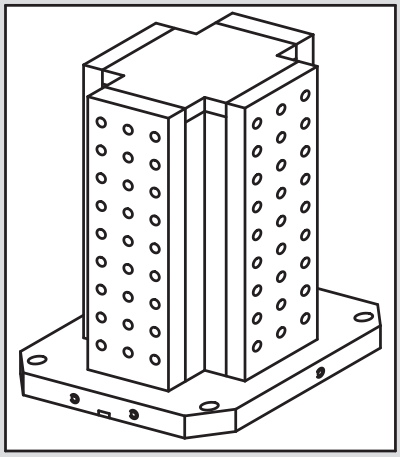

Tombstones cross – STEEL

Id. No.	A [mm]	B [mm]	C [mm]	H [mm]	Ø D [mm]	M	I [mm]	N [mm]	S [mm]	Weight [kg]
57060010	540	400	300	580	16	M12	50	85	150	208
57060015	540	500	300	580	16	M12	50	85	150	236
57060020	795	630	550	840	16	M12	50	100	150	451
57060025	625	500	350	670	16	M12	50	120	200	296
57060030	625	630	350	670	16	M12	50	120	200	356

Tombstones cross – ALUMINIUM

Id. No.	A [mm]	B [mm]	C [mm]	H [mm]	Ø D [mm]	M	I [mm]	N [mm]	S [mm]	Weight [kg]
57316010	540	400	300	580	16	M12	50	85	150	82
57316015	540	500	300	580	16	M12	50	85	150	92

Special sizes on request.

RT

Tombstones rectangle cube

■ Steel, milled

Subject to technical changes.

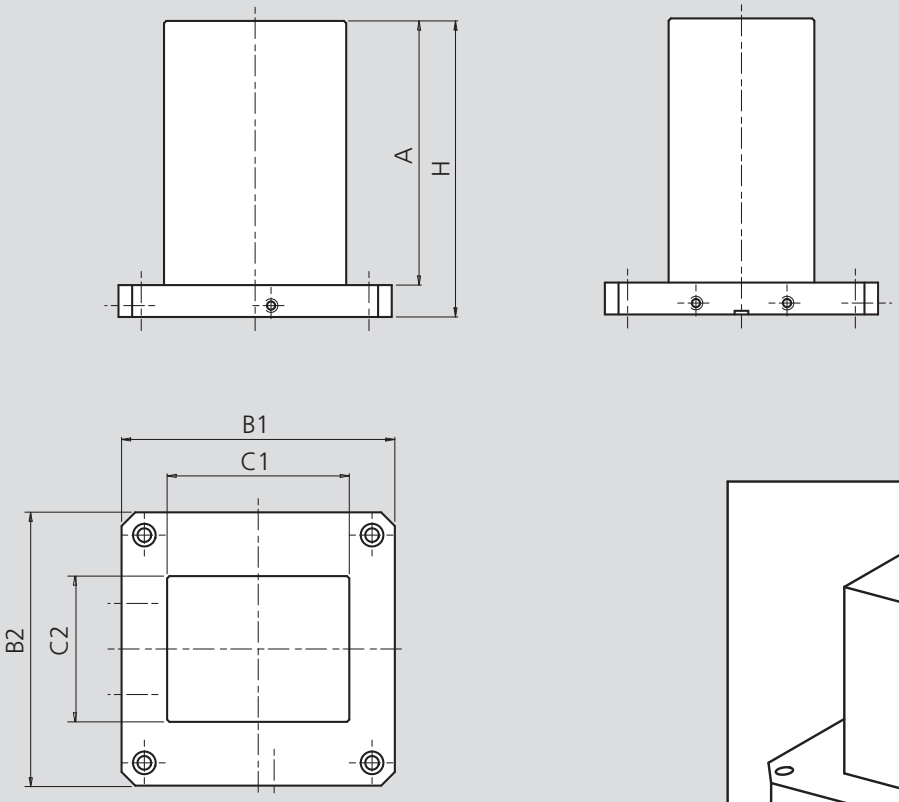

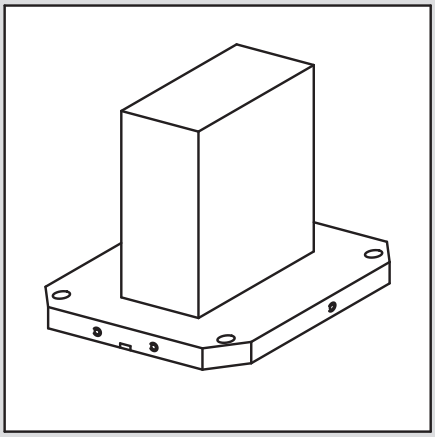

Tombstones rectangle cube – STEEL

Id. No.	A [mm]	B1 [mm]	B2 [mm]	C1 [mm]	C2 [mm]	H [mm]	Weight [kg]
57007005	615	500	400	350	250	655	250
57007010	615	500	500	350	250	655	265
57007025	615	630	500	450	350	660	367
57007030	615	630	630	450	350	660	395

Special sizes on request.

Tombstones rectangle cube

RT

- Steel
- With grid bore hole for plates

Subject to technical changes.

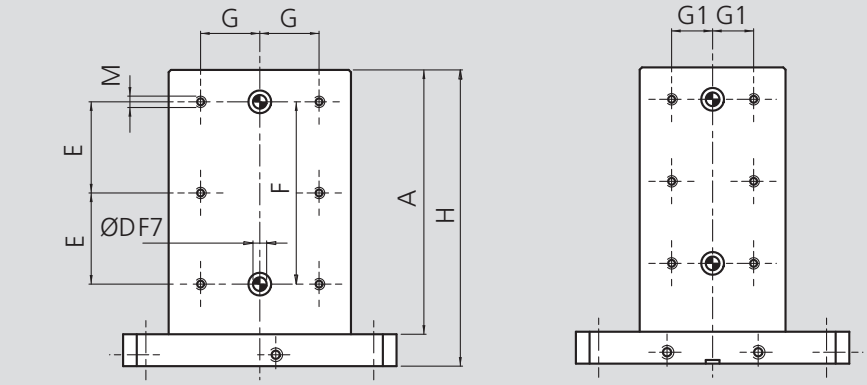

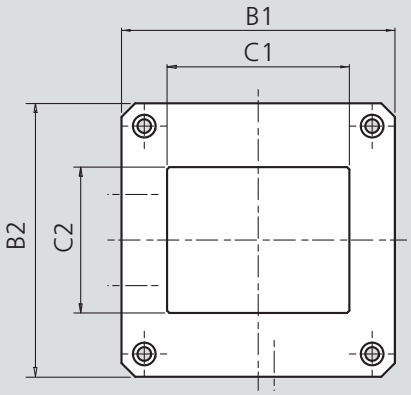

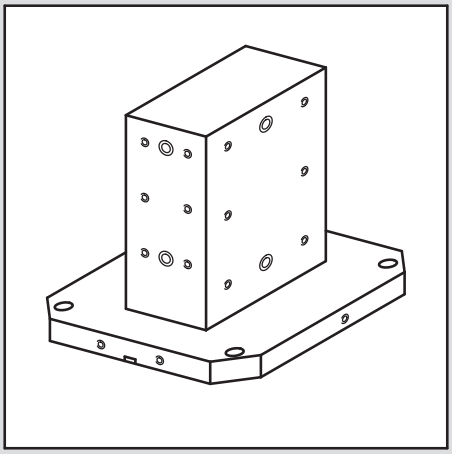

Tombstones rectangle cube – STEEL

Id. No.	A [mm]	B1 [mm]	B2 [mm]	C1 [mm]	C2 [mm]	H [mm]	Ø D [mm]	M	E [mm]	F [mm]	G [mm]	G1 [mm]	Weight [kg]
57070015	615	500	400	350	250	655	16	M12	250	500	125	75	250
57070020	615	500	500	350	250	655	16	M12	250	500	125	75	265
57070035	615	630	500	450	350	660	16	M12	250	500	175	125	367
57070040	615	630	630	450	350	660	16	M12	250	500	175	125	395

Special sizes on request.

RT

Tombstones rectangle cube

- Steel
- With grid bore hole

Subject to technical changes.

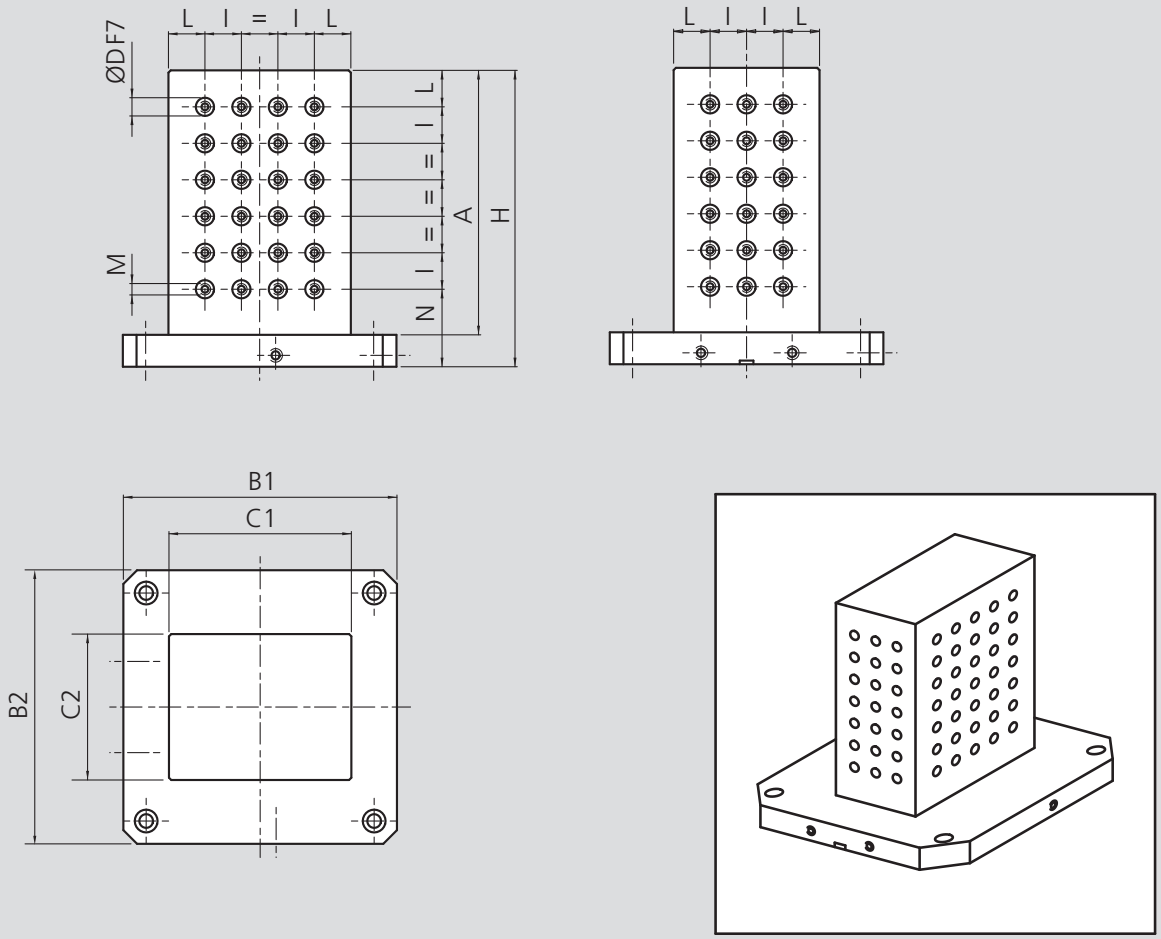

Tombstones rectangle cube – STEEL

Id. No.	A [mm]	B1 [mm]	B2 [mm]	C1 [mm]	C2 [mm]	H [mm]	Ø D [mm]	M	I [mm]	L [mm]	N [mm]	Weight [kg]
57080015	615	500	400	350	250	655	16	M12	50	50	105	242
57080020	615	500	500	350	250	655	16	M12	50	50	105	257
57080035	615	630	500	450	350	660	16	M12	50	50	110	355
57080040	615	630	630	450	350	660	16	M12	50	50	110	383

Special sizes on request.

Tombstones triangle tower

RT

- Steel
- With grid bore holes

Subject to technical changes.

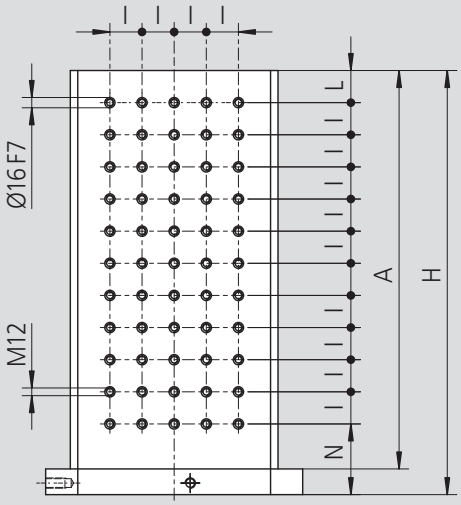

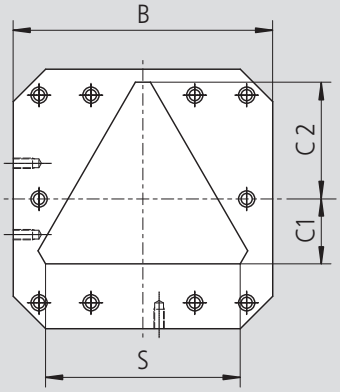

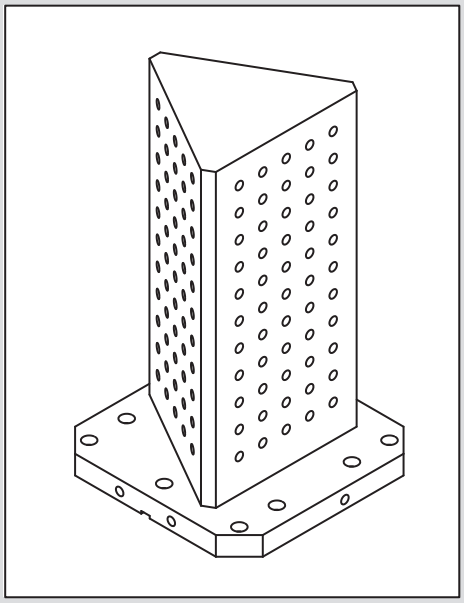

Tombstones triangle tower – STEEL

Id. No.	A [mm]	B [mm]	C1 [mm]	C2 [mm]	H [mm]	I [mm]	L [mm]	N [mm]	S [mm]	Weight [kg]
57171010	620	400	100	180	660	50	50	110	300	200
57171020	620	500	100	180	660	50	50	110	300	227

Special sizes on request.

RT

Tombstones octagon tower

- Steel or aluminium
- Milled

Subject to technical changes.

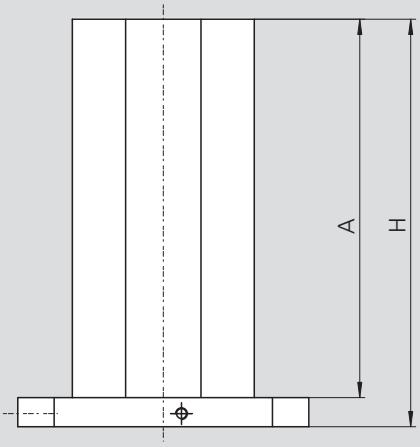

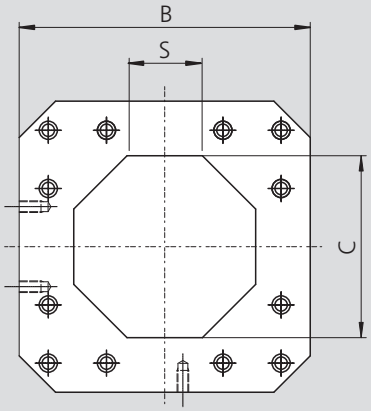

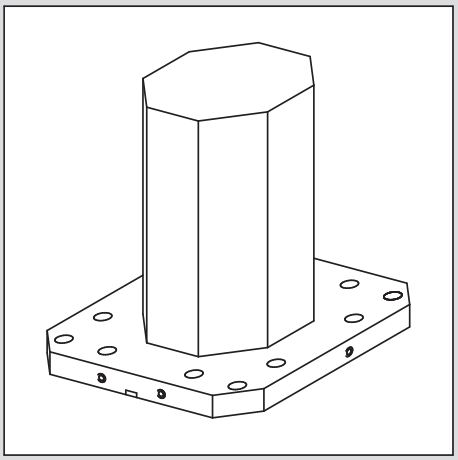

Tombstones octagon tower – STEEL

Id. No.	A [mm]	B [mm]	C [mm]	H [mm]	S [mm]	Weight [kg]
57004000	650	400	250	690	100	185
57004010	650	500	250	690	100	213
57004020	650	630	380	690	155	351

Tombstones octagon tower – ALUMINIUM

Id. No.	A [mm]	B [mm]	C [mm]	H [mm]	S [mm]	Weight [kg]
57304000	650	400	250	690	100	79
57304010	650	500	250	690	100	88
57304020	650	630	380	690	155	138

Special sizes on request.

Tombstones octagon tower

RT

- Steel and aluminium
- With grid bore holes

Subject to technical changes.

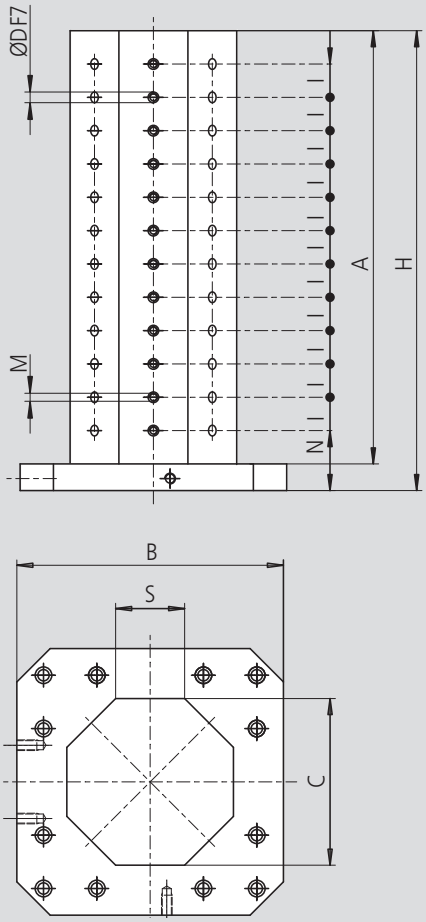

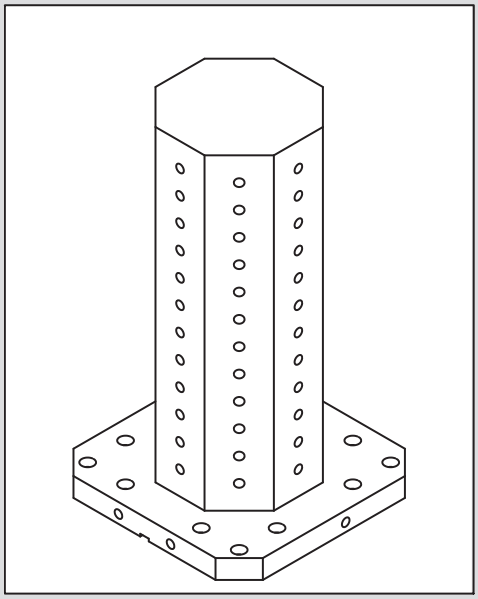

Tombstones octagon tower – STEEL

Id. No.	A [mm]	B [mm]	C [mm]	H [mm]	Ø D [mm]	M	I [mm]	N [mm]	S [mm]	Weight [kg]
57173010	650	400	250	690	16	M 12	50	90	100	181
57173020	650	500	250	690	16	M 12	50	90	100	209
57173030	650	630	380	690	16	M 12	50	90	155	339

Tombstones octagon tower – ALUMINIUM

Id. No.	A [mm]	B [mm]	C [mm]	H [mm]	Ø D [mm]	M	I [mm]	N [mm]	S [mm]	Weight [kg]
57336010	650	400	250	690	16	M 12	50	90	100	78
57336020	650	500	250	690	16	M 12	50	90	100	87
57336030	650	630	380	690	16	M 12	50	90	155	136

Special sizes on request.

RT

Crankwebs

- Steel, aluminium or cast iron
- Raw or milled

Subject to technical changes.

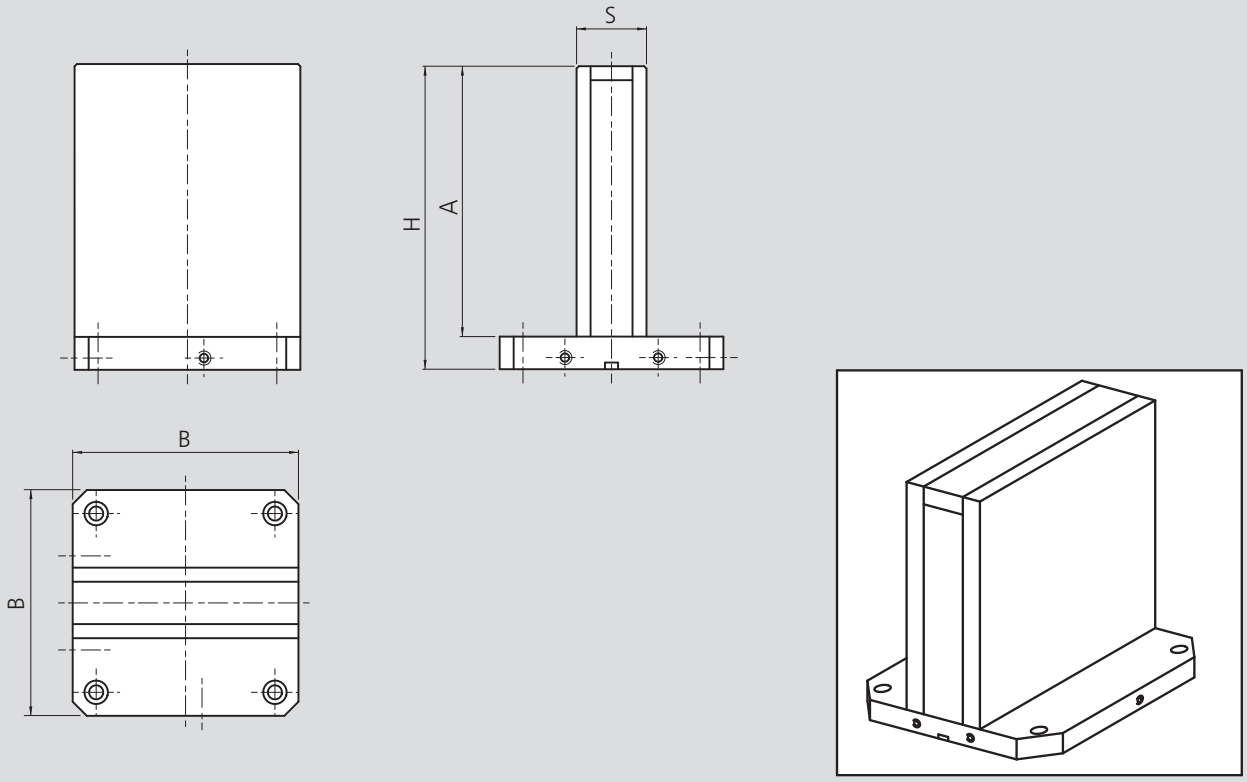

Crankweb – STEEL

Raw Id. No.	Milled Id. No.	A [mm]	B [mm]	H [mm]	S [mm]	Weight [kg]
57009026	57009025	620	400	660	150	212
57009046	57009045	660	500	700	150	287
57009066	57009065	815	630	860	200	482
57009091	57009090	945	800	1000	260	810

Crankweb – ALUMINIUM

Id. No.	A [mm]	B [mm]	H [mm]	S [mm]	Weight [kg]
57309025	620	400	660	150	77
57309045	660	500	700	150	103
57309065	815	630	860	200	172

Crankweb – CAST IRON

Raw Id. No.	Milled Id. No.	A [mm]	B [mm]	H [mm]	S [mm]	Weight [kg]
57409026	57409025	615	400	660	150	185
57409046	57409045	655	500	700	150	247
57409066	57409065	810	630	860	200	448
57409091	57409090	945	800	1000	300	810

Special sizes on request.

Crankwebs

RT

- Steel, aluminium or cast iron
- For plates

Subject to technical changes.

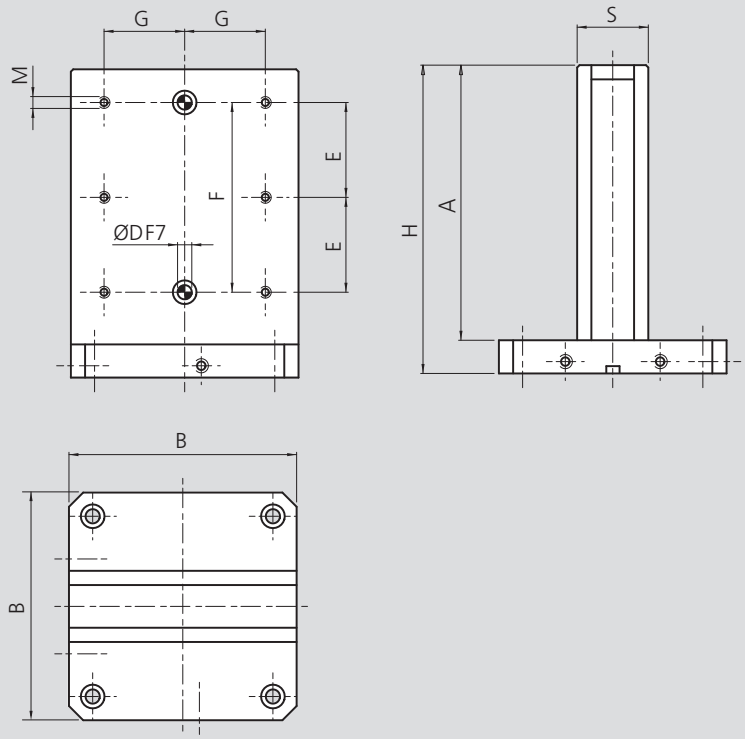

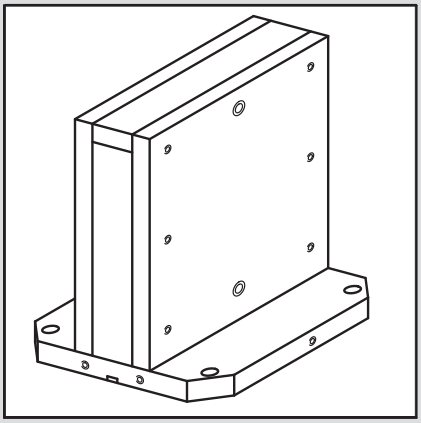

Crankweb – STEEL

Id. No.	A [mm]	B [mm]	H [mm]	Ø D [mm]	M	E [mm]	F [mm]	G [mm]	S [mm]	Weight [kg]
57041035	620	400	660	16	M 12	250	500	150	150	212
57041055	660	500	700	16	M 12	250	500	200	150	287
57041075	815	630	860	16	M 12	350	700	250	200	482
57041100	945	800	1000	16	M 12	100	800	350	260	810

Crankweb – ALUMINIUM

Id. No.	A [mm]	B [mm]	H [mm]	Ø D [mm]	M	E [mm]	F [mm]	G [mm]	S [mm]	Weight [kg]
57328035	620	400	660	16	M 12	250	500	150	150	77
57328055	660	500	700	16	M 12	250	500	200	150	103
57328075	815	630	860	16	M 12	350	700	250	200	180

Crankweb – CAST IRON

Id. No.	A [mm]	B [mm]	H [mm]	Ø D [mm]	M	E [mm]	F [mm]	G [mm]	S [mm]	Weight [kg]
57428035	615	400	660	16	M 12	250	500	150	150	185
57428055	655	500	700	16	M 12	250	500	200	150	247
57428075	810	630	860	16	M 12	350	700	250	200	448
57428100	945	800	1000	16	M 12	400	800	350	300	810

Special sizes on request.

RT

Crankwebs

- Steel, aluminium or cast iron
- With grid bore holes

Subject to technical changes.

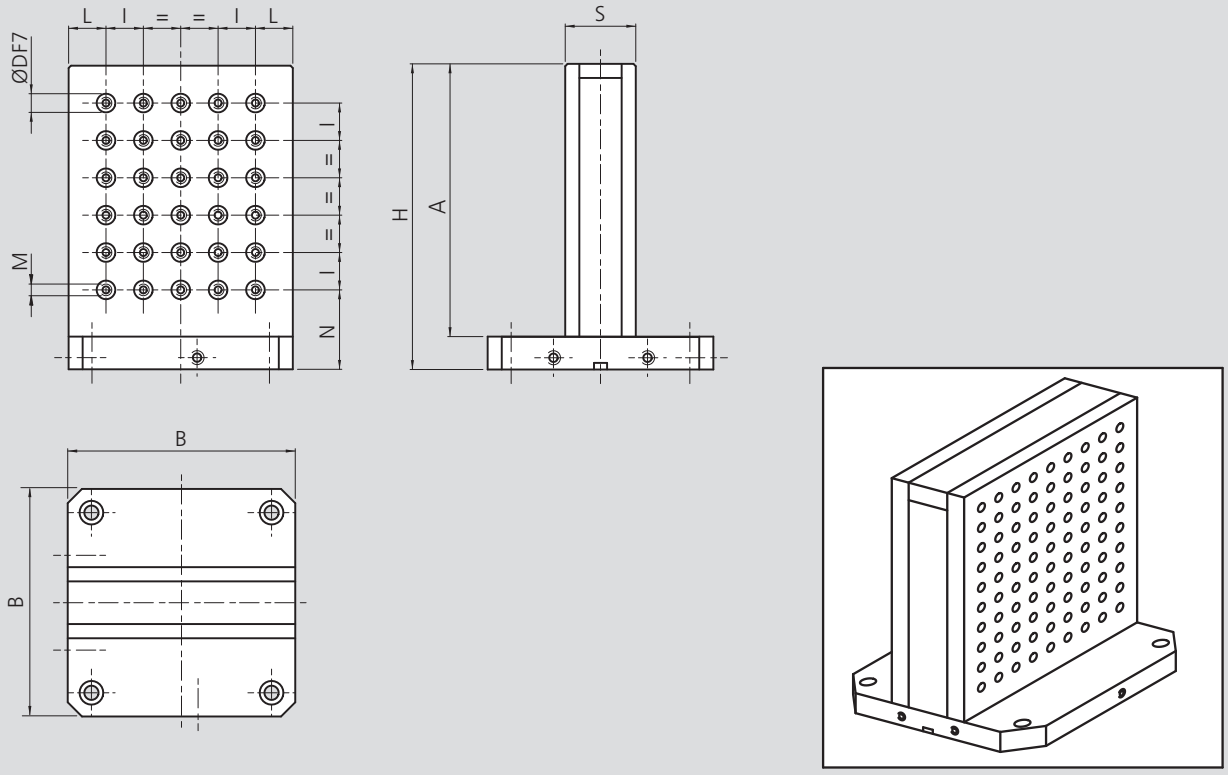

Crankweb – STEEL

Id. No.	A [mm]	B [mm]	H [mm]	Ø D [mm]	M	I [mm]	L [mm]	N [mm]	S [mm]	Weight [kg]
57040035	620	400	660	16	M 12	50	50	110	150	206
57040055	660	500	700	16	M 12	50	50	100	150	279
57040075	815	630	860	16	M 12	50	40	110	200	468
57040100	945	800	1000	16	M 12	50	50	100	260	787

Crankweb – ALUMINIUM

Id. No.	A [mm]	B [mm]	H [mm]	Ø D [mm]	M	I [mm]	L [mm]	N [mm]	S [mm]	Weight [kg]
57314035	620	400	660	16	M 12	50	50	110	150	74
57314055	660	500	700	16	M 12	50	50	100	150	100
57314075	815	630	860	16	M 12	50	40	110	200	170

Crankweb – CAST IRON

Id. No.	A [mm]	B [mm]	H [mm]	Ø D [mm]	M	I [mm]	L [mm]	N [mm]	S [mm]	Weight [kg]
57414035	615	400	660	16	M 12	50	50	110	150	180
57414055	655	500	700	16	M 12	50	50	100	150	240
57414075	810	630	860	16	M 12	50	40	110	200	440
57414100	945	800	1000	16	M 12	50	50	100	300	790

Special sizes on request.

Crankwebs

RT

- Steel and aluminium
- Made of full metal

Subject to technical changes.

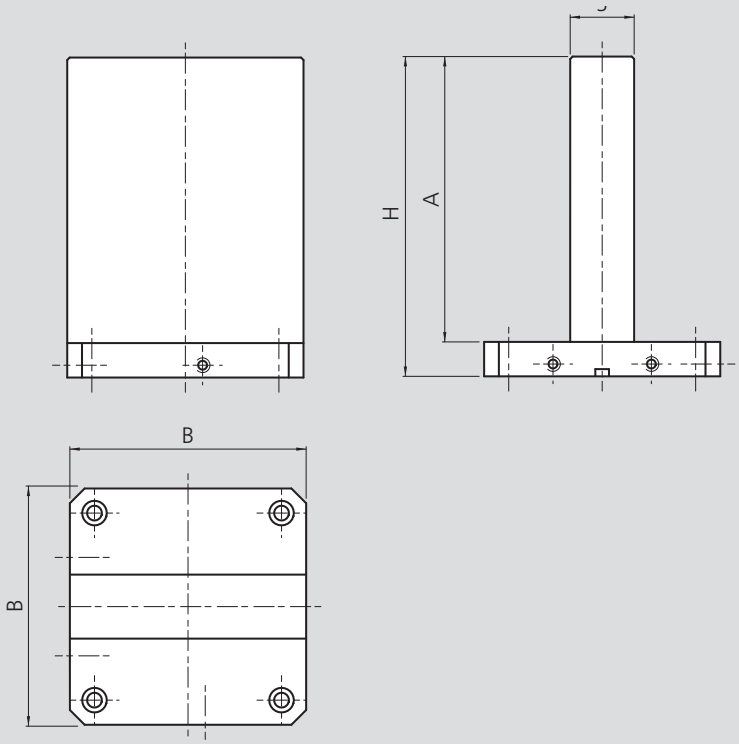

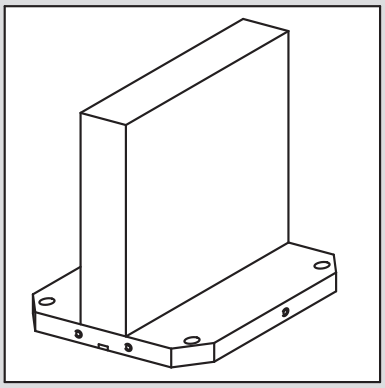

Crankweb – STEEL

Id. No.	A [mm]	B [mm]	H [mm]	S [mm]	Weight [kg]
57008030	370	320	410	80	107
57008040	480	400	520	100	201
57008050	580	500	620	100	306

Crankweb – ALUMINIUM

Id. No.	A [mm]	B [mm]	H [mm]	S [mm]	Weight [kg]
57308020	270	250	310	80	23

Special sizes on request.

RT

Angle plates

- Steel
- Milled

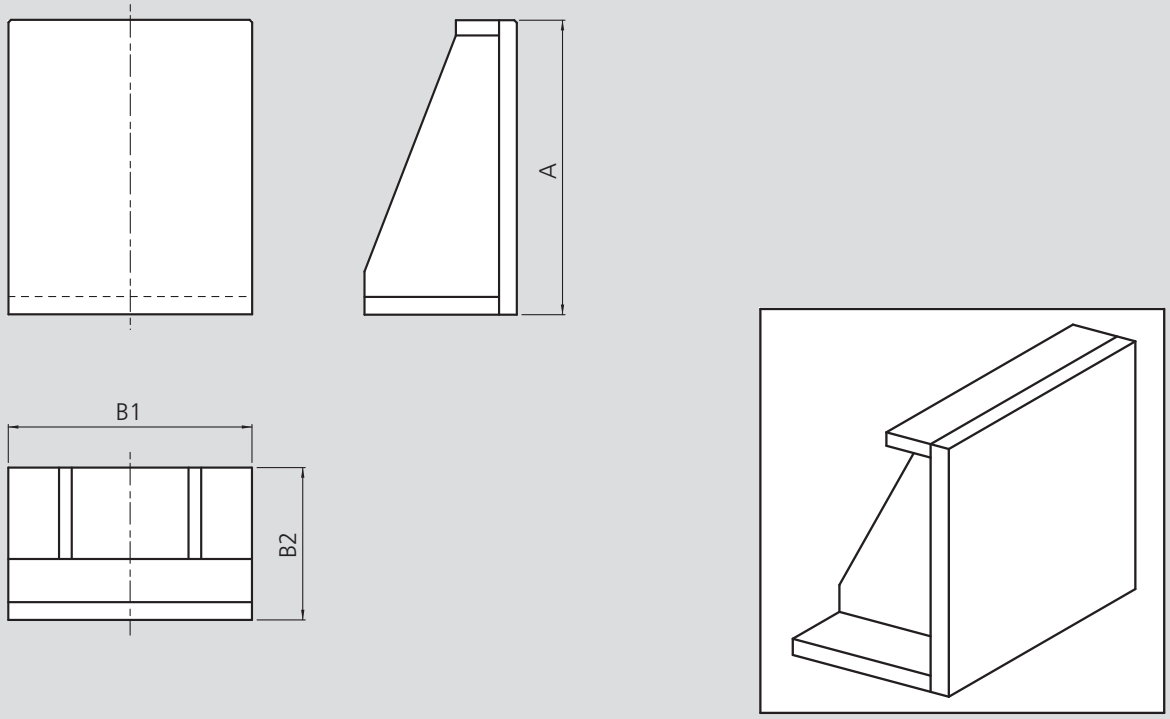

Subject to technical changes.

Angle plates – STEEL

Id. No.	A [mm]	B1 [mm]	B2 [mm]	Weight [kg]
57005030	360	320	230	66
57005040	460	400	330	130
57005050	510	400	330	139
57005060	510	500	330	182
57005070	560	500	330	196
57005080	560	630	430	305
57005090	660	630	430	343

Special sizes on request.

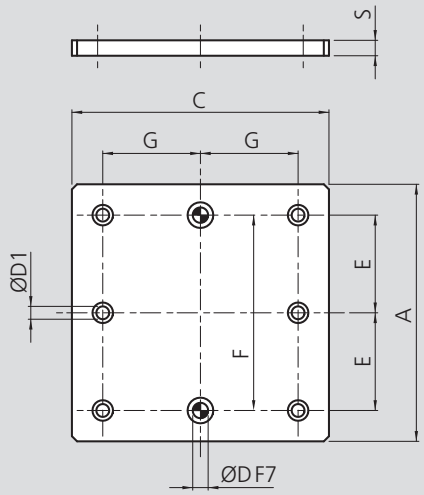

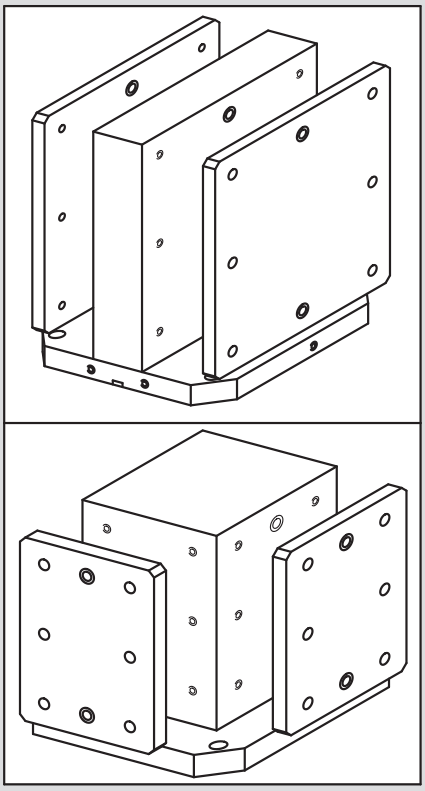

Subject to technical changes.

Plates – STEEL

Id. No.	C [mm]	A [mm]	Ø D [mm]	Ø D1 [mm]	E [mm]	F [mm]	G [mm]	S [mm]	Weight [kg]
57120025	160	400	12	11	150	300	40	20	10
57120090	250	600	16	13	250	500	75	25	29
57120130	350	600	16	13	250	500	125	25	41
57120155	400	600	16	13	250	500	150	25	47
57120175	450	800	16	13	350	700	175	25	70.5
57120195	500	600	16	13	250	500	200	25	58.5
57120210	550	800	16	13	350	700	225	25	86
57120235	630	800	16	13	350	700	250	25	98.5
57120250	800	800	16	13	350	700	350	30	149

Special sizes on request.

RT

Plates

- Steel grinded
- With grid bore holes

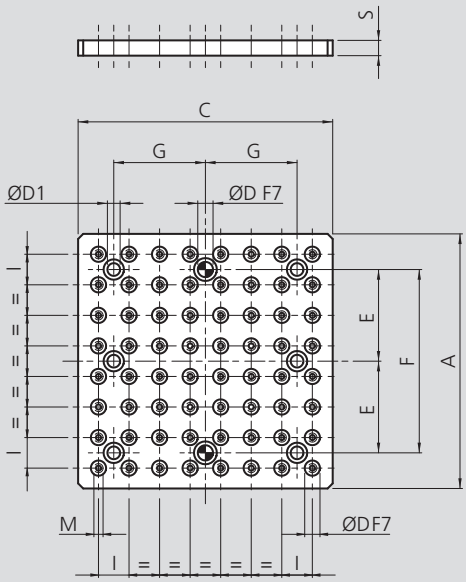

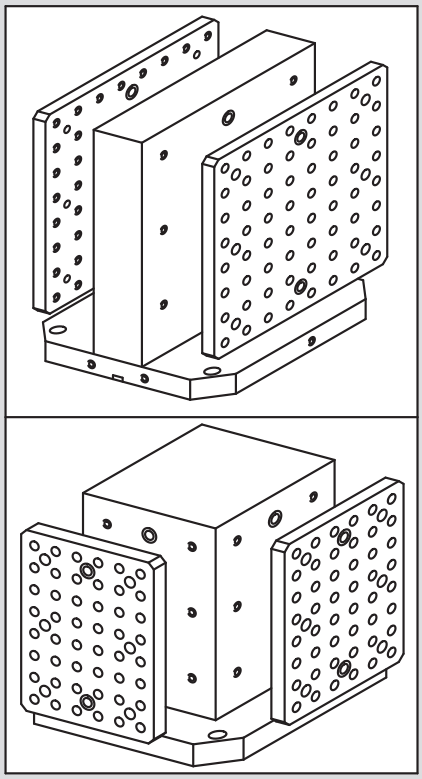

Subject to technical changes.

Grid plate – STEEL

Id. No.	C [mm]	A [mm]	Ø D [mm]	Ø D1 [mm]	M	E [mm]	F [mm]	G [mm]	I [mm]	S [mm]	Weight [kg]
57050025	160	400	12	11	M 10	150	300	40	40	30	15
57050090	250	600	16	13	M 12	250	500	75	50	35	39
57050130	350	600	16	13	M 12	250	500	125	50	35	55
57050155	400	600	16	13	M 12	250	500	150	50	35	63
57050175	450	800	16	13	M 12	350	700	175	50	35	95
57050195	500	600	16	13	M 12	250	500	200	50	35	78
57050210	550	800	16	13	M 12	350	700	225	50	35	114
57050235	630	800	16	13	M 12	350	700	250	50	35	131
57050250	800	800	16	13	M 12	350	700	350	50	35	166

Special sizes on request.

Subplates

RT

- Steel grinded
- Without grid bore holes

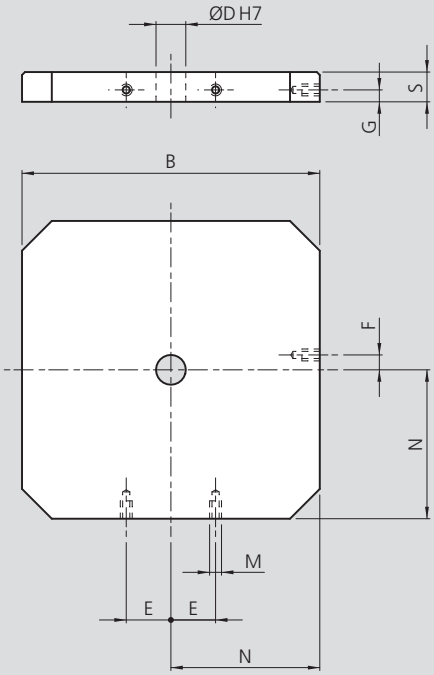

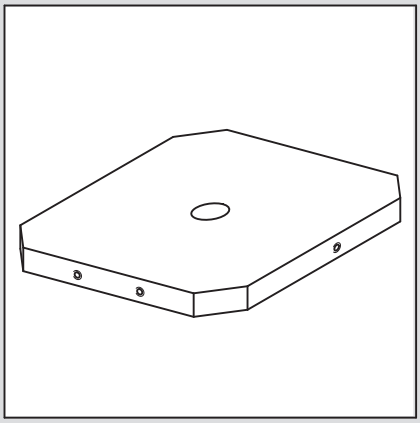

Subject to technical changes.

Subplates – STEEL

Id. No.	B [mm]	Ø D [mm]	M	N [mm]	E [mm]	F [mm]	G [mm]	S [mm]	Weight [kg]
57130010	320	30	-	160	-	-	-	40	30
57130020	400	50	M 16	200	55	25	18	40	48
57130030	450	50	-	225	-	-	-	40	61
57130040	500	50	M 16	250	75	25	18	40	76
57130050	550	50	-	275	-	-	-	40	93
57130060	630	50	M 16	315	100	25	18	40	121

Special sizes on request.

RT

Subplates

- Steel grinded
- With grid bore holes

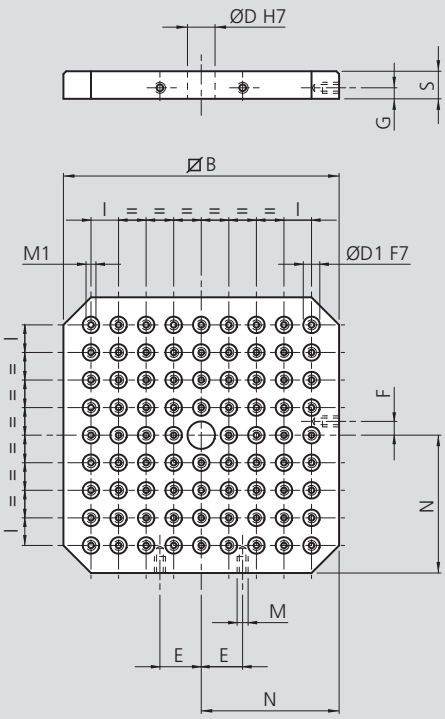

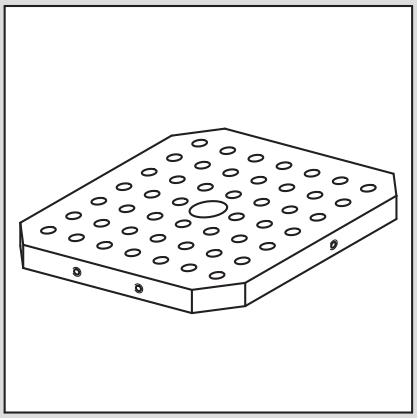

Subject to technical changes.

Grid plate – STEEL

Id. No.	B [mm]	Ø D [mm]	M	E [mm]	F [mm]	G [mm]	Ø D1 [mm]	M1	I [mm]	N [mm]	S [mm]	Weight [kg]
57140010	320	30	-	-	-	-	16	M12	50	160	40	29
57140020	400	50	M16	55	25	18	16	M12	50	200	40	47
57140030	450	50	-	-	-	-	16	M12	50	225	40	59
57140040	500	50	M16	75	25	18	16	M12	50	250	40	74
57140050	550	50	-	-	-	-	16	M12	50	275	40	90
57140060	630	50	M16	100	25	18	16	M12	50	315	40	117

Special sizes on request.

Notes

Precision machine vises from SMW-AUTOBLOK

Advantages:

- High constant clamping forces
- Maximum rigidity of the body
- Highest precision and accuracy
- Interfaces for zero point clamping system APS / WPS / ZeroAct
- Economic efficiency and flexibility

High precision vises from SMW-AUTOBLOK ensures highest process reliability while machining and best handling.
The large range of accessories guarantees the flexible use of the vices.
The use of SinterGrip inserts allow lowest clamping depths without pre-marking and is ideal for OP 10 operations.

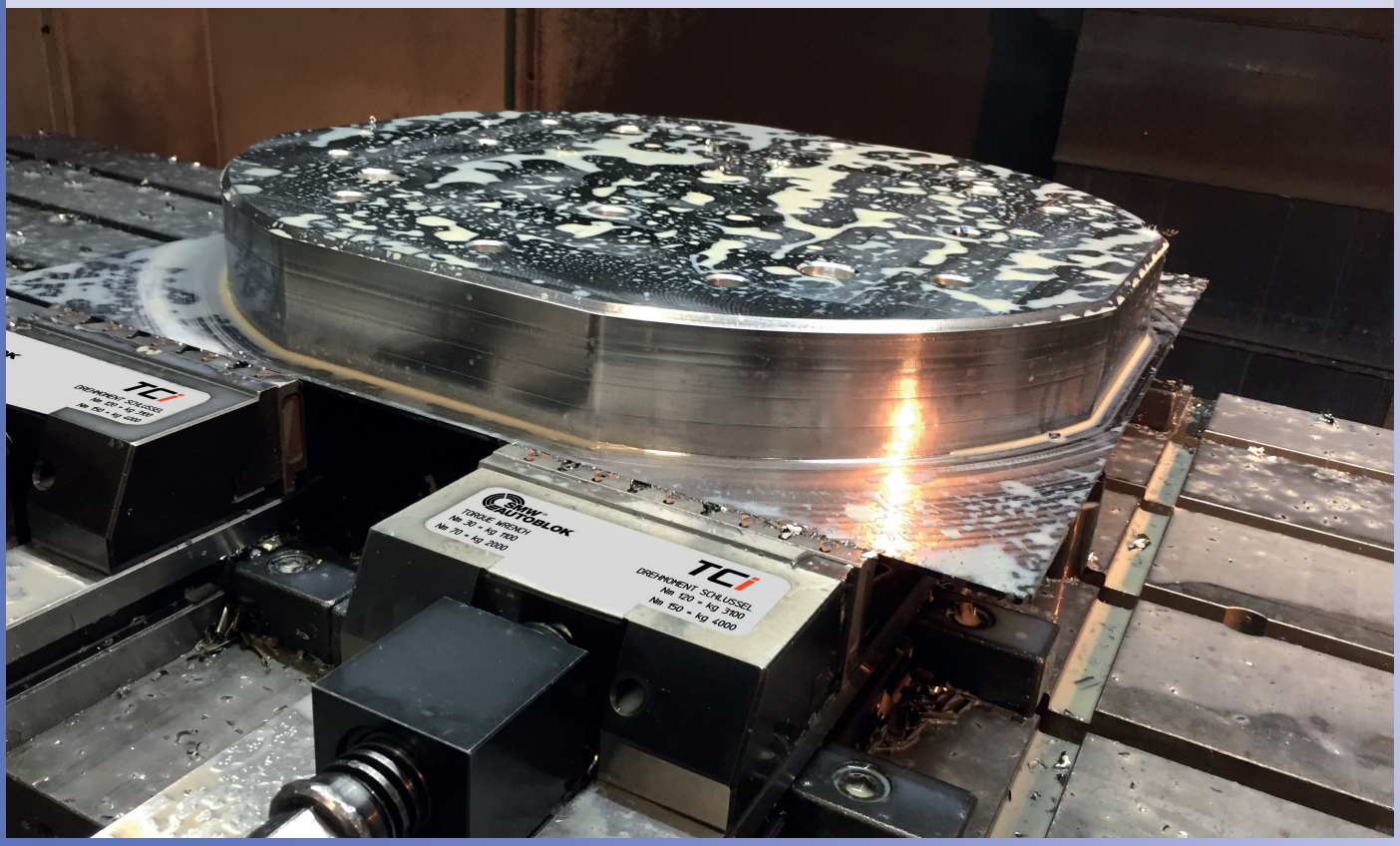

Precision machine vises

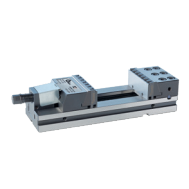

Page 268

TCi

Precision bench vise

- Quick pre-positioning for the movable jaw
- Pull down jaws with 1 serrated clamping side
- Jaws for SinterGrip clamping
- Parallels quick change system CLAK
- Wide range of standard accessories
- Interface Zero point clamping system (optional)

Page 283

MCi

Precision bench vise

- Quick pre-positioning for the movable jaw
- Pull down jaws
- Jaws for SinterGrip clamping
- Parallels quick change system CLAK
- No side mounting possible
- Interface Zero point clamping system (optional)

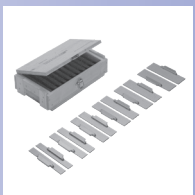

Page 295

CLAK System

Parallels

- Parallels for quick change systems
- Suitable for TCi and MCi vices

Page 300

TTi-2G

NC clamping vise

- Mechanical precise power transmitter
- Low maintenance sealed spindle
- Easy and quick cleaning
- Exact clamping force pre-adjustment (up to 11 steps)
- Standard jaw interface (Allmatic-interchangeable)
- Interface zero point clamping system

Page 308

VCM

NC clamping vise without power transmitter

- High clamping forces
- Easy and quick cleaning
- Huge range of accessories

TCi
Precision bench vise

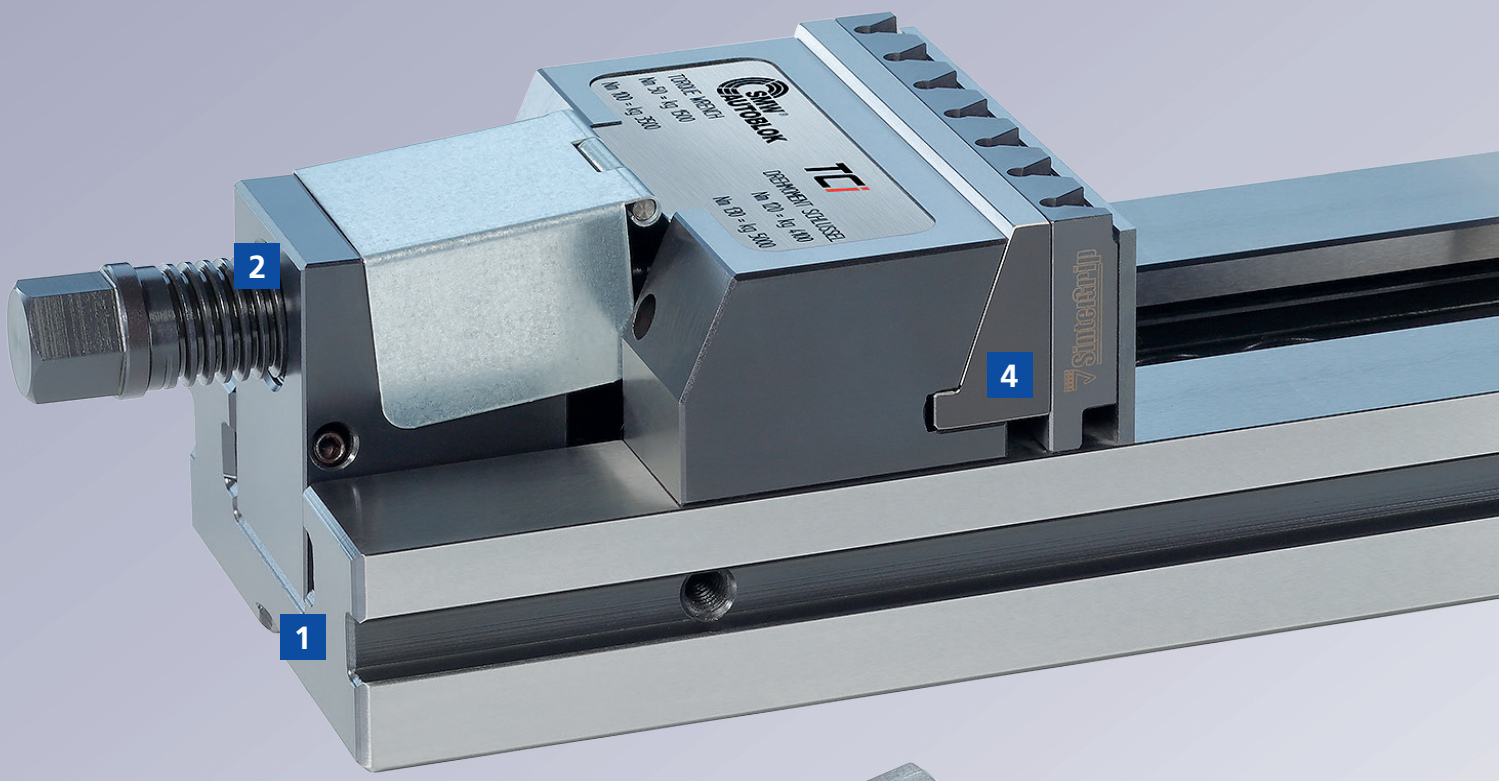

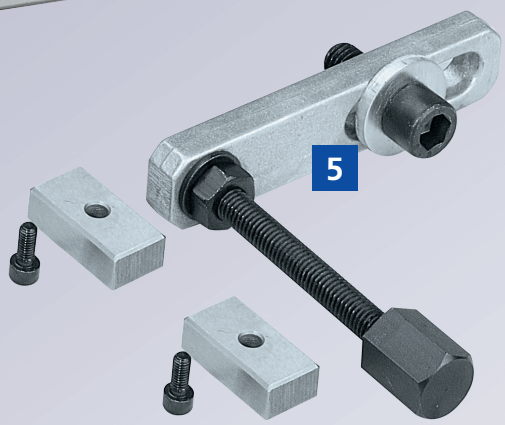

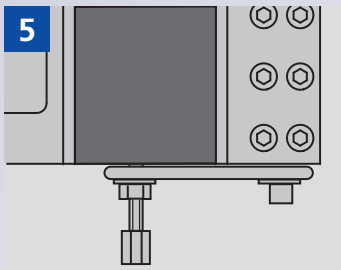

Workpiece stop

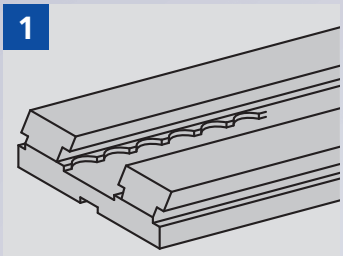

Quick positioning
of the movable jaw

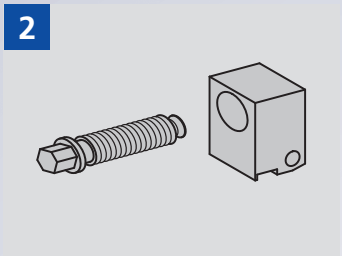

Block for clamping screw

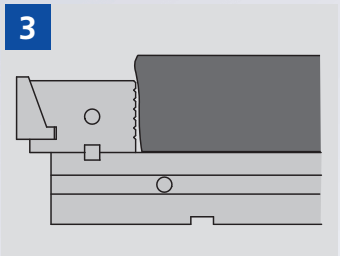

Fixed support turned of 180°
(grooved part)

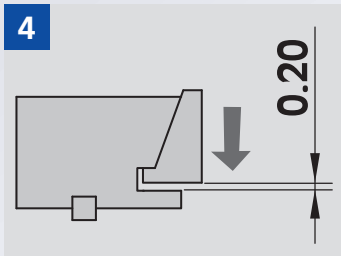

Pull-down jaws
(Pull-down lockable)

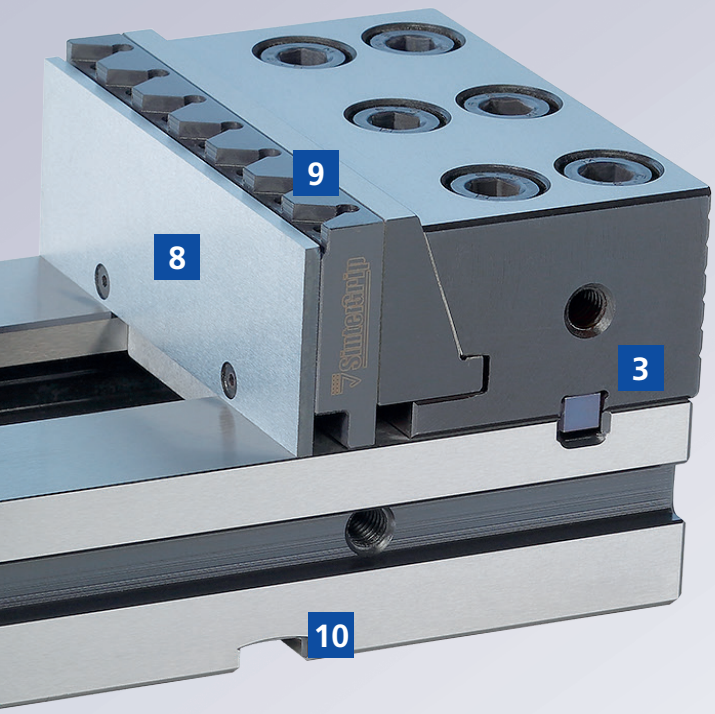

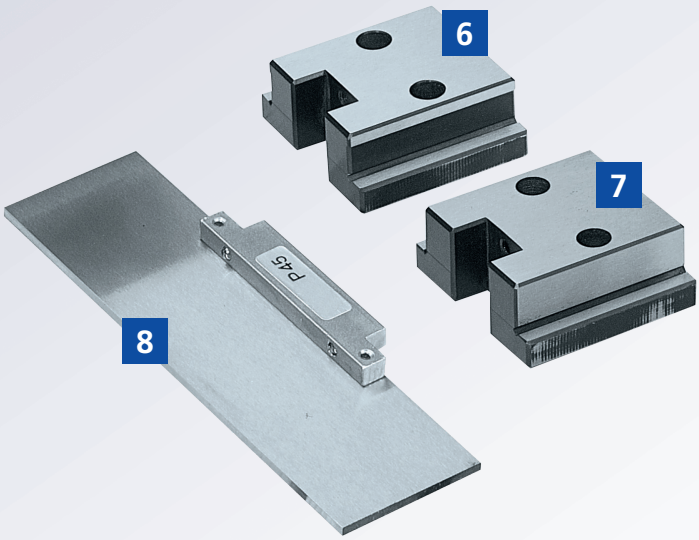

6

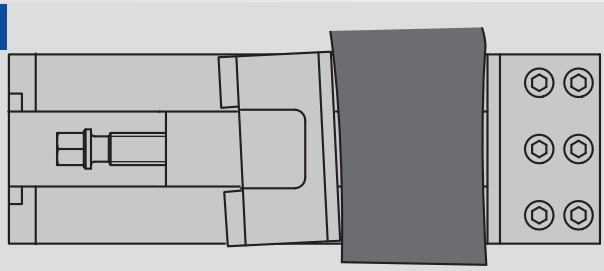

Floating slide-way raw workpieces

7

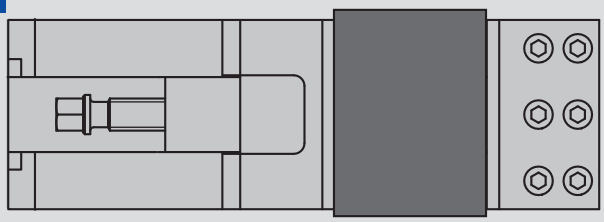

Rigid slide-way for finished workpieces

8

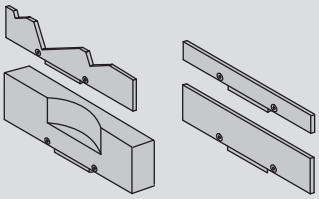

CLAK Quick change system for parallels

9

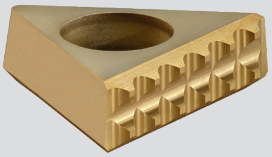

Jaws for SinterGrip clamping inserts

10

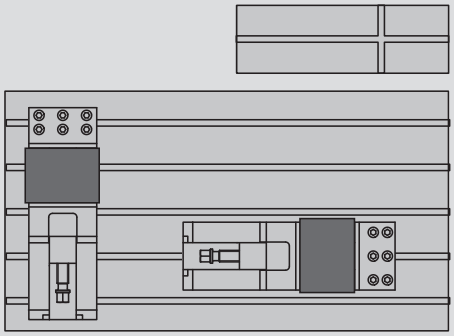

Precise T-slots for the assembling on the machine table by using positioning keys

TCi

Precision bench vise

■ Quick positioning for the jaw
■ Pull-down jaws with SinterGrip

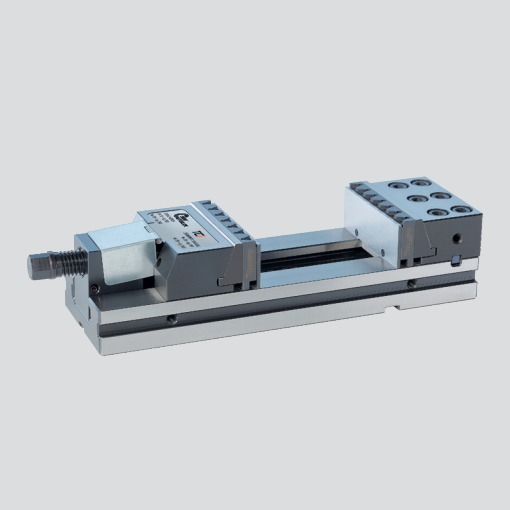

Application/customer benefits

- High precision bench vise
- Quick positioning for the movable jaw
- Pull-down jaws including the possibility to use them without pull down effect for OP 10 operations
- Easy and quick cleaning possible
- Maximum flexibility due to the wide range of accessories
- Tolerances according to JIS standards

SinterGrip Page 116

Technical features

- 3 different jaw sizes
- Pull-down jaws (0.2 mm), 180° turned with serrated clamping side for OP 10
- Parallel stripes with quick change „CLAK-System“ see page 295
- Optional: Interface for zero point clamping systems APS / WPS / ZeroAct (on request)

Standard equipment

TCi precision bench vise with clamping wrench, pull-down jaws, jaws for SinterGrip clamping inserts, workstop, protection cover for spindle, parallels with quick change „CLAK-System“, floating slide-ways, 1 pair positioning keys, transport box

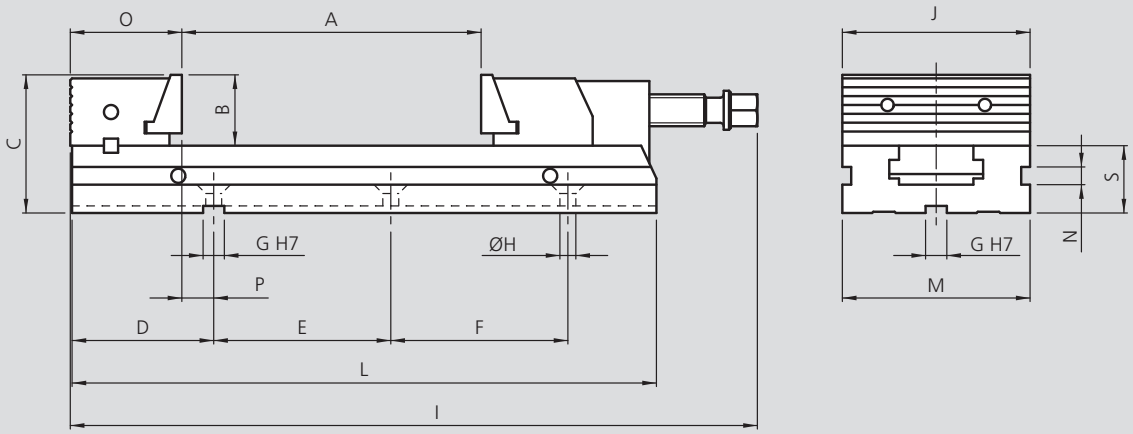

Subject to technical changes.

Order review

Type	Id. No.	A [mm]	B [mm]	C [mm]	D [mm]	E [mm]	F [mm]	G [mm]	H [mm]	I [mm]	J [mm]	L [mm]	M [mm]	N [mm]	O [mm]	P [mm]	S [mm]	Weight [kg]
TCi 110 x 100	77580101	100	40	78	80	150	-	12	9	338	110	280	110	10	63	18	38	11.5
TCi 110 x 150	77580102	150	40	78	80	100	100	12	9	388	110	330	110	10	63	18	38	12.5
TCi 150 x 200	77580201	200	50	98	114	200	-	18	12.5	481	150	413	150	13	85	30	48	27
TCi 150 x 250	77580202	250	50	98	114	100	150	18	12.5	531	150	463	150	13	85	30	48	29
TCi 150 x 300	77580203	300	50	98	114	100	100	18	12.5	588	150	520	150	13	85	30	48	31.5
TCi 200 x 300	77580302	300	70	138	149	200	200	18	12.5	697	200	610	200	15.5	123	27	68	78
TCi 200 x 400	77580303	400	70	138	149	150	150	18	12.5	797	200	710	200	15.5	123	27	68	86

Special sizes on request.

Precision bench vise

TCi-XL

- Quick positioning for the jaw
- Extra long clamping range

Application/customer benefits

- High precision bench vise in extra long version
- Quick positioning for the movable jaw
- Pull-down jaws including the possibility to use them without pull down effect for OP 10 operations
- Easy and quick cleaning possible
- Maximum flexibility due to the wide range of accessories

Technical features

- 2 different jaw sizes
- Pull-down jaws (0.2 mm), 180° turned with serrated clamping side for OP 10
- Parallel stripes with quick change „CLAK-System“ see page 295
- Optional: interface for zero point clamping systems APS / WPS / ZeroAct (on request)

Standard equipment

TCi-XL precision bench vise with clamping wrench, pull-down jaws, workstop, protection cover for spindle, parallels with quick change „CLAK-System“, floating slide-ways, 1 pair positioning keys, transport box

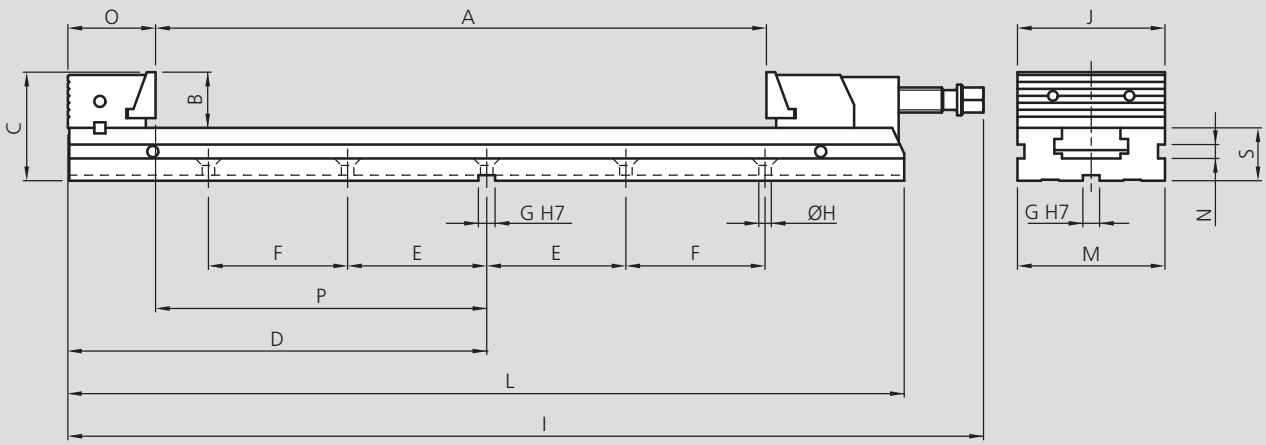

Subject to technical changes.

Order review

Type	Id. No.	A [mm]	B [mm]	C [mm]	D [mm]	E [mm]	F [mm]	G [mm]	H [mm]	I [mm]	J [mm]	L [mm]	M [mm]	N [mm]	O [mm]	P [mm]	S [mm]	Weight [kg]
TCi-XL 110 x 425	77580104	425	40	78	300	100	100	12	9	658	110	600	110	10	63	238	38	18.2
TCi-XL 150 x 545	77580204	545	50	98	379	100	150	18	12.5	825	150	758	150	13	85	298	48	40.0
TCi-XL 150 x 665	77580205	665	50	98	439	100	200	18	12.5	946	150	878	150	13	85	355	48	44.7

TCi-DC

Precision bench vise

■ Quick positioning for the jaw
■ Double clamping system

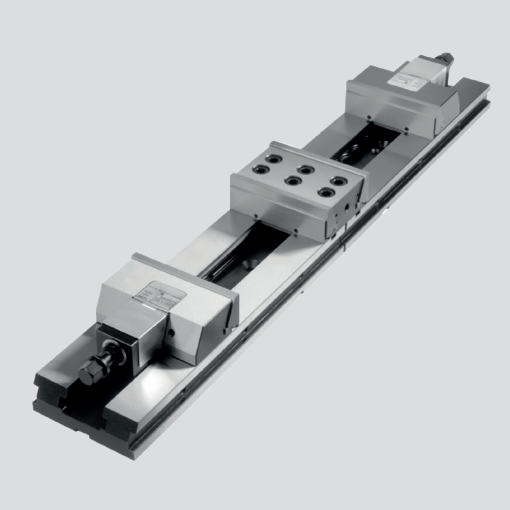

Application/customer benefits

- High precision bench vise with double clamping system
- Quick positioning for the movable jaw
- Pull-down jaws including the possibility to use them without pull down effect for OP 10 operations
- Easy and quick cleaning possible
- Maximum flexibility due to the wide range of accessories

Technical features

- 3 different jaw sizes
- Pull-down jaws (0.2 mm), 180° turned with serrated clamping side for OP 10
- Parallel stripes with quick change „CLAK-System“ see page 295
- Optional: interface for zero point clamping systems APS / WPS / ZeroAct (on request)

Standard equipment

TCi-DC precision bench vise with clamping wrench, pull-down jaws, workstop, protection cover for spindle, parallels with quick change „CLAK-System“, floating slide-ways, 1 pair positioning keys, transport box

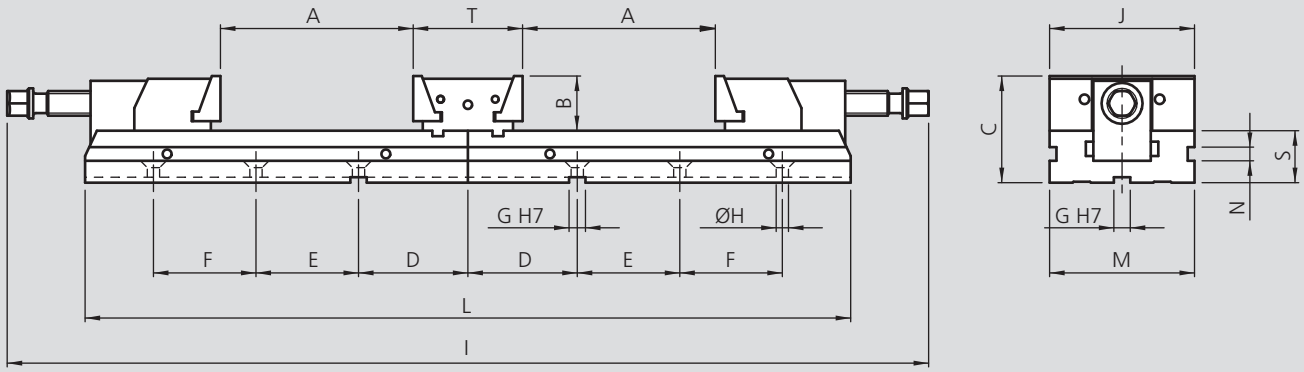

Subject to technical changes.

Order review

Type	Id. No.	A [mm]	B [mm]	C [mm]	D [mm]	E [mm]	F [mm]	G [mm]	H [mm]	I [mm]	J [mm]	L [mm]	M [mm]	N [mm]	S [mm]	T [mm]	Weight [kg]
TCi-DC 110 x 130	77581101	130	40	78	80	150	-	12	9	676	110	56	110	10	38	80	22
TCi-DC 110 x 180	77581102	180	40	78	80	100	100	12	9	776	110	660	110	38	80	24	24
TCi-DC 150 x 230	77581201	230	50	98	116	200	-	18	12.5	966	150	830	150	13	48	108	52
TCi-DC 150 x 280	77581202	280	50	98	116	100	150	18	12.5	1066	150	930	150	13	48	108	56
TCi-DC 200 x 330	77581302	330	70	138	150	200	200	18	12.5	1394	200	1222	200	15.5	68	194	144

Clamping force diagram

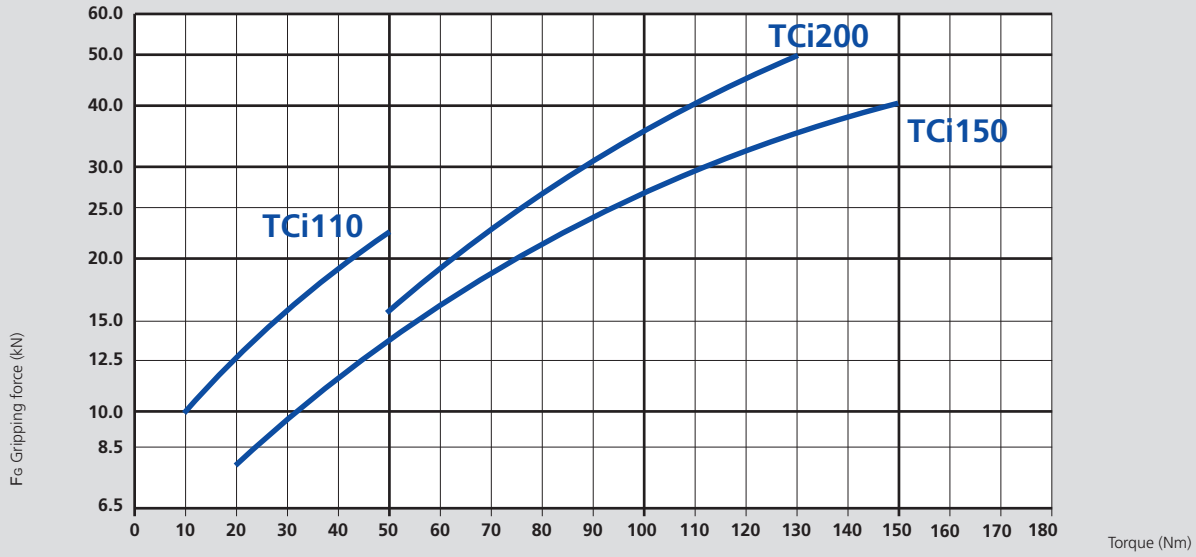

Form, position and dimensional tolerances for all clamping vises TCi

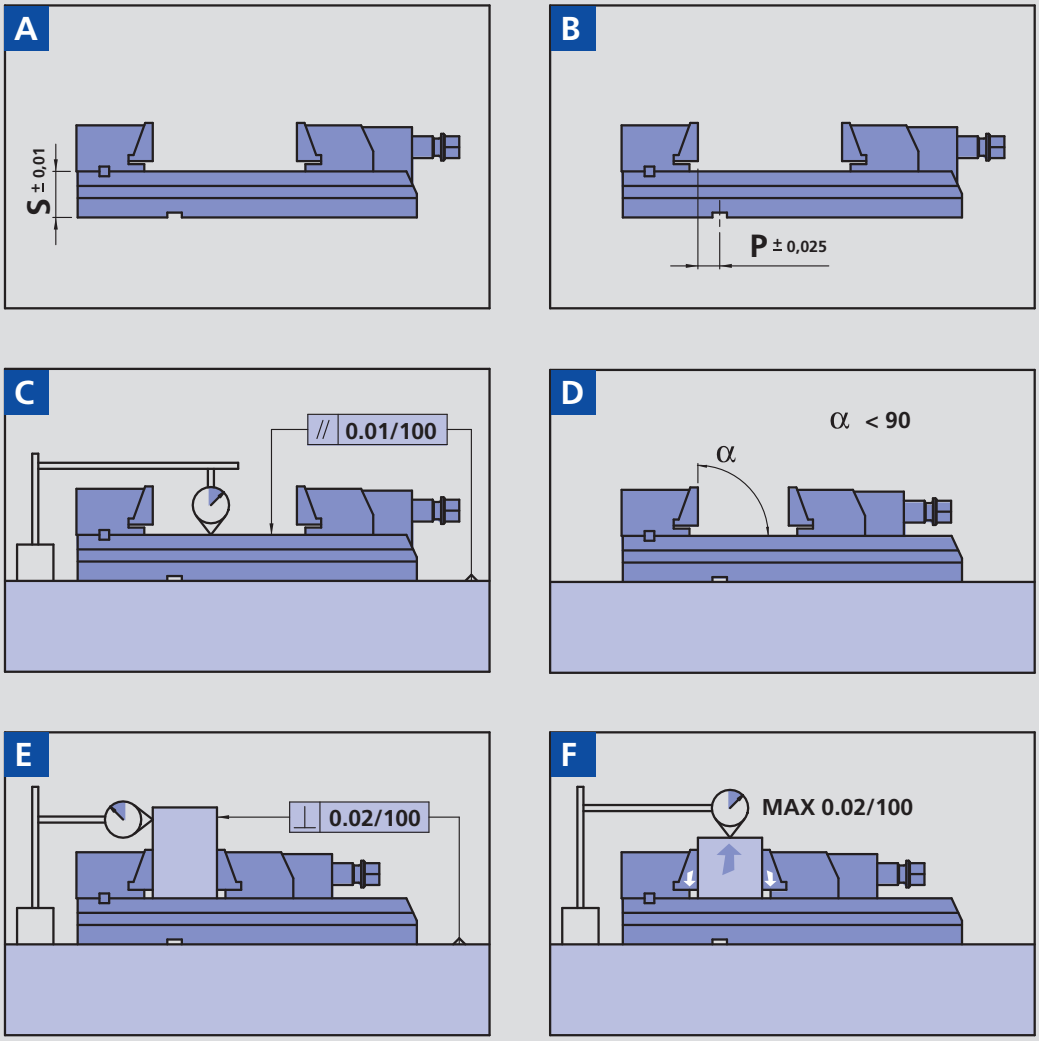

TCi extension element with pair of positioning keys

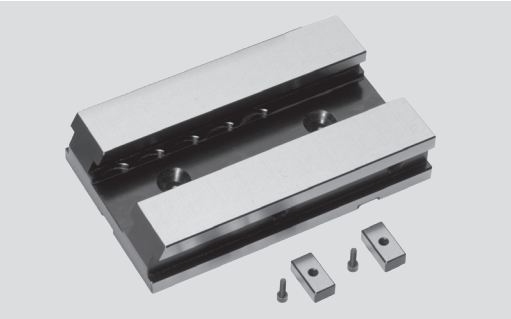

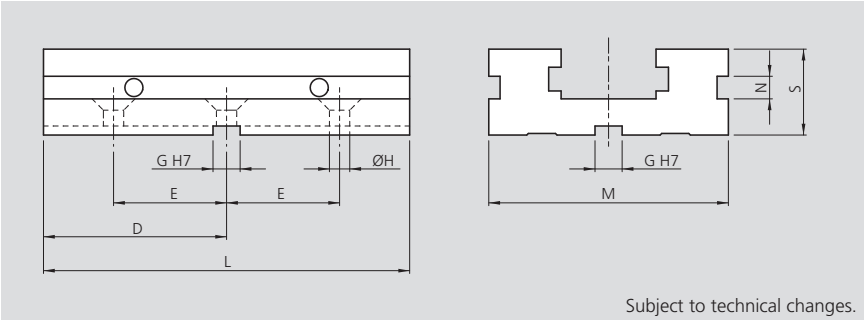

Subject to technical changes.

Type	Id. No.	D [mm]	E [mm]	G [mm]	H [mm]	L [mm]	M [mm]	N [mm]	S [mm]	Weight [kg]
TCi-110	58011700	81	50	12	9	162	110	10	38	3.5
TCi-150	58021700	114	75	18	12.5	228	150	13	48	9
TCi-200	58031700	150	100	18	12.5	300	200	15.5	68	22

Application examples

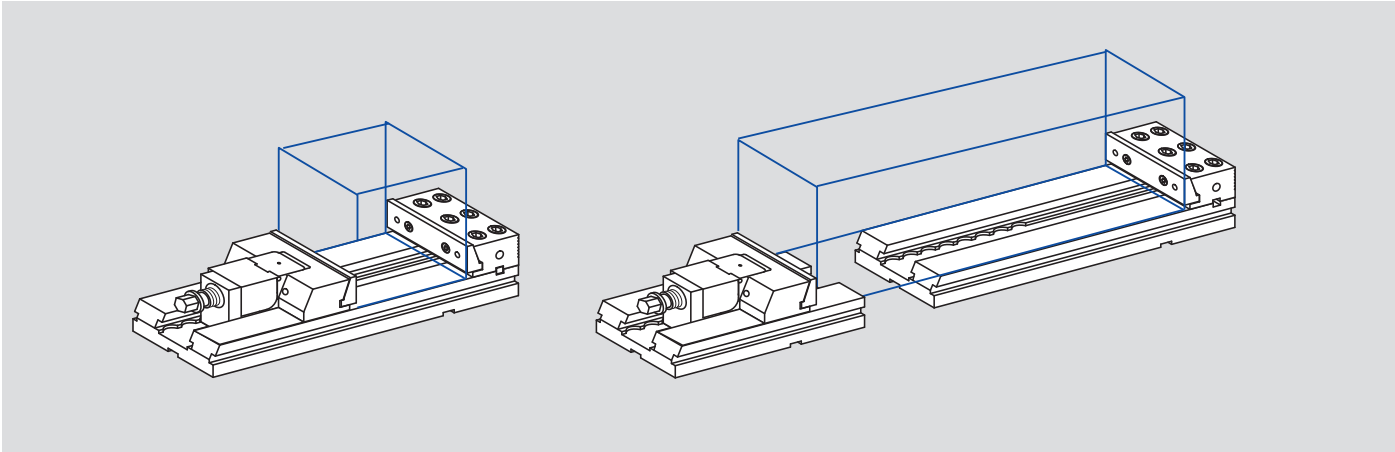

Precision bench vise

TCi

- Clamping unit, fix jaw and double jaw single unit
- Flexible application

TCi Clamping unit for flexible application

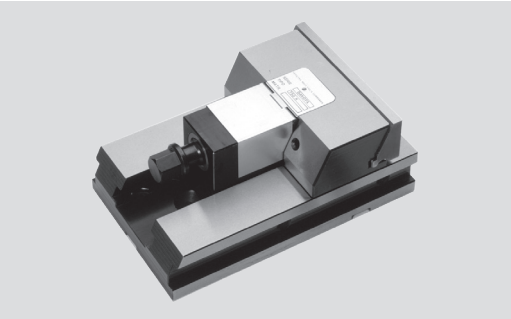

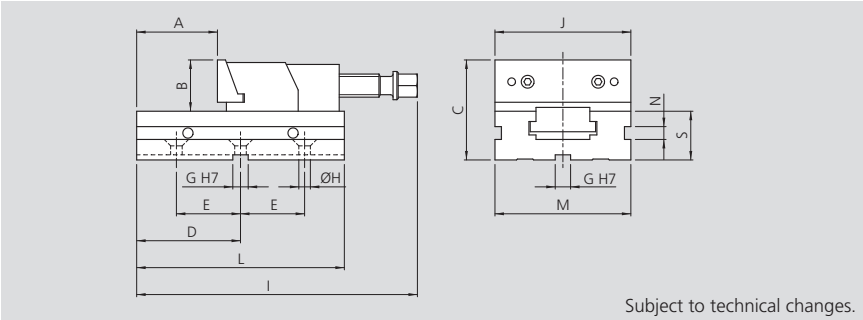

Subject to technical changes.

Type	Id. No.	A [mm]	B [mm]	C [mm]	D [mm]	E [mm]	G [mm]	H [mm]	I [mm]	J [mm]	L [mm]	M [mm]	N [mm]	S [mm]	Weight [kg]
TCi-110	58017110	60	40	78	81	50	12	9	220	110	162	110	10	38	6.2
TCi-150	58027110	100	50	98	114	75	18	12.5	295	150	228	150	13	48	15.1
TCi-200	58037110	120	70	138	150	100	18	12.5	390	200	300	200	15.5	68	39.2

TCi fix jaw unit for flexible application

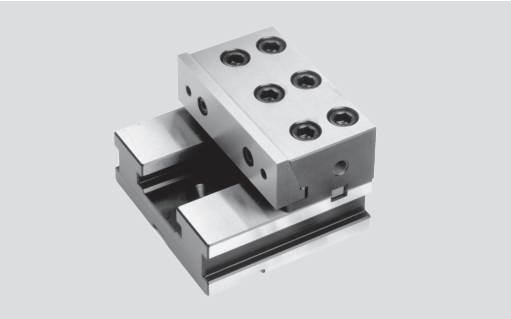

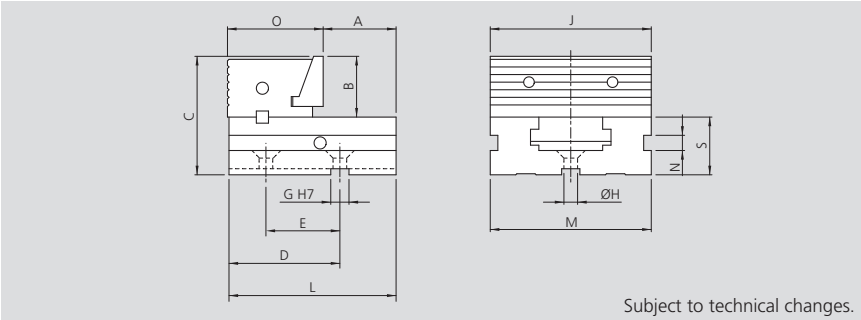

Subject to technical changes.

Type	Id. No.	A [mm]	B [mm]	C [mm]	D [mm]	E [mm]	G [mm]	H [mm]	J [mm]	L [mm]	M [mm]	N [mm]	O [mm]	S [mm]	Weight [kg]
TCi-110	58017010	58	40	78	80	50	12	9	110	120	110	10	63	38	4
TCi-150	58027010	81	50	98	114	75	18	12.5	150	165	150	13	85	48	9
TCi-200	58037010	82	70	138	149	100	18	12.5	200	205	200	15.5	123	68	28

TCi double jaw unit for flexible application

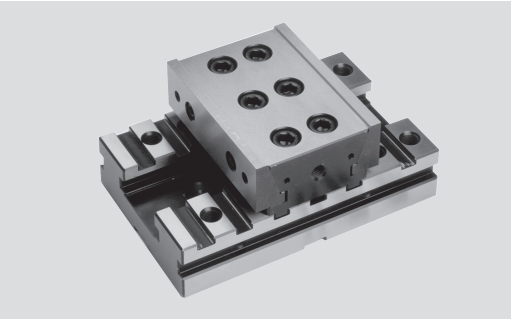

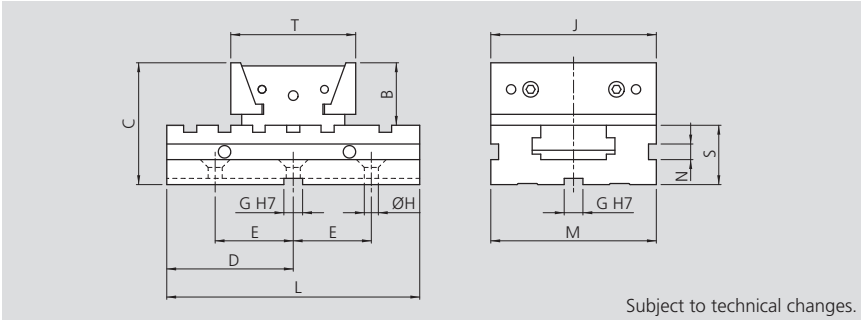

Subject to technical changes.

Type	Id. No.	B [mm]	C [mm]	D [mm]	E [mm]	G [mm]	H [mm]	J [mm]	L [mm]	M [mm]	N [mm]	S [mm]	T [mm]	Weight [kg]
TCi-110	58117010	40	78	81	50	12	9	110	162	110	10	38	80	5.6
TCi-150	58127010	50	98	114	75	18	12.5	150	228	150	13	48	108	13.5
TCi-200	58137010	70	138	150	100	18	12.5	200	300	200	15.5	68	194	34.7

TCi clamping units for flexible applications

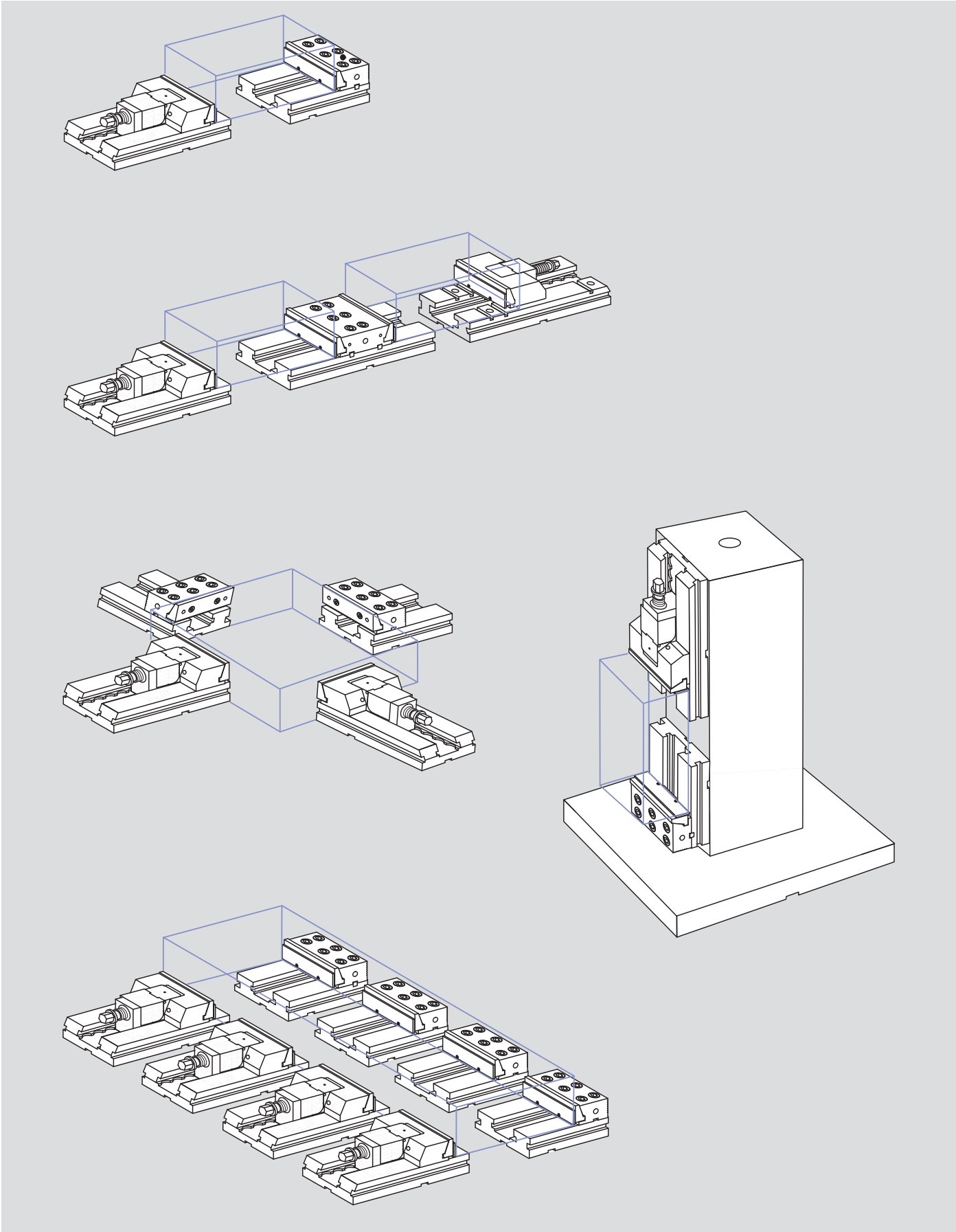

TCi jaws for SinterGrip clamping inserts

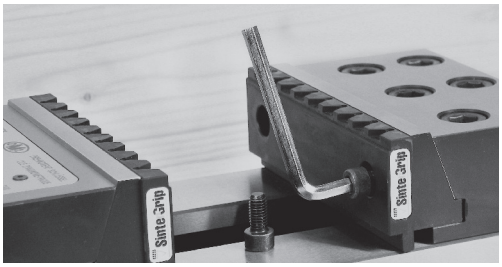

Type	Id. No.
TCi 110	58451159
TCi 150	58451219
TCi 200	58451419

Consisting of:
2 pieces jaws
without SinterGrip Inserts

SinterGrip
Page 116

TCi pull-down jaws smooth

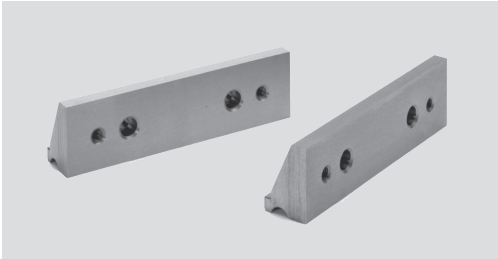

Type	Id. No.
TCi 110	58010409
TCi 150	58020409
TCi 200	58030409

Consisting of:
2 pieces jaws

TCi pull-down jaws serrated

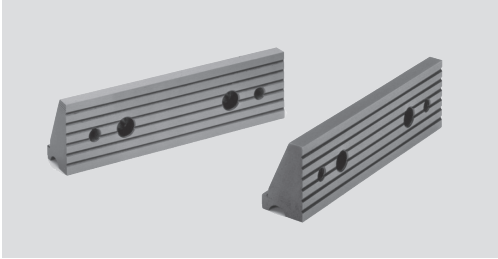

Type	Id. No.
TCi 110	58014409
TCi 150	58024409
TCi 200	58034409

Consisting of:
2 pieces jaws

TCi torque wrench

Type	Id. No.
TCi 110	51501001
TCi 150	51501002
TCi 200	51501003

TCi fixed jaw carrier for double clamping (extension)

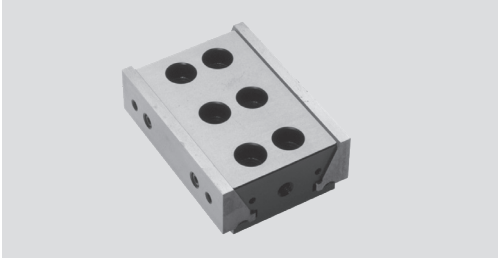

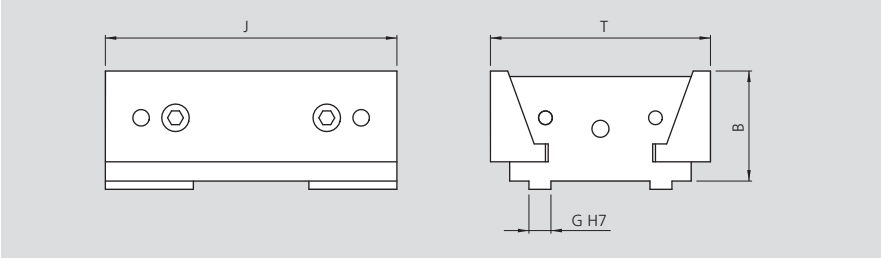

Type	Id. No	B [mm]	G [mm]	J [mm]	T [mm]	Weight [kg]
TCi 110	58117210	40	8	110	80	2.2
TCi 150	58127210	50	12	150	108	5
TCi 200	58137210	70	14	200	194	11.6

Clamps (1 pair) incl. screw and T-nut

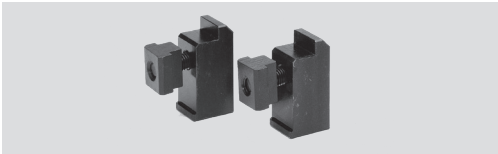

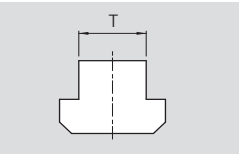

Type	Id. No. / groove width					
	12 mm	14 mm	16 mm	18 mm	20 mm	22 mm
TCi 110	58012792	58012793	58012794	58012795	58012796	58012797
TCi 150	58022792	58022793	58022794	58022795	58022796	58022797
TCi 200	58032792	58032793	58032794	58032795	58032796	58032797

T-nuts (1 pair) incl. screw

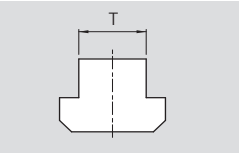

Type	Id. No. / groove width					
	12 mm	14 mm	16 mm	18 mm	20 mm	22 mm
TCi 110	58012592	58012593	58012594	58012595	58012596	58012597
TCi 150	58022592	58022593	58022594	58022595	58022596	58022597
TCi 200	58032592	58032593	58032594	58032595	58032596	58032597

Key way with standard dimensions (1 pair)

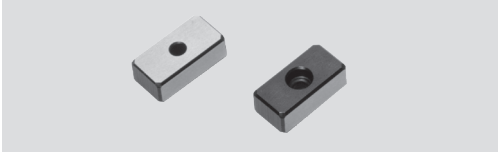

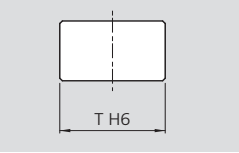

Type	Id. No. / groove width 12h6 mm
TCi 110	58011392
TCi 150	58021395
TCi 200	58021395

Key way with special dimensions (1 pair)

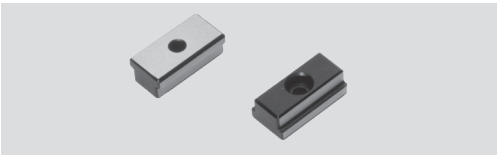

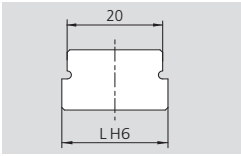

Type	Id. No. / groove width					
	12h6 mm	14h6 mm	16h6 mm	18h6 mm	20h6 mm	22h6 mm
TCi 110	58011392	58011393	58011394	58011395	58011396	58011397
TCi 150	58021392	58021393	58021394	58021395	58021396	58021397
TCi 200	58021392	58021393	58021394	58021395	58021396	58021397

Modular vertical clamping system

MVS-TCi

- Quick positioning for the jaw
- Maximum flexibility

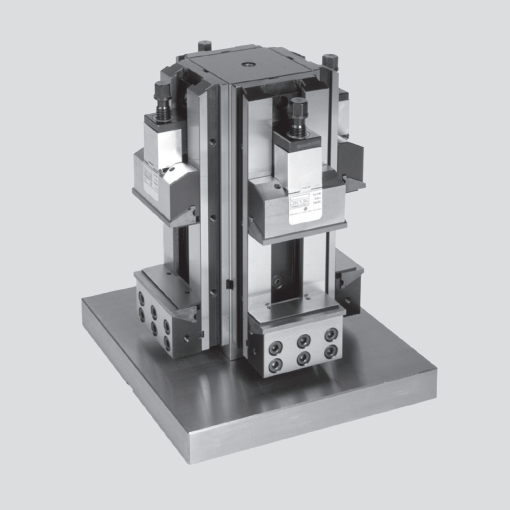

Application/customer benefits

- Steel tombstone ready to use on horizontal machining centres, including 4 TCi vices
- Quick positioning for the movable jaw
- Maximum flexibility due to the wide range of accessories

Technical features

- 2 different jaw sizes
- Pull-down jaws (0.2 mm)
- Parallel stripes with quick change „CLAK-System“ see page 295
- Interface for JIS pallets and for zero point clamping systems APS / WPS / ZeroAct (on request)

Standard equipment

Vertical clamping system complete with: 4 clamping equipment TCi, 1 column, 1 base for vertical system TCi, 4 pairs of SinterGrip jaws, 4 pairs of CLAK parallels, 4 covers for protection of the screws 4 rigid slide-ways, 4 floating slide-ways (for raw workpieces), 4 workstops, 4 wrenches, eye bolt for lifting, transport box

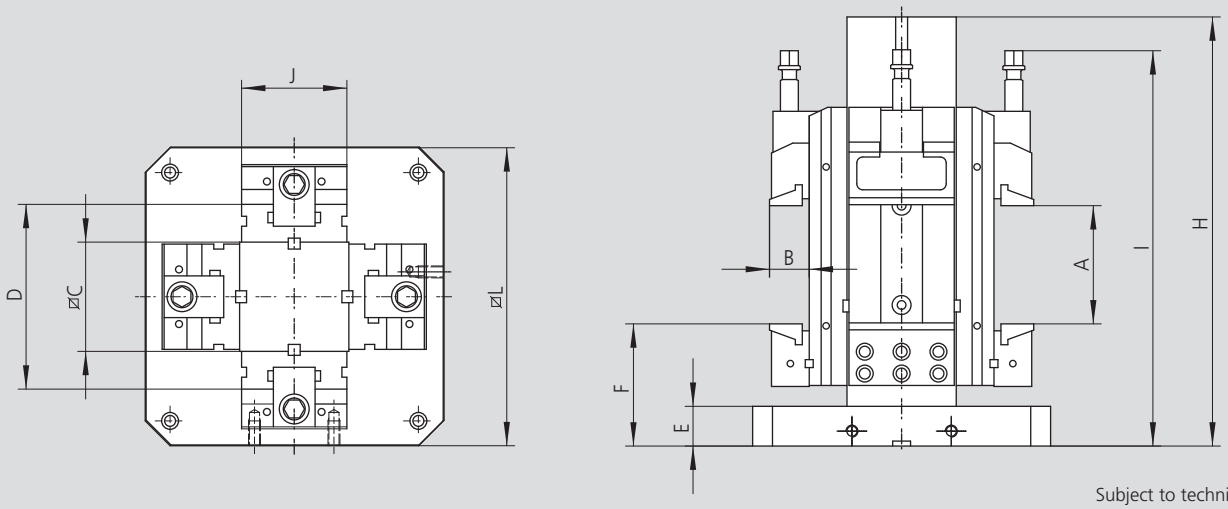

Subject to technical changes.

Order review

Type	Id. No.	A [mm]	B [mm]	C [mm]	D [mm]	E [mm]	F [mm]	H [mm]	I [mm]	J [mm]	L [mm]	Weight [kg]
MVS-TCi 110x100	77582111	100	40	110	186	40	123	391	400	110	300	108
MVS-TCi 110x150	77582112	150	40	110	186	40	123	391	450	110	300	112
MVS-TCi 150x200	77582221	200	50	150	246	40	151	580	550	150	400	255
MVS-TCi 150x250	77582222	250	50	150	246	40	151	580	600	150	400	263
MVS-TCi 150x300	77582223	300	50	150	246	40	151	580	655	150	400	273
MVS-TCi 150x200	77582231	200	50	150	246	40	151	580	550	150	500	282
MVS-TCi 150x250	77582232	250	50	150	246	40	151	580	600	150	500	290
MVS-TCi 150x300	77582233	300	50	150	246	40	151	580	655	150	500	300
MVS-TCi 200x300	77582332	300	70	200	336	40	173	661	750	200	500	580

MVS-TCi

Modular vertical clamping system

■ Steel tombstone

Application/customer benefits
- Steel tombstone ready to use on horizontal machining centres

Technical features
- Interface for JIS pallets and for zero point clamping systems APS / WPS / ZeroAct

Standard equipment
Tombstone

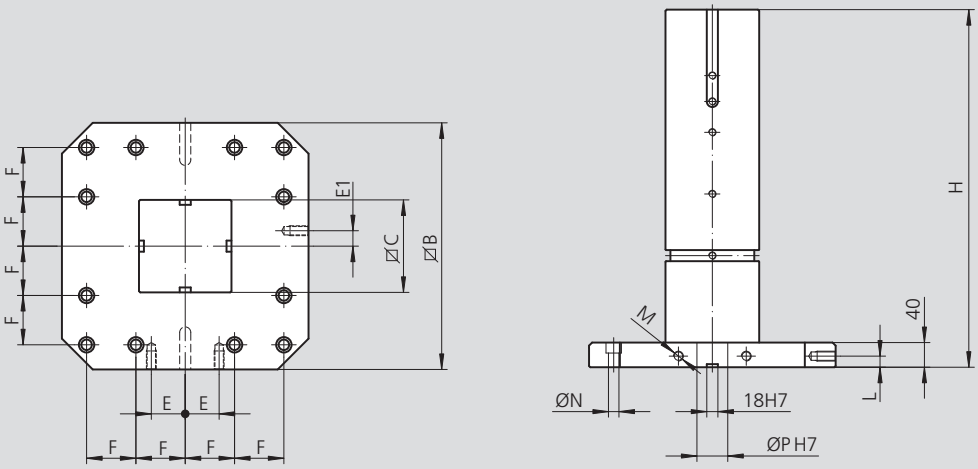

Subject to technical changes.

Order review

Type	Id. No.	B [mm]	C [mm]	E [mm]	E1 [mm]	F [mm]	H [mm]	L [mm]	M [mm]	N [mm]	P [mm]	Weight [kg]
MVS-TCi 110	58218010	300	110	40	0	125	391	15	12	13	25	57
MVS-TCi 150	58228020	400	150	55	25	80	580	18	16	17	50	142
MVS-TCi 150	58228030	500	150	75	25	100	580	18	16	17	50	169
MVS-TCi 200	58238030	500	200	75	25	100	661	18	16	17	50	266

Insert for vertical use

Type	Id. No.
MVS-TCi 110	58213300
MVS-TCi 150	58223300
MVS-TCi 200	58233300

Modular vertical clamping system

VCS-TC

- Quick positioning for the jaw
- Maximum flexibility

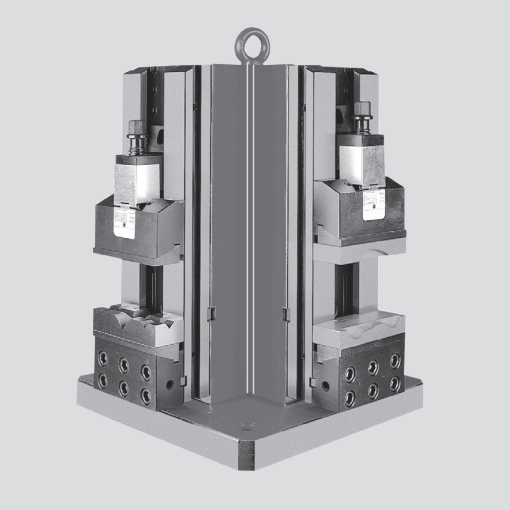

Application/customer benefits

- Steel cross tombstone ready to use on horizontal machining centres, including 4 TCi vises
- Quick positioning for the movable jaw
- Maximum flexibility due to the wide range of accessories

Technical features

- 2 different jaw sizes
- Pull-down jaws (0.2 mm)
- Parallel stripes with quick change „CLAK-System“ see page 295
- Interface for JIS pallets and for zero point clamping systems APS / WPS / ZeroAct (on request)

Standard equipment

Vertical clamping system complete with: 4 clamping equipment TCi, 1 cross tombstone, 4 pairs of SinterGrip jaws, 4 pairs of CLAK parallels, 4 covers for protection of the screws 4 rigid slide-ways, 4 floating slide-ways (for raw workpieces), 4 workstops, 4 wrenches, eye bolt for lifting, transport box

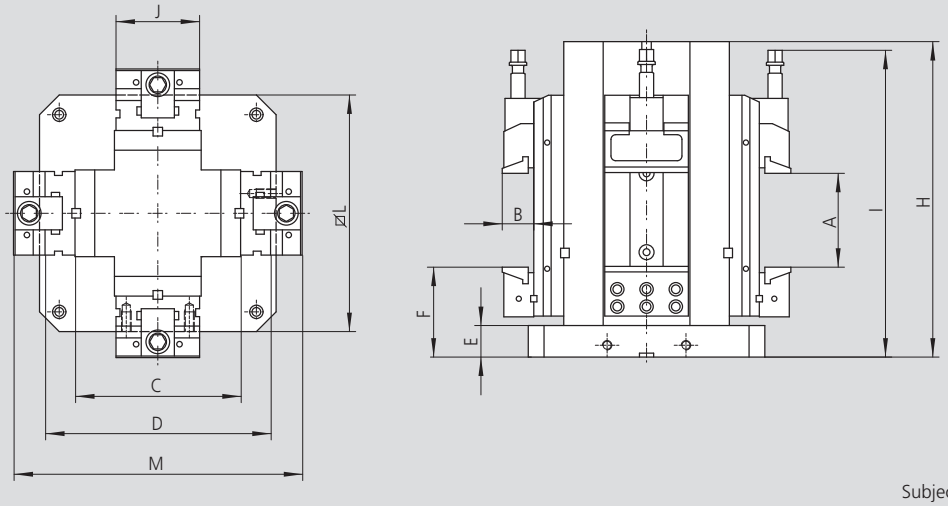

Subject to technical changes.

Order review

Type	Id. No.	A [mm]	B [mm]	C [mm]	D [mm]	E [mm]	F [mm]	H [mm]	I [mm]	J [mm]	L [mm]	M [mm]	Weight [kg]
VCS-TCi 110x100	77585111	100	40	210	286	40	114	382	390	110	300	366	121
VCS-TCi 110x150	77585112	150	40	210	286	40	114	382	440	110	300	366	125
VCS-TCi 150x200	77585221	200	50	300	396	40	145	580	545	150	400	496	320
VCS-TCi 150x250	77585222	250	50	300	396	40	145	580	595	150	400	496	328
VCS-TCi 150x300	77585223	300	50	300	396	40	145	580	652	150	400	496	338
VCS-TCi 150x200	77585231	200	50	300	396	40	145	580	545	150	500	496	348
VCS-TCi 150x250	77585232	250	50	300	396	40	145	580	595	150	500	496	356
VCS-TCi 150x300	77585233	300	50	300	396	40	145	580	652	150	500	496	366
VCS-TCi 200x300	77585342	300	70	350	486	45	182	670	760	200	630	626	675

Application examples

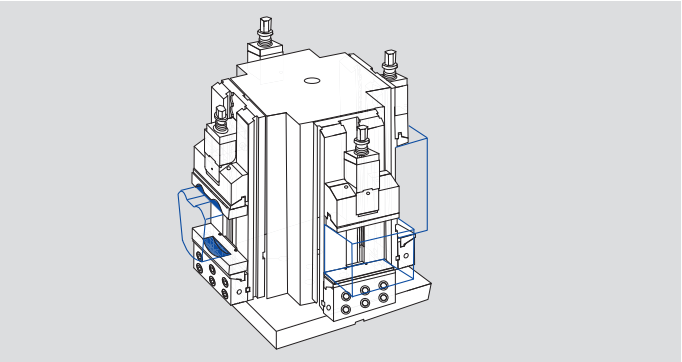

DVCS-TCi

Modular vertical double clamping system

- Quick positioning for the jaw
- Maximum flexibility

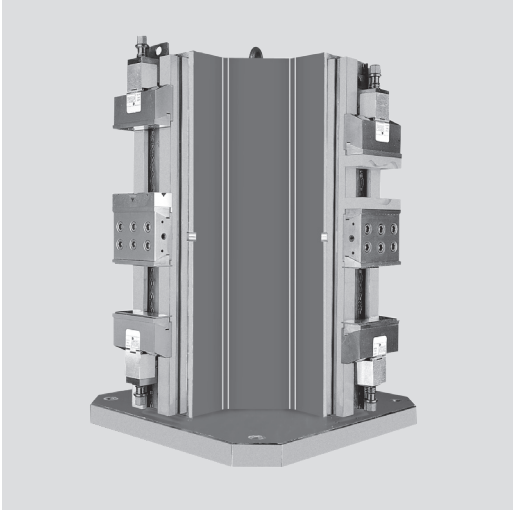

Application/customer benefits

- Steel cross tombstone ready to use on horizontal machining centres, including 4 TCi vises
- Extra long clamping range
- Quick positioning for the movable jaw
- Maximum flexibility due to the wide range of accessories

Technical features

- 3 different jaw sizes
- Pull-down jaws (0.2 mm), 180° turned with serrated clamping side for OP 10
- Parallel stripes with quick change „CLAK-System“ see page 295
- Interface for JIS pallets and for zero point clamping systems APS / WPS / ZeroAct (on request)

Standard equipment

Vertical clamping system complete with: 4 clamping equipment TCi-DC, 1 cross tombstone, 8 pairs of CLAK parallels, 8 covers for protection of the screws, 8 rigid slide-ways, 8 floating slide-ways (for raw workpieces), 8 workstops, 8 wrenches, eye bolt for lifting, transport box

Subject to technical changes.

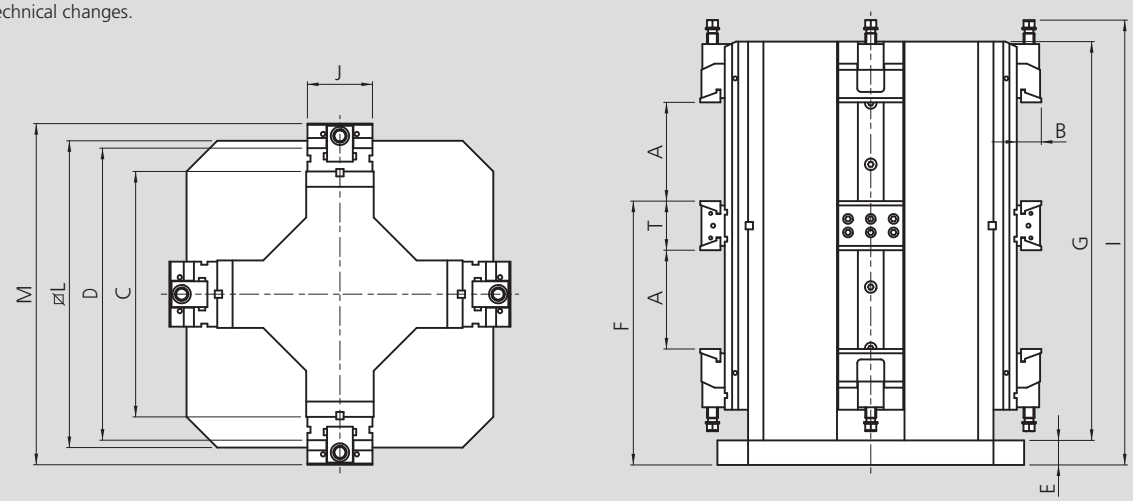

Order review

Type	Id. No.	A [mm]	B [mm]	C [mm]	D [mm]	E [mm]	F [mm]	G [mm]	I [mm]	J [mm]	L [mm]	M [mm]	T [mm]	Weight [kg]
DVCS-TCi 110x155	77586101	155	40	400	476	40	430	650	725	110	500	556	80	352
DVCS-TCi 150x195	77586201	195	50	550	646	45	515	795	890	150	630	746	108	647

Precision bench vise

MCi

- Quick positioning for the jaw
- Maximum flexibility

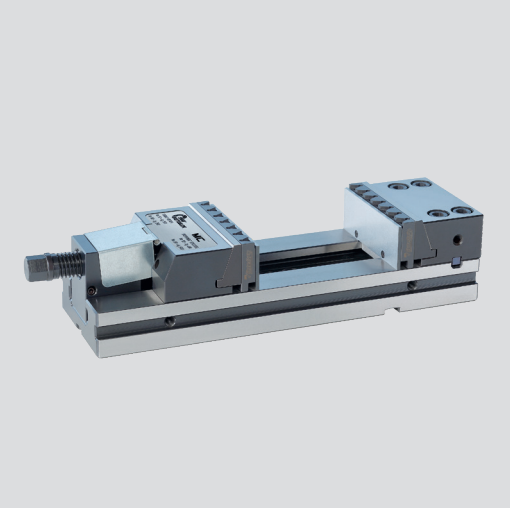

Application/customer benefits

- High precision bench vise in extra long version
- Quick positioning for the movable jaw
- Pull-down jaws including the possibility to use them without pull down effect for OP 10 operations
- Easy and quick cleaning possible
- Maximum flexibility due to the wide range of accessories

SinterGrip
Page 116

Technical features

- 2 different jaw sizes
- Pull-down jaws (0.2 mm)
- Parallel stripes with quick change „CLAK-System“ see page 295
- Optional: Interface for zero point clamping systems APS / WPS / ZeroAct (on request)
- No side mounting possible

Standard equipment

MCi precision bench vise with clamping wrench, pull-down jaws, jaws for SinterGrip clamping inserts, workstop, protection cover for spindle, parallels with quick change „CLAK-System“, 1 pair positioning keys, transport box

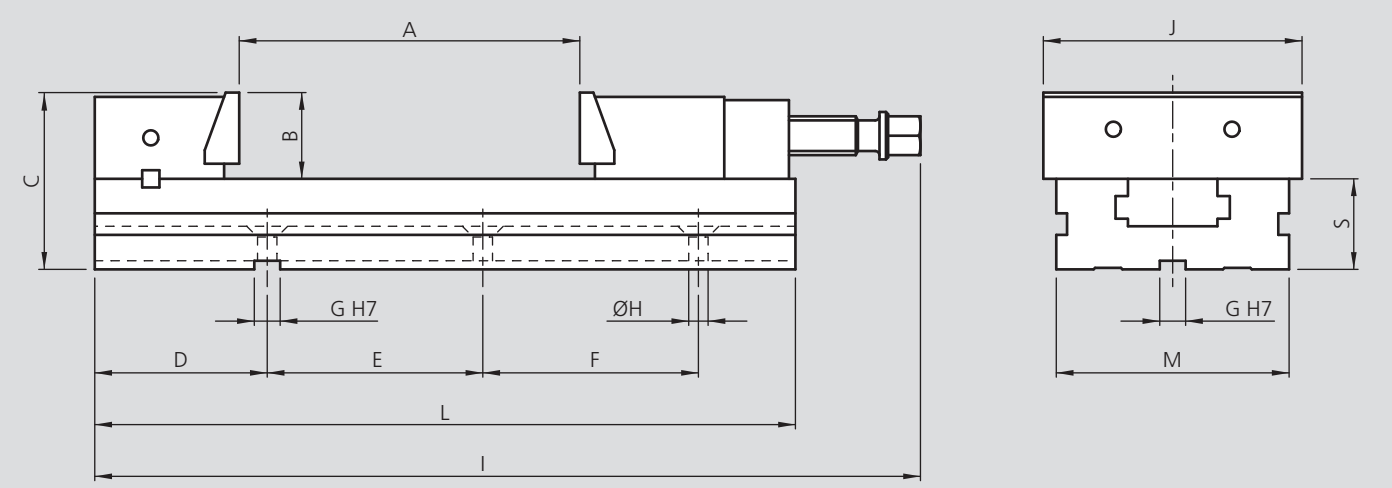

Subject to technical changes.

Order review

Type	Id. No.	A [mm]	B [mm]	C [mm]	D [mm]	E [mm]	F [mm]	G [mm]	H [mm]	I [mm]	J [mm]	L [mm]	M [mm]	O [mm]	S [mm]	Weight [kg]
MCi 150 x 200	77580601	200	50	102	120	200	-	18	12.5	482	150	415	128	85	52	25.5
MCi 150 x 250	77580602	250	50	102	120	100	100	18	12.5	532	150	465	128	85	52	57.5
MCi 150 x 300	77580603	300	50	102	120	100	100	18	12.5	587	150	520	128	85	52	30.4
MCi 200 x 300	77580701	300	70	136	150	150	150	18	12.5	656	200	570	168	109	66	66
MCi 200 x 400	77580702	400	70	136	150	200	200	18	12.5	756	200	670	168	109	66	68

Precision bench vise

MCi-XL

- Quick positioning for the jaw
- Extra long clamping range

Application/customer benefits

- High precision bench vise in extra long version
- Quick positioning for the movable jaw
- Pull-down jaws including the possibility to use them without pull down effect for OP 10 operations
- Easy and quick cleaning possible
- Maximum flexibility due to the wide range of accessories

Technical features

- Pull-down jaws (0.2 mm)
- Parallel stripes with quick change „CLAK-System“ see page 295
- Optional: interface for zero point clamping systems APS / WPS / ZeroAct (on request)

Standard equipment

MCi-XL precision bench vise with clamping wrench, pull-down jaws, workstop, protection cover for spindle, parallels with quick change „CLAK-System“, 1 pair positioning keys, transport box

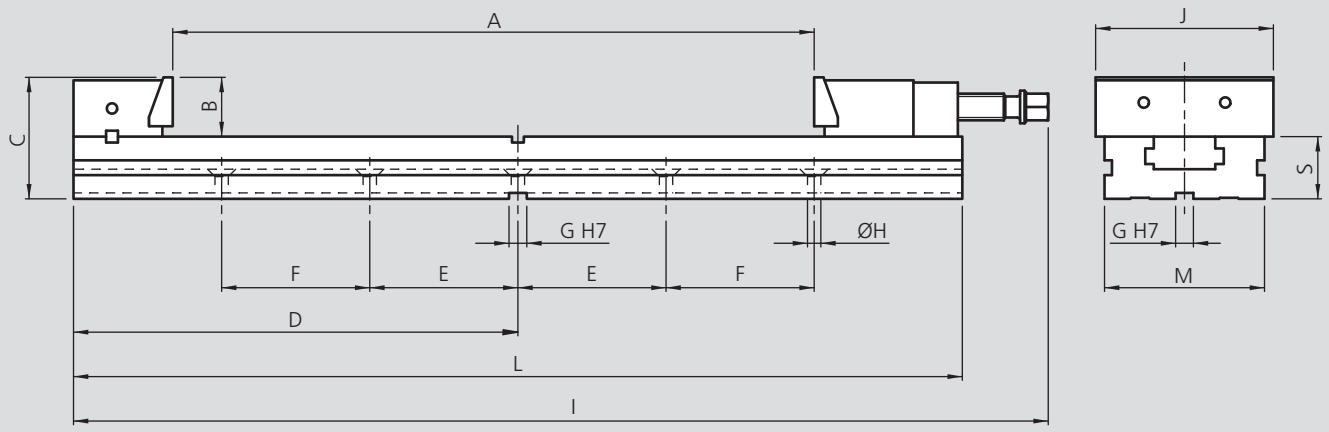

Subject to technical changes.

Order review

Type	Id. No.	A [mm]	B [mm]	C [mm]	D [mm]	E [mm]	F [mm]	G [mm]	H [mm]	I [mm]	J [mm]	L [mm]	M [mm]	S [mm]	Weight [kg]
MCi-XL 150x545	77580604	545	50	102	379	100	150	18	12.5	828	150	758	128	52	37
MCi-XL 150x655	77580605	655	50	102	439	100	200	18	12.5	938	150	878	128	52	41

Precision bench vise

MCi-DC

- Quick positioning for the jaw
- Double clamping system

Application/customer benefits

- High precision bench vise in extra long version
- Quick positioning for the movable jaw
- Pull-down jaws including the possibility to use them without pull down effect for OP 10 operations
- Easy and quick cleaning possible
- Maximum flexibility due to the wide range of accessories

Technical features

- Pull-down jaws (0.2 mm)
- Parallel stripes with quick change „CLAK-System“ see page 295
- Optional: Interface for zero point clamping systems APS / WPS / ZeroAct (on request)

Standard equipment

MCi-DC precision bench vise with clamping wrench, workstop, protection cover for spindle, parallels with quick change „CLAK-System“, 1 pair positioning keys, transport box

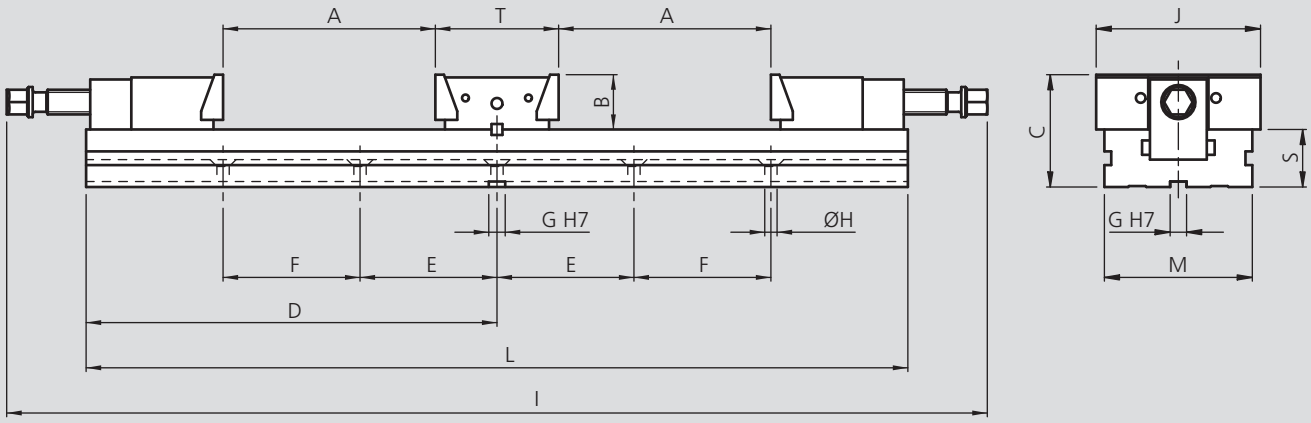

Subject to technical changes.

Order review

Type	Id. No.	A [mm]	B [mm]	C [mm]	D [mm]	E [mm]	F [mm]	G [mm]	H [mm]	I [mm]	J [mm]	L [mm]	M [mm]	S [mm]	T [mm]	Weight [kg]
MCi-DC 150x200	77581601	200	50	102	379	100	150	18	12.5	897	150	758	128	52	103	44
MCi-DC 150x250	77581602	250	50	102	439	100	200	18	12.5	997	150	878	128	52	103	48

Clamping force diagram

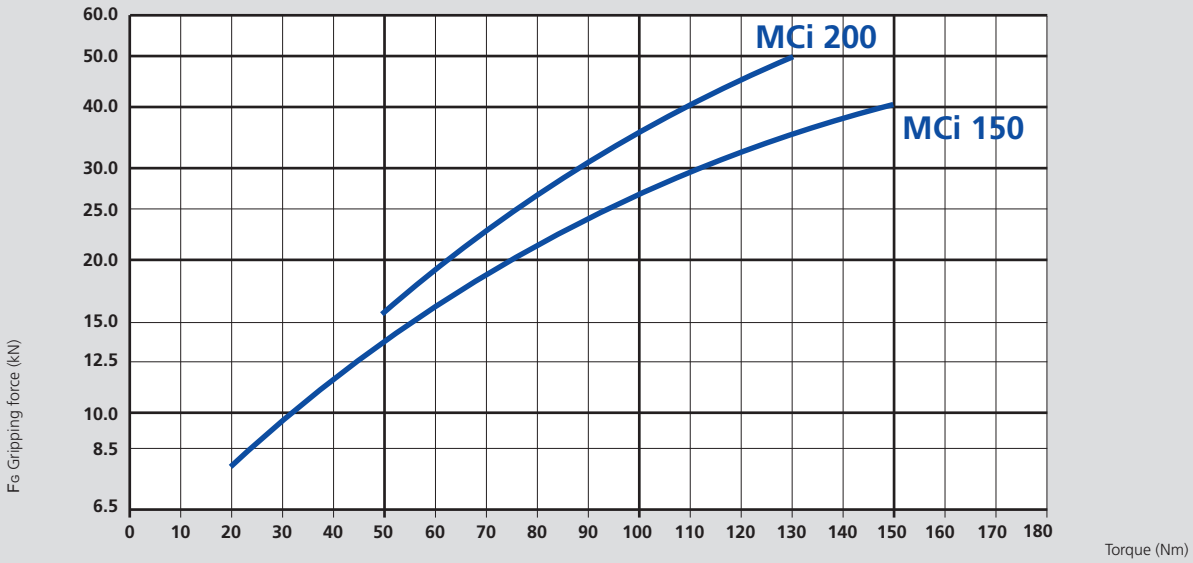

Form, position and dimensional tolerances for all clamping vices MCi

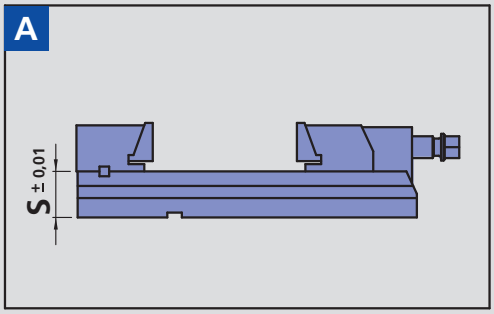

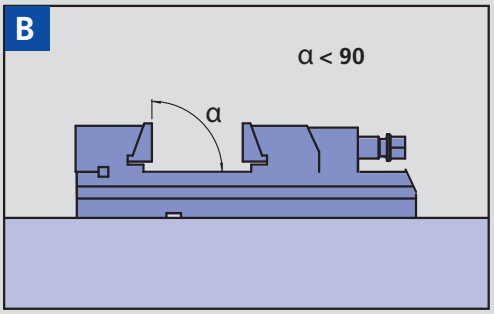

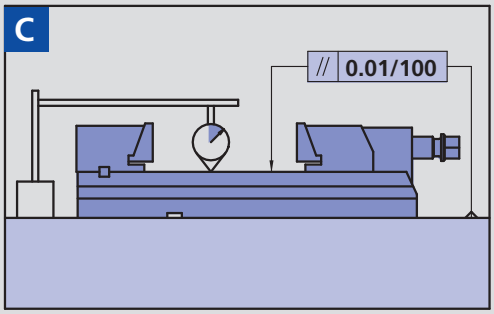

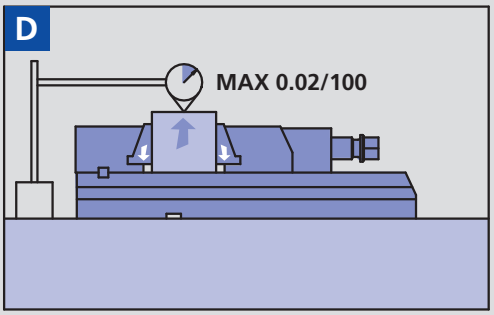

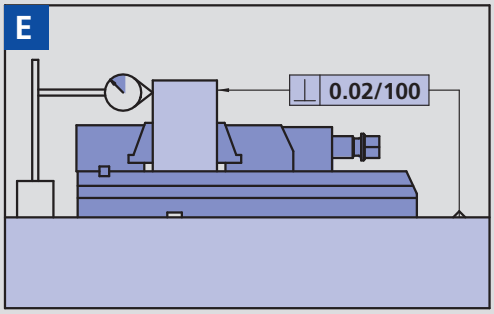

MCi extension element with pair of positioning keys

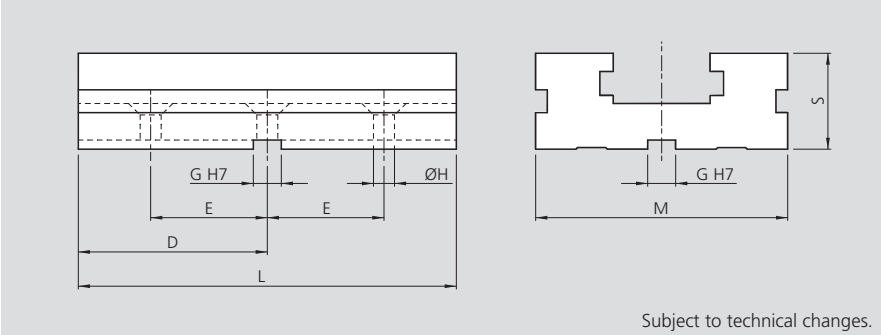

Subject to technical changes.

Type	Id. No.	D [mm]	E [mm]	G [mm]	H [mm]	L [mm]	M [mm]	S [mm]	Weight [kg]
MCi 150	58061700	114	75	18	12.5	228	128	52	8
MCi 200	58071700	140	100	18	12.5	280	168	66	18

MCi double fixed support with jaw

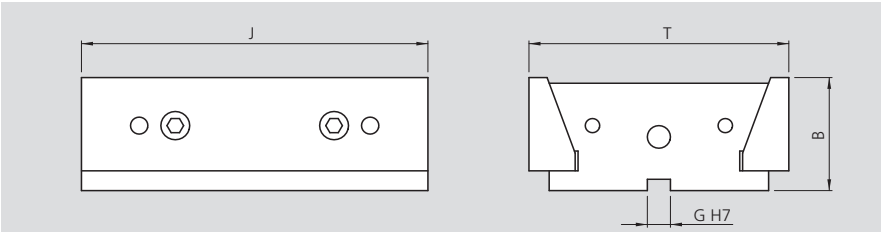

Subject to technical changes.

Type	Id. No.	B [mm]	G [mm]	J [mm]	T [mm]	Weight [kg]
MCi 150	58167210	50	12	150	103	5
MCi 200	58177210	70	18	200	140	15

MCi complete extension element with pair of positioning keys

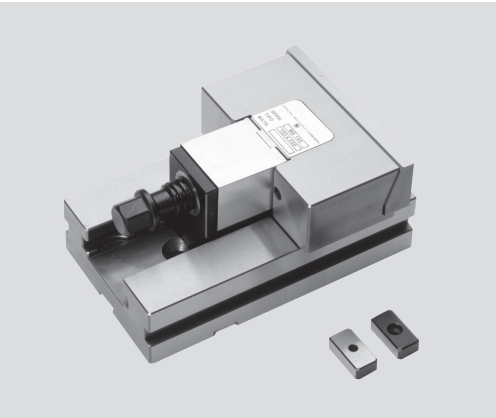

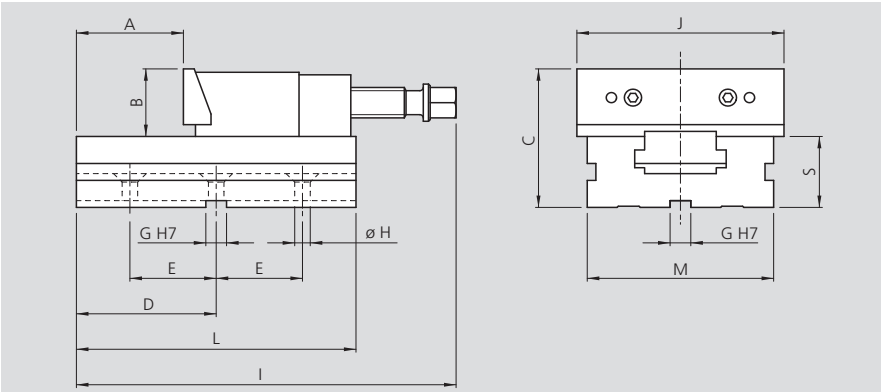

Subject to technical changes.

Type	Id. No.	A [mm]	B [mm]	C [mm]	D [mm]	E [mm]	G [mm]	H [mm]	I [mm]	J [mm]	L [mm]	M [mm]	S [mm]	Weight [kg]
MCi 150	58067110	100	50	102	114	75	18	12.5	295	150	228	128	52	14.5
MCi 200	58077110	120	70	136	140	100	18	12.5	370	200	280	168	66	34.5

MCi base with fixed support with jaw complete with pair of positioning keys

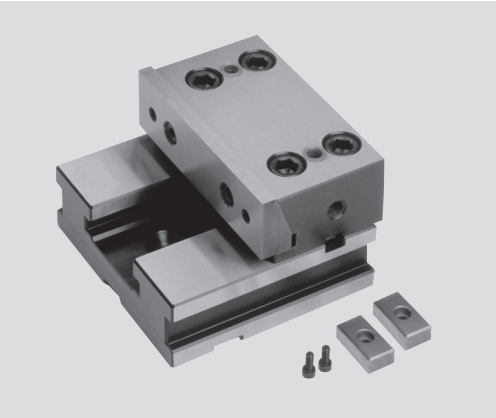

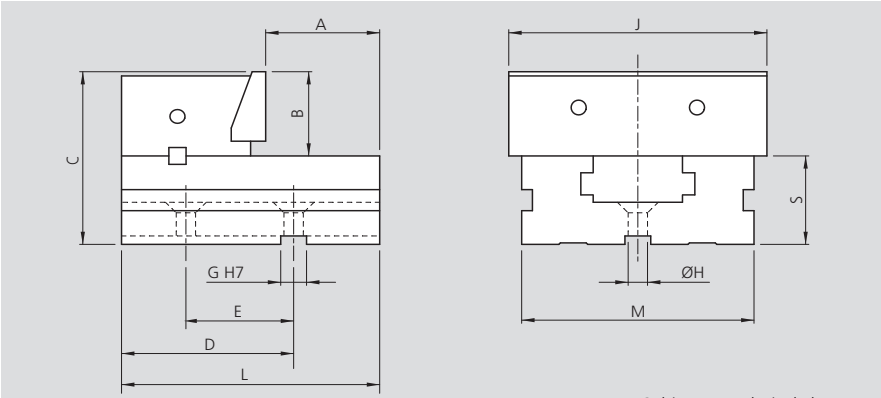

Subject to technical changes.

Type	Id. No.	A [mm]	B [mm]	C [mm]	D [mm]	E [mm]	G [mm]	H [mm]	J [mm]	L [mm]	M [mm]	S [mm]	Weight [kg]
MCi 150	58067010	85	50	102	120	75	18	12.5	150	170	128	52	9.5
MCi 200	58077010	96	70	136	150	100	18	12.5	200	205	168	66	22

MCi base with double fixed support with jaw complete with pair of positioning keys

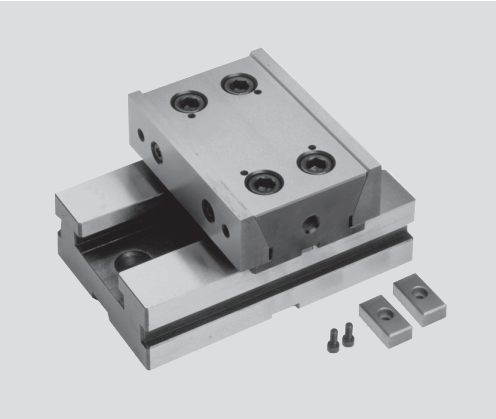

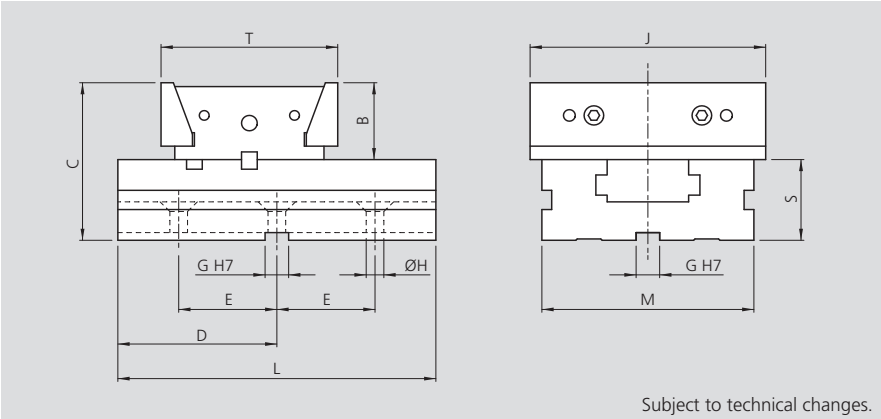

Subject to technical changes.

Type	Id. No.	B [mm]	C [mm]	D [mm]	E [mm]	G [mm]	H [mm]	J [mm]	L [mm]	M [mm]	S [mm]	T [mm]	Weight [kg]
MCi 150	58167010	50	102	100	75	18	12.5	150	200	128	52	103	13
MCi 200	58177010	70	136	125	100	18	12.5	200	250	168	66	140	40

Modular, vertical clamping system

MVS-MCi

- Quick positioning for the jaw
- Maximum flexibility

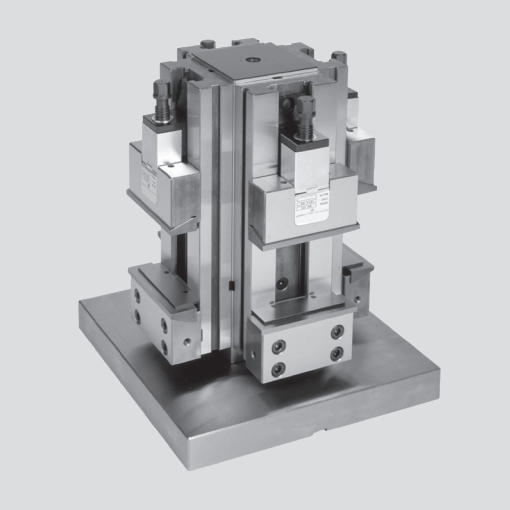

Application/customer benefits

- Steel tombstone ready to use on horizontal machining centres, including 4 MCi vises
- Quick positioning for the movable jaw
- Maximum flexibility due to the wide range of accessories

Technical features

- 2 different jaw sizes
- Pull-down jaws (0.2 mm)
- Parallel stripes with quick change „CLAK-System“ see page 295
- Interface for JIS pallets and for zero point clamping systems APS / WPS / ZeroAct (on request)

Standard equipment

Vertical clamping system complete with: 4 clamping equipment MCi, 1 column, 1 base for vertical system MCi, 4 pairs of SinterGrip jaws, 4 pairs of CLAK parallels, 4 covers for protection of the screws 4 rigid slide-ways, 4 workstops, 4 wrenches, eye bolt for lifting, transport box

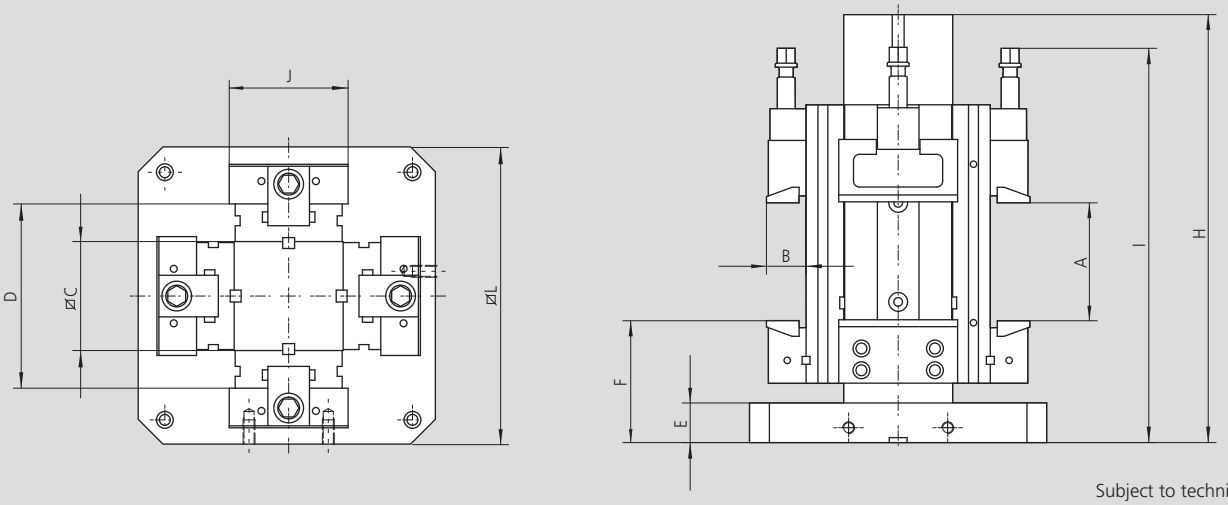

Subject to technical changes.

Order review

Type	Id. No.	A [mm]	B [mm]	C [mm]	D [mm]	E [mm]	F [mm]	H [mm]	I [mm]	J [mm]	L [mm]	Weight [kg]
MVS-MCi 150 x 200	77582621	200	50	150	254	40	146	580	545	150	400	249
MVS-MCi 150 x 250	77582622	250	50	150	254	40	146	580	595	150	400	257
MVS-MCi 150 x 300	77582623	300	50	150	254	40	146	580	650	150	400	267
MVS-MCi 150 x 200	77582631	200	50	150	254	40	146	580	545	150	500	276
MVS-MCi 150 x 250	77582632	250	50	150	254	40	146	580	595	150	500	284
MVS-MCi 150 x 300	77582633	300	50	150	254	40	146	580	650	150	500	294
MVS-MCi 200 x 300	77582731	300	70	200	332	40	159	661	711	200	500	535

MVS-MCi

Modular, vertical clamping system

■ Steel tombstone

Application/customer benefits
- Steel tombstone ready to use on horizontal machining centres

Technical features
- Interface for JIS pallets and for zero point clamping systems APS / WPS / ZeroAct

Standard equipment
Tombstone

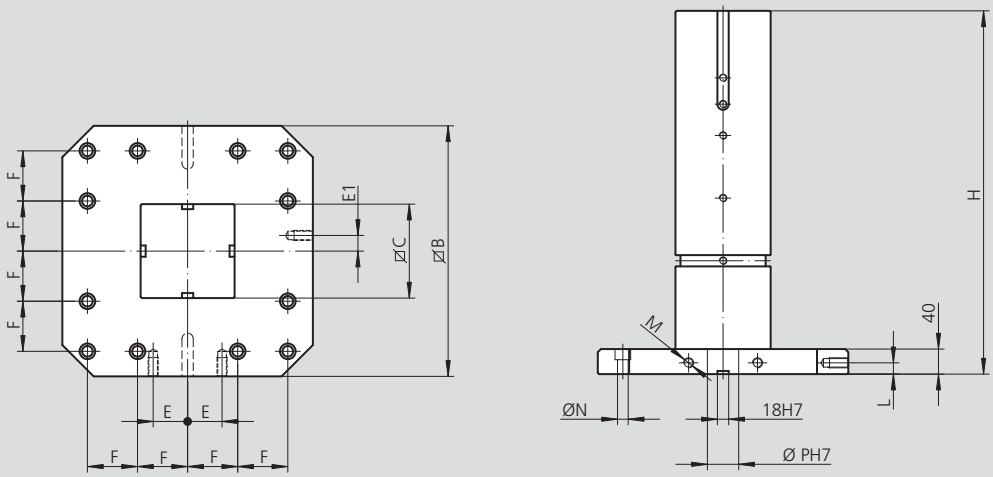

Subject to technical changes.

Order review

Type	Id. No.	B [mm]	C [mm]	E [mm]	E1 [mm]	F [mm]	H [mm]	L [mm]	M [mm]	N [mm]	P [mm]	Weight [kg]
MVS-MCi 150	58228020	400	150	55	25	80	580	18	16	17	50	142
MVS-MCi 150	58228030	500	150	75	25	100	580	18	16	17	50	169
MVS-MCi 200	58238030	500	200	75	25	100	661	18	16	17	50	266

Insert for vertical use

Type	Id. No.
MVS-MCi 150	58223300
MVS-MCi 200	58233300

Modular, vertical clamping system

VCS-MCi

■ Quick positioning for the jaw
■ Maximum flexibility

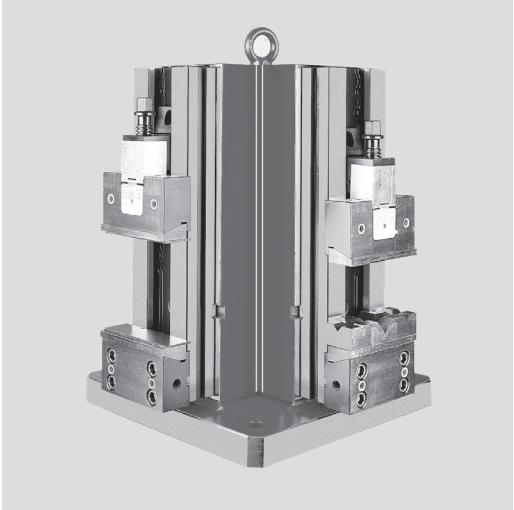

Application/customer benefits

- Steel tombstone ready to use on horizontal machining centres, including 4 MCi vises
- Quick positioning for the movable jaw
- Maximum flexibility due to the wide range of accessories

Technical features

- 2 different jaw sizes
- Pull-down jaws (0.2 mm)
- Parallel stripes with quick change „CLAK-System“ see page 295
- Interface for JIS pallets and for zero point clamping systems APS / WPS / ZeroAct (on request)

Standard equipment

Vertical clamping system complete with: 4 clamping equipment MCi, 1 cross tombstone for vertical system MCi, 4 pairs of SinterGrip jaws, 4 pairs of CLAK parallels, 4 covers for protection of the screws 4 rigid slide-ways, 4 work stops, 4 wrenches, eye bolt for lifting, transport box

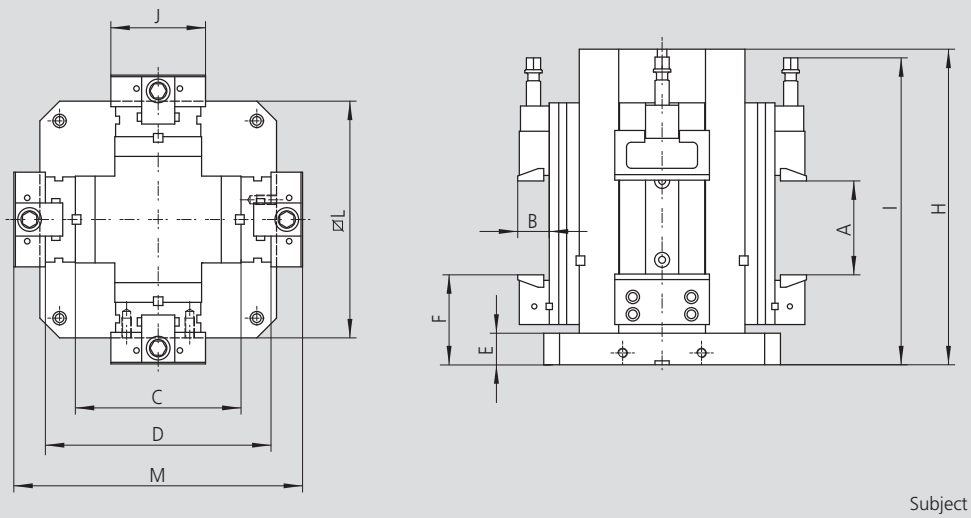

Subject to technical changes.

Order review

Type	Id. No.	A [mm]	B [mm]	C [mm]	D [mm]	E [mm]	F [mm]	H [mm]	I [mm]	J [mm]	L [mm]	M [mm]	Weight [kg]
VCS-MCi 150 x 200	77585621	200	50	300	404	40	140	580	540	150	400	504	314
VCS-MCi 150 x 250	77585622	250	50	300	404	40	140	580	590	150	400	504	322
VCS-MCi 150 x 300	77585623	300	50	300	404	40	140	580	647	150	400	504	332
VCS-MCi 150 x 200	77585631	200	50	300	404	40	140	580	540	150	500	504	342
VCS-MCi 150 x 250	77585632	250	50	300	404	40	140	580	590	150	500	504	350
VCS-MCi 150 x 300	77585633	300	50	300	404	40	140	580	547	150	500	504	360
VCS-MCi 200 x 300	77585741	300	70	350	482	45	168	670	720	200	630	622	627

Working examples

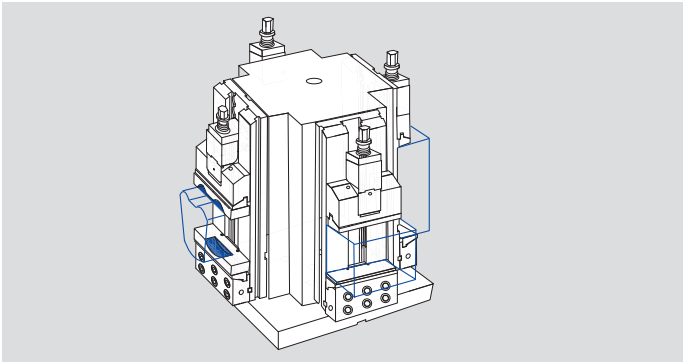

DVCS-MCi

Modular, vertical clamping system

- **Quick positioning for the jaw**
- **Maximum flexibility**

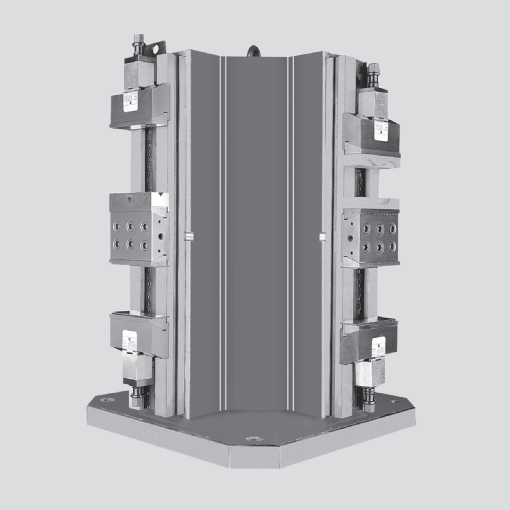

Application/customer benefits

- Ready to use vertical clamping system including 4 MCi vises
- Quick positioning for the movable jaw
- Extra long clamping range
- Maximum flexibility due to the wide range of accessories

Technical features

- Pull-down jaws (0.2 mm)
- Parallel stripes with quick change „CLAK-System“ see page 295
- Optional: Interface for zero point clamping systems APS / WPS / ZeroAct (on request)

Standard equipment

Vertical clamping system complete with: 4 double clamping equipment MCi-DC, 1 cross tombstone XL, 8 pairs parallels with quick change „CLAK-System, 8 covers for protection of the screws, 8 rigid slide-ways, 8 workstops, eye bolt for lifting, 8 wrenches, transport box

Subject to technical changes.

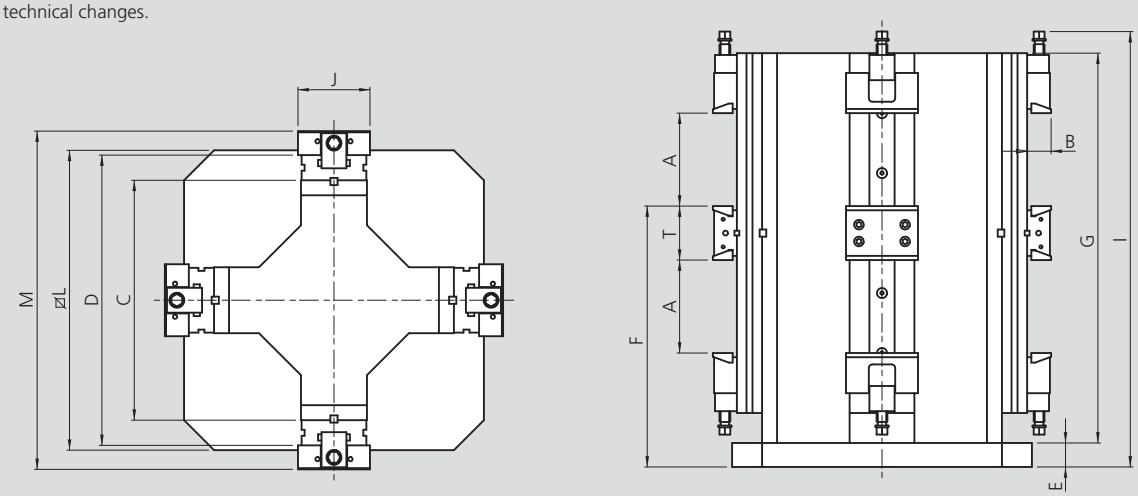

Order review

Type	Id. No.	A [mm]	B [mm]	C [mm]	D [mm]	E [mm]	F [mm]	G [mm]	I [mm]	J [mm]	L [mm]	M [mm]	T [mm]	Weight [kg]
DVCS-MCi 150x200	77586601	200	50	550	654	45	515	795	890	150	630	754	103	680

Cross cube for VCS-TCi; -MCi

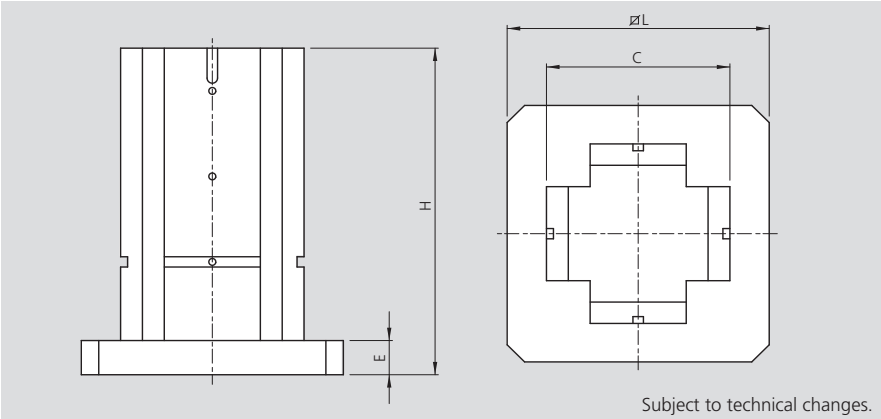

Type	Id. No.	C [mm]	E [mm]	H [mm]	L [mm]	Weight [kg]
VCS 150	58528020	300	40	580	400	212
VCS 150	58528030	300	40	580	500	240
VCS 200	58538040	350	45	670	630	363

Cross cube for DVCS-TCi; -MCi

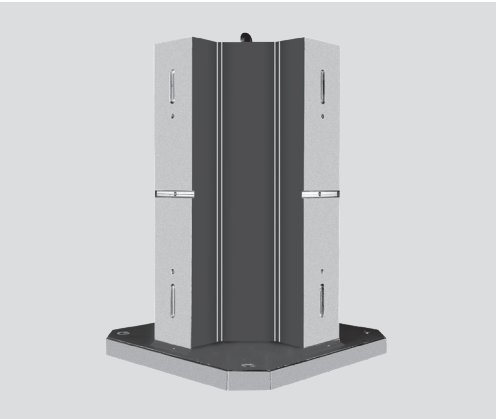

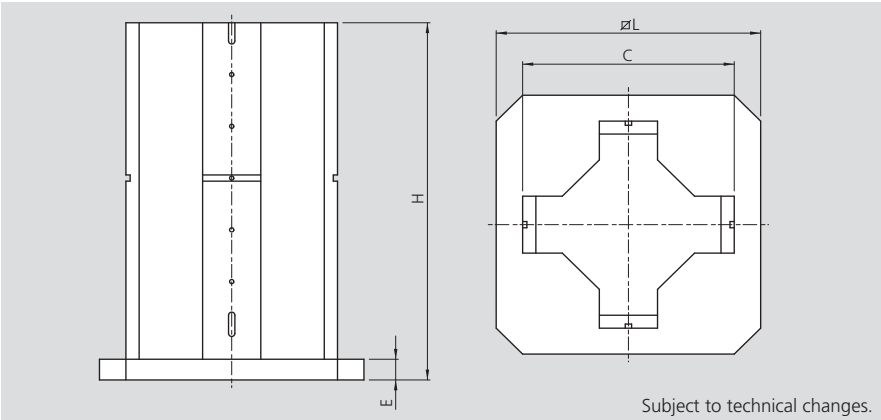

Type	Id. No.	C [mm]	E [mm]	H [mm]	L [mm]	Weight [kg]
DVCS 150	58628000	550	45	840	630	475

Insert for vertical use

Type	Id. No.
MCi 150	58223300
MCi 200	58233300

Clamps (1 pair) incl. screw and T-nut

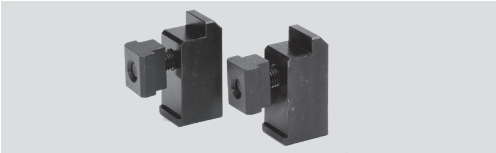

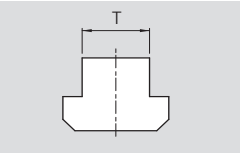

Type	Id. No. / Groove width					
	12 mm	14 mm	16 mm	18 mm	20 mm	22 mm
MCi 150	58022792	58022793	58022794	58022795	58022796	58022797
MCi 200	58032792	58032793	58032794	58032795	58032796	58032797

T-nuts (1 pair) incl. screw

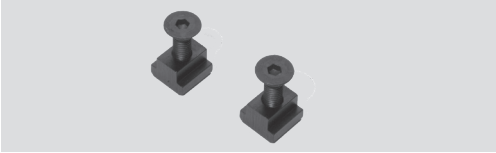

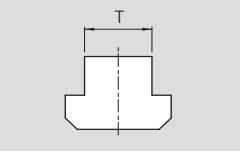

Type	Id. No. / Groove width					
	12 mm	14 mm	16 mm	18 mm	20 mm	22 mm
MCi 150	58022592	58022593	58022594	58022595	58022596	58022597
MCi 200	58032592	58032593	58032594	58032595	58032596	58032597

Key way with standard dimensions (1 pair)

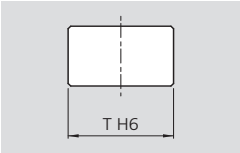

Type	Id. No. / Groove width 12h6 mm
MCi 150	58021395
MCi 200	58021395

Key way with special dimensions (1 pair)

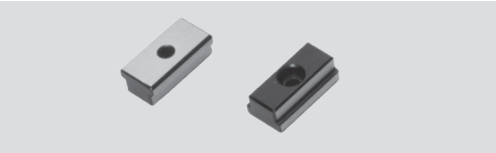

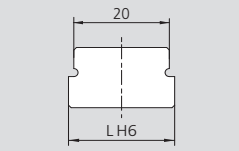

Type	Id. No. / Groove width					
	12h6 mm	14h6 mm	16h6 mm	18h6 mm	20h6 mm	22h6 mm
MCi 150	58021392	58021393	58021394	-	58021396	58021397
MCi 200	58021392	58021393	58021394	-	58021396	58021397

Precision bench vise

CLAK-System

- Parallels for quick change CLAK-System
- Suitable for TCi and MCi vices

This new patented system allows the quick change of parallels, angular parallels, V-jaws, soft jaws for any type of workpieces.

Benefits:

- Reduce downtime and set-up time
- Elimination of clamps and locks thanks to the patented self locking system
- Increase the accuracy of finished parts and reduce scrap

All components are case hardened and precision ground.

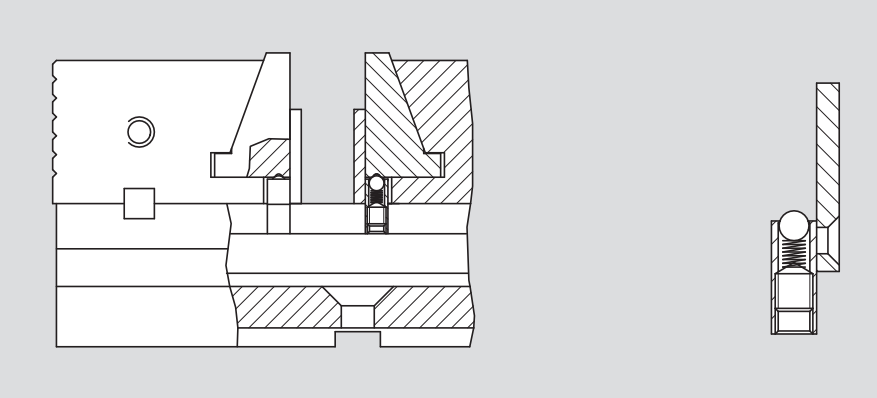

Set 6 pairs of parallels for quick change CLAK-System

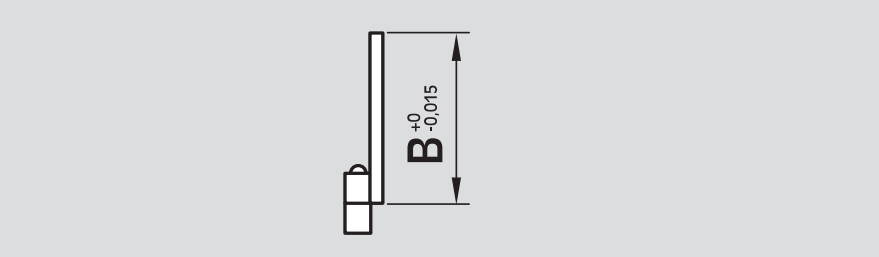

Type	Id. No.	B					
		[mm]	[mm]	[mm]	[mm]	[mm]	[mm]
TCi 110	58019206	10	15	20	25	30	35
TCi / MCi 150	58029206	20	25	30	35	40	45
TCi / MCi 200	58039206	20	30	40	50	60	65

Set 10 pairs of parallels for quick change CLAK-System

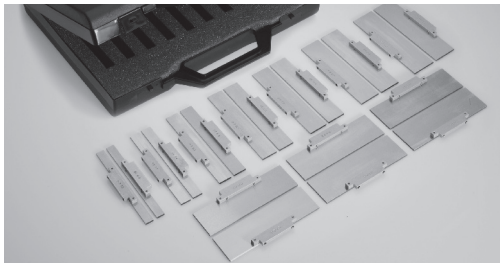

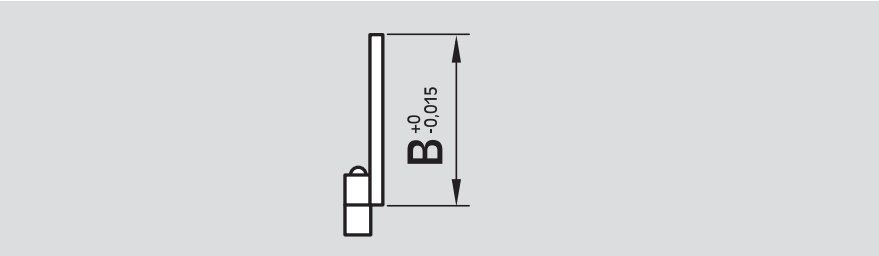

Type	Id. No.	B									
		[mm]	[mm]	[mm]	[mm]	[mm]	[mm]	[mm]	[mm]	[mm]	[mm]
TCi 110	58019210	10	12	15	20	25	28	30	33	35	37
TCi / MCi 150	58029210	12	15	20	25	30	35	40	43	45	47
TCi / MCi 200	58039210	20	25	30	35	40	45	50	55	60	65

Set 6 pairs of prism parallels for quick change CLAK-System

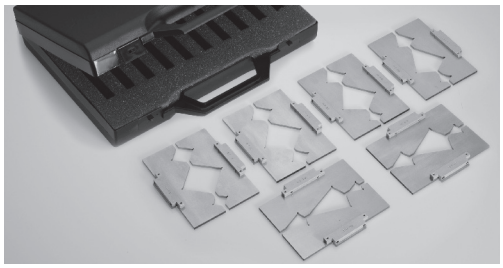

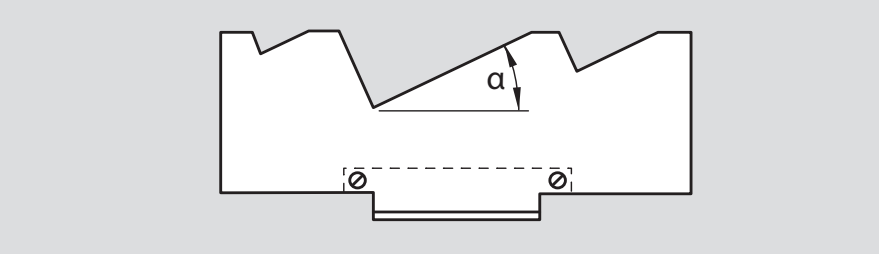

Type	Id. No.	α					
		[mm]	[mm]	[mm]	[mm]	[mm]	[mm]
TCi 110	58019306	20°	25°	30°	35°	40°	45°
TCi / MCi 150	58029306	20°	25°	30°	35°	40°	45°
TCi / MCi 200	58039306	20°	25°	30°	35°	40°	45°

CLAK-System

Precision bench vise

- Parallels for quick change CLAK-System
- Suitable for TCi and MCi vices

Parallels (1 pair)

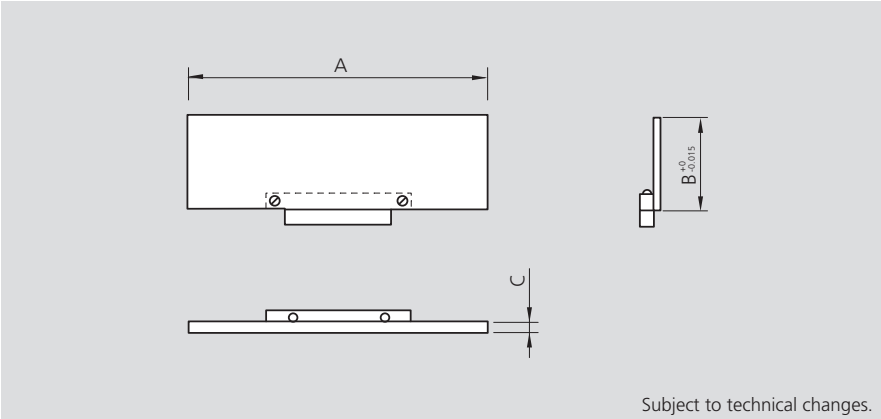

Subject to technical changes.

Type	Id. No.	B [mm]	A [mm]	C [mm]
TCi 110	58013510	10	106	3
TCi 110	58013512	12	106	3
TCi 110	58013515	15	106	3
TCi 110	58013520	20	106	3
TCi 110	58013525	25	106	3
TCi 110	58013528	28	106	3
TCi 110	58013530	30	106	3
TCi 110	58013533	33	106	3
TCi 110	58013535	35	106	3
TCi 110	58013537	37	106	3
TCi 150 / MCi 150	58023512	12	146	3
TCi 150 / MCi 150	58023515	15	146	3
TCi 150 / MCi 150	58023520	20	146	3
TCi 150 / MCi 150	58023525	25	146	3
TCi 150 / MCi 150	58023530	30	146	3
TCi 150 / MCi 150	58023535	35	146	3
TCi 150 / MCi 150	58023540	40	146	3
TCi 150 / MCi 150	58023543	43	146	3
TCi 150 / MCi 150	58023545	45	146	3
TCi 150 / MCi 150	58023547	47	146	3
TCi 200 / MCi 200	58033520	20	196	4
TCi 200 / MCi 200	58033525	25	196	4
TCi 200 / MCi 200	58033530	30	196	4
TCi 200 / MCi 200	58033535	35	196	4
TCi 200 / MCi 200	58033540	40	196	4
TCi 200 / MCi 200	58033545	45	196	4
TCi 200 / MCi 200	58033550	50	196	4
TCi 200 / MCi 200	58033555	55	196	4
TCi 200 / MCi 200	58033560	60	196	4
TCi 200 / MCi 200	58033565	65	196	4

Application examples

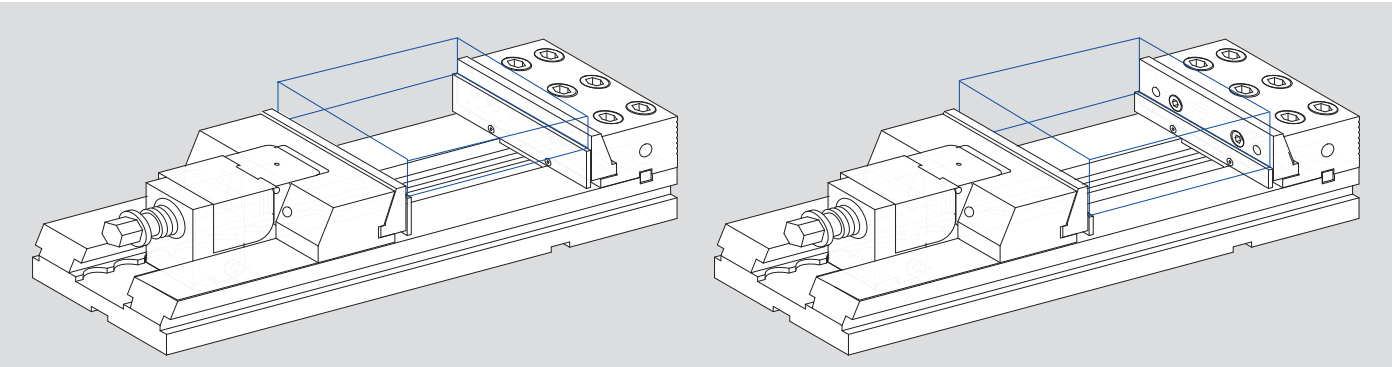

Precision bench vise

CLAK-System

- Parallels for quick change CLAK-System
- Suitable for TCi and MCi vices

Angular parallels (1 pair)

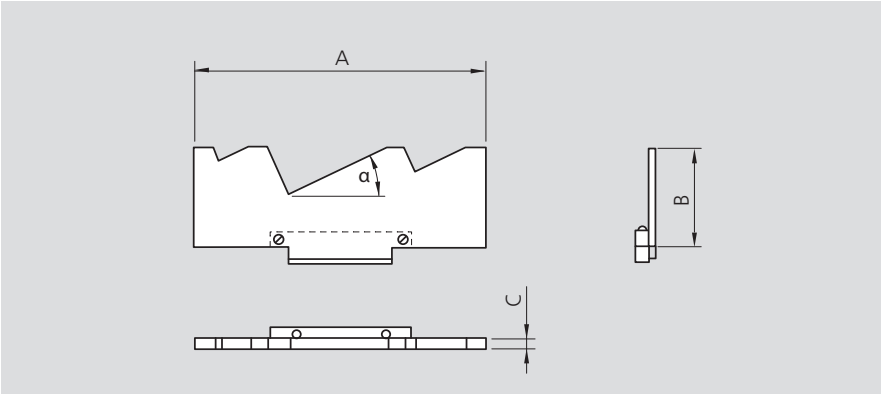

Subject to technical changes.

Type	Id. No.	α [mm]	A [mm]	B [mm]	C [mm]
TCi 110	58013620	20	106	40	4
TCi 110	58013625	25	106	40	4
TCi 110	58013630	30	106	40	4
TCi 110	58013635	35	106	40	4
TCi 110	58013640	40	106	40	4
TCi 110	58013645	45	106	40	4
TCi 150 / MCi 150	58023620	20	146	50	4
TCi 150 / MCi 150	58023625	25	146	50	4
TCi 150 / MCi 150	58023630	30	146	50	4
TCi 150 / MCi 150	58023635	35	146	50	4
TCi 150 / MCi 150	58023640	40	146	50	4
TCi 150 / MCi 150	58023645	45	146	50	4
TCi 200 / MCi 200	58033620	20	196	70	4
TCi 200 / MCi 200	58033625	25	196	70	4
TCi 200 / MCi 200	58033630	30	196	70	4
TCi 200 / MCi 200	58033635	35	196	70	4
TCi 200 / MCi 200	58033640	40	196	70	4
TCi 200 / MCi 200	58033645	45	196	70	4

Application examples

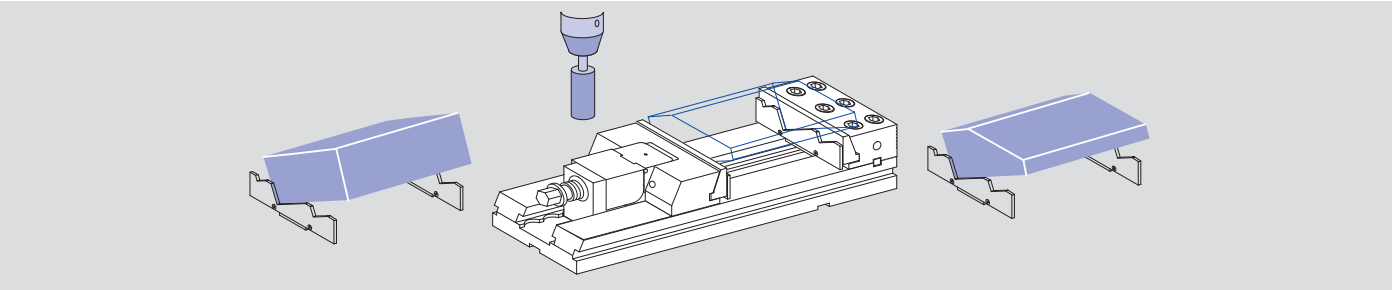

V-jaw

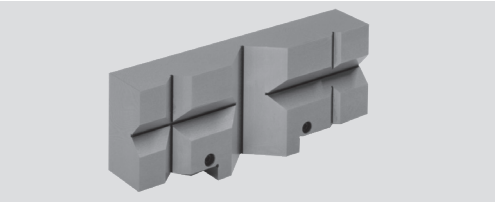

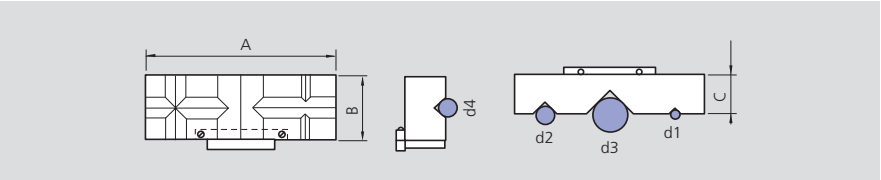

Subject to technical changes.

Type	Id. No.	A [mm]	B [mm]	C [mm]	D1		D2		D3		D4	
					min.-mm	max.-mm	min.-mm	max.-mm	min.-mm	max.-mm	min.-mm	max.-mm
TCi 110	58019409	106	40	30	3	6.5	6.5	15	15	35	7	16
TCi 150 / MCi 150	58029409	146	50	30	3	6.5	6.5	15	15	35	7	16
TCi 200 / MCi 200	58039409	196	70	50	6	13	13	30	30	70	15	35

CLAK-System

Precision bench vise

- Aluminium and steel soft jaws
- Suitable for TCi and MCi vices

Aluminium jaws (1 pair)

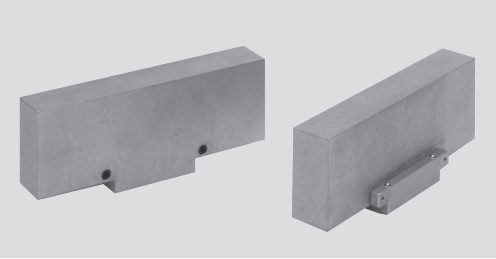

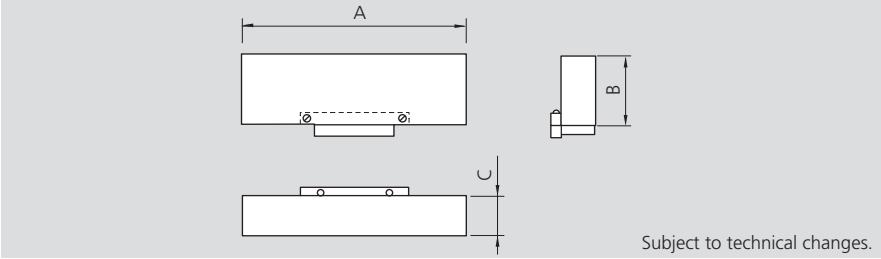

Type	Id. No.	A [mm]	B [mm]	C [mm]
TCi 110	58019509	106	40	19
TCi 150 / MCi 150	58029509	146	50	24
TCi 200 / MCi 200	58039509	196	70	34

Steel soft jaws (1 pair)

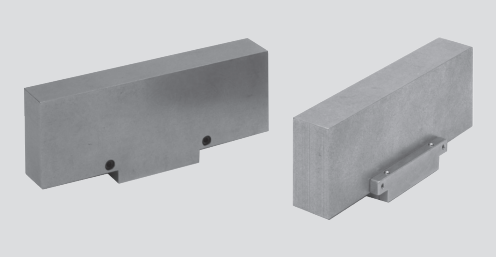

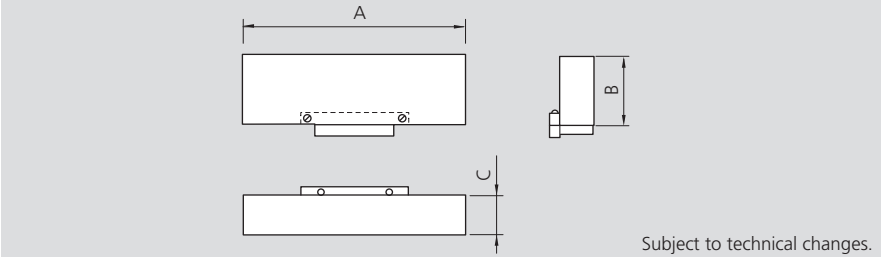

Type	Id. No.	A [mm]	B [mm]	C [mm]
TCi 110	58019609	106	40	19
TCi 150 / MCi 150	58029609	146	50	24
TCi 200 / MCi 200	58039609	196	70	34

Application examples

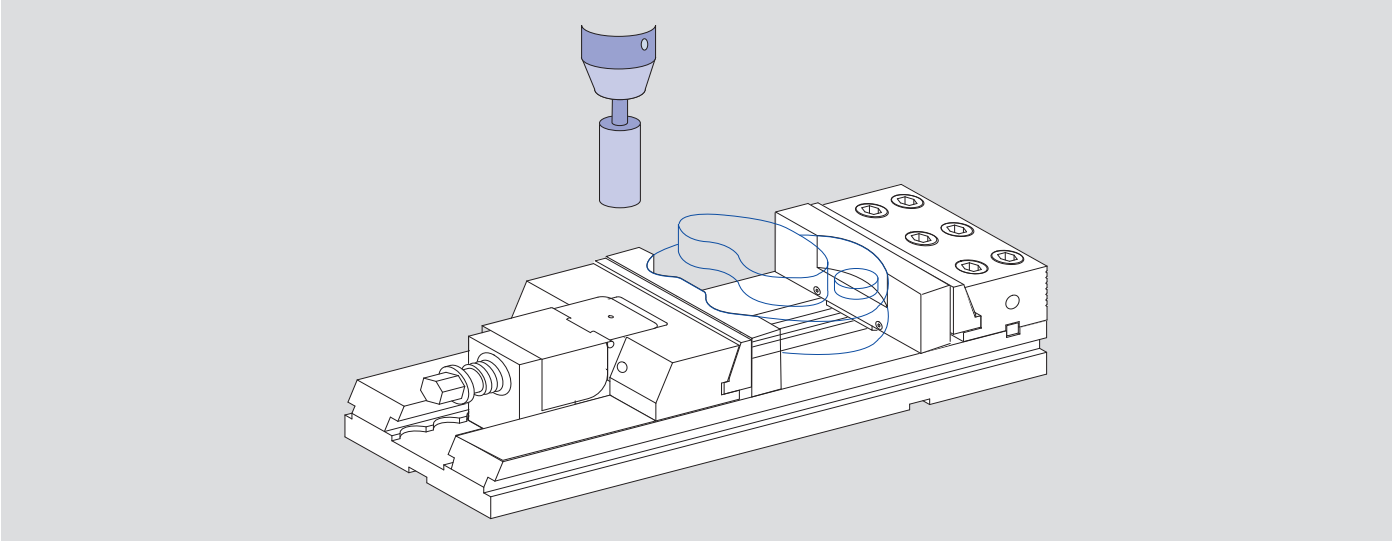

- Jaws CLAK-System
- Suitable for TCi and MCi vices

Middle jaw CLAK-System

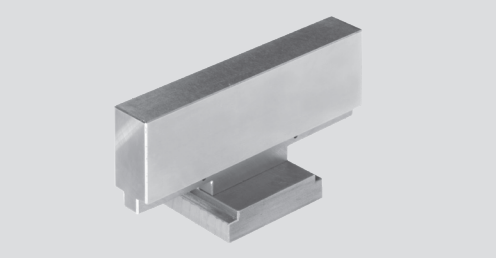

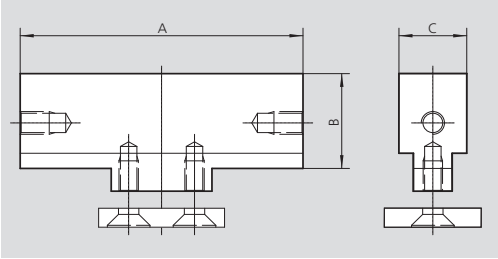

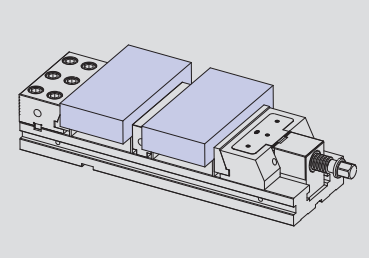

Type	Id. No.	A [mm]	B [mm]	C [mm]
TCi 110	58014109	106	40	32
TCi 150 / MCi 150	58024109	146	50	32
TCi 200 / MCi 200	58034109	196	70	48

Jaw with rolls

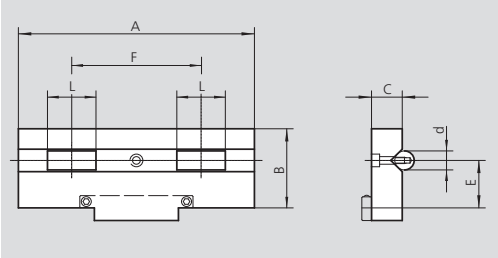

Workpiece with machined surface

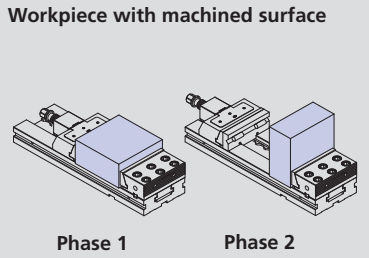

Type	Id. No.	A [mm]	B [mm]	C [mm]	d [mm]	E [mm]	F [mm]	L [mm]
TCi 110	58019709	106	40	19	12	25	60	30
TCi 150 / MCi 150	58029709	146	50	19	12	30	80	30
TCi 200 / MCi 200	58039709	196	70	28	16	40	110	40

Jaws (1 pair) with grippers UGE

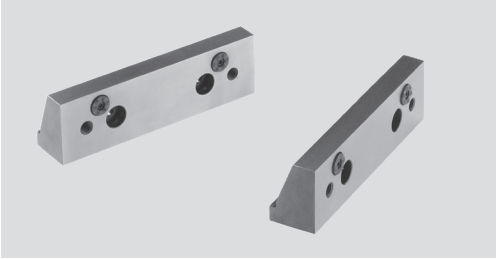

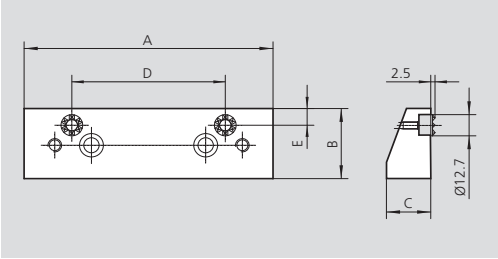

For raw workpieces

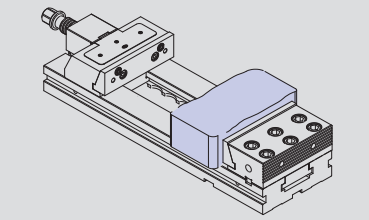

Type	Id. No.	A [mm]	B [mm]	C [mm]	D [mm]	E [mm]
TCi 150 / MCi 150	58024509	146	42	26	90	10
TCi 200 / MCi 200	58034509	196	60	31	160	12

TTi-2G
NC clamping vise

Quick change system of the spindle unit
Disassembling of the spindle unit without tools
Easy and quick cleaning of the vise

1

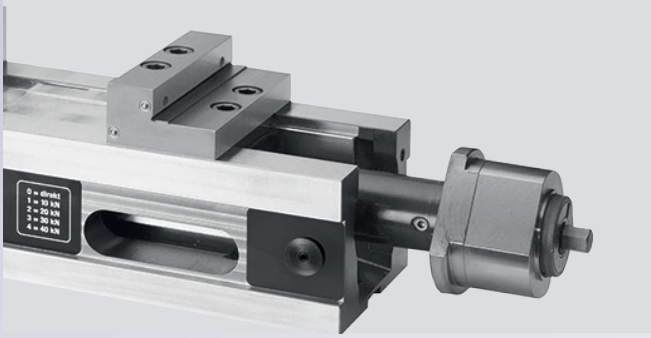

Parallels with quick change system
Mounting of parallels without tools
No penetration of chips below parallels

2

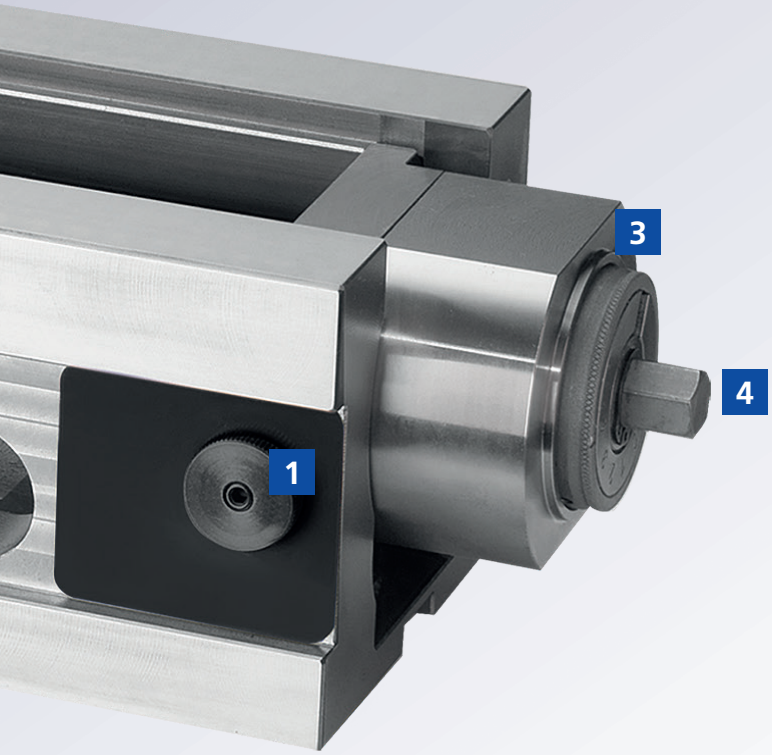

Interface for zero point clamping systems
APS | WPS | ZeroAct
As a standard for highest efficiency while set-up

6

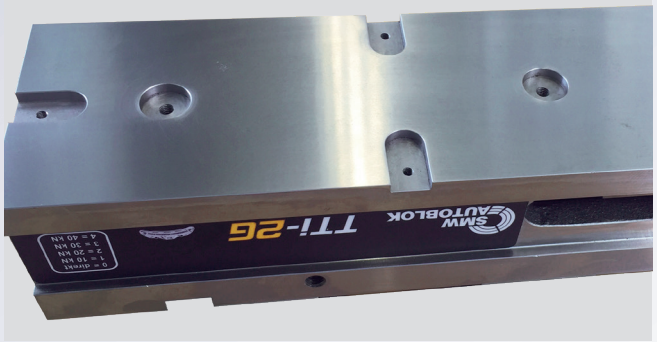

SinterGrip
Jaws for SinterGrip clamping inserts as an accessory
for OP 10 operations available

5

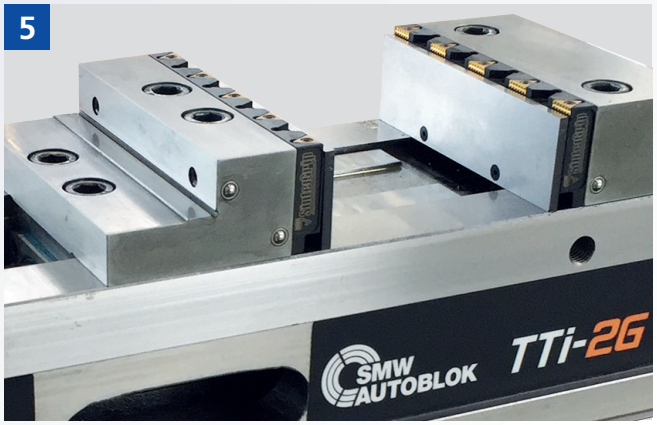

Protected spindle with mechanical power intensifier
Exact pre-select of the clamping force (up to 11 steps)
Constant clamping force for maximum process reliability

3

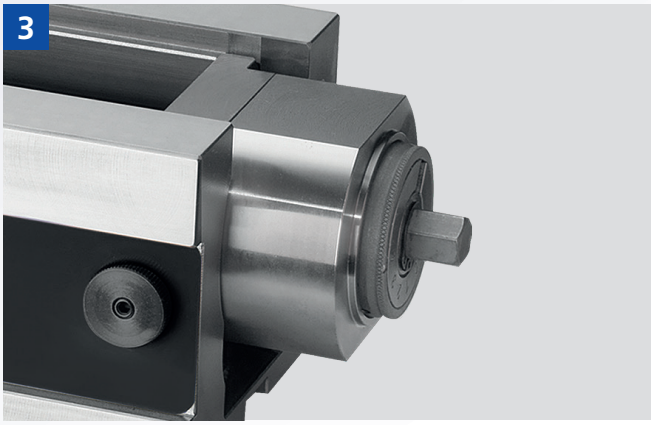

Angle drive (accessory)
Easy use on the machine table
Best accessibility for the setting of the clamping force

4

TTi-2G

NC clamping vise

- With precision power transmitter
- Clamping against fixed jaw

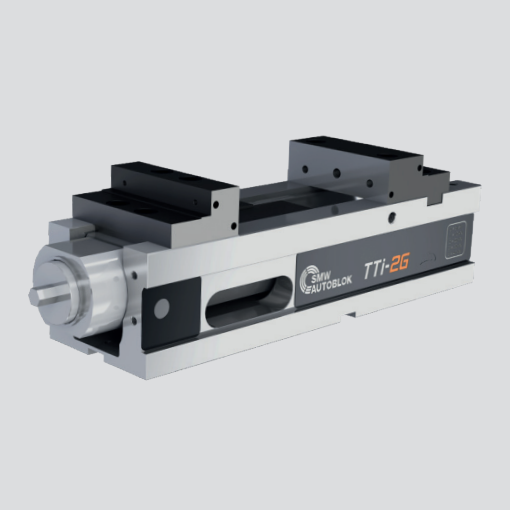

Application/customer benefits

- NC clamping vise with precision power transmitter for high clamping forces
- Maintenance-free encapsulated spindle
- Accurate and highest repeatability of the clamping process
- Easy and quick cleaning possibility
- Maximum flexibility due to the huge range of accessories
- Clamping force pre-adjustment (up to 11 clamping steps)
- Standardized jaw interface (Allmatic compatible)
- Parallels with quick change

Technical features

- High clamping forces (up to 60 kN)
- 3 different sizes
- Precision guideway hardened and ground
- Interface for zero point clamping systems APS / WPS / ZeroAct as a standard

Standard equipment

TTi-2G clamping vise together with hand crank and stepped top jaws, 4 pieces of clamps for fixing

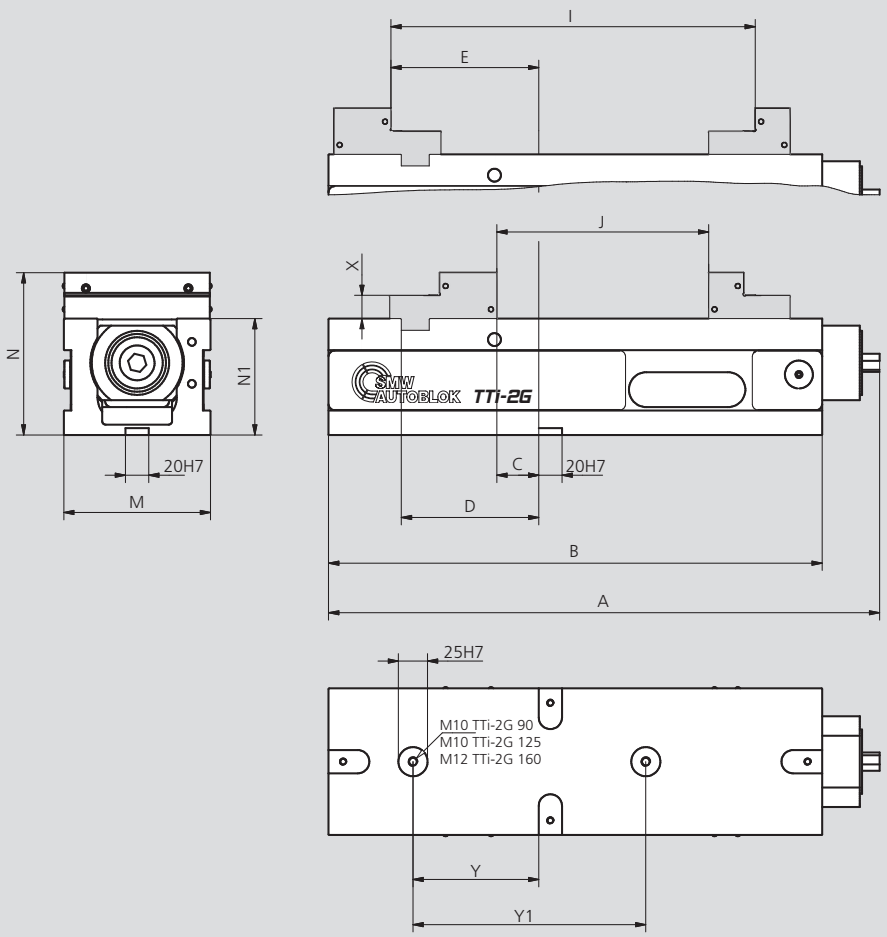

Subject to technical changes.

Order review

Type	Id. No.	A [mm]	B [mm]	C [mm]	D [mm]	E [mm]	J [mm]	I [mm]	M [mm]	N [mm]	N1 [mm]	X [mm]	Y [mm]	Y1 [mm]	Clamping force [kN]	Weight [kg]
TTi-2G 90	462734	340	305	15	73	75	0-126	91-217	90	114	80	16	58	200	28	15
TTi-2G 125	462735	483	424	36	118	127	0-185	131-313	126	139.5	100	20	108	200	40	35
TTi-2G 160	462736	616	560	70	164	178	17-263	187-433	164	164.8	115	25	114	300	60	60

NC clamping vise

TTi-2G

- With precision power transmitter
- Clamping against fixed jaw

Clamping force diagram

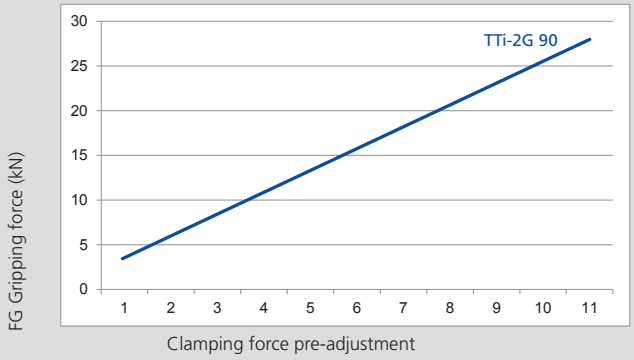

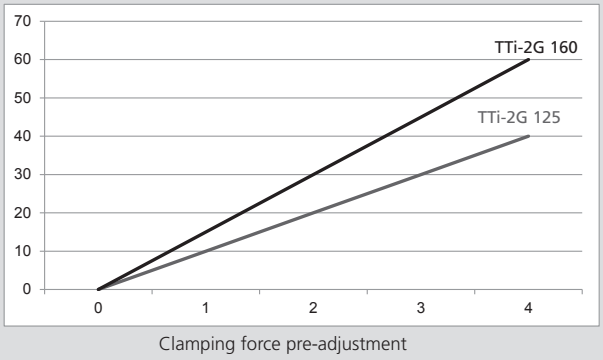

Form, position and dimensional tolerances for all NC clamping vises TTi-2G

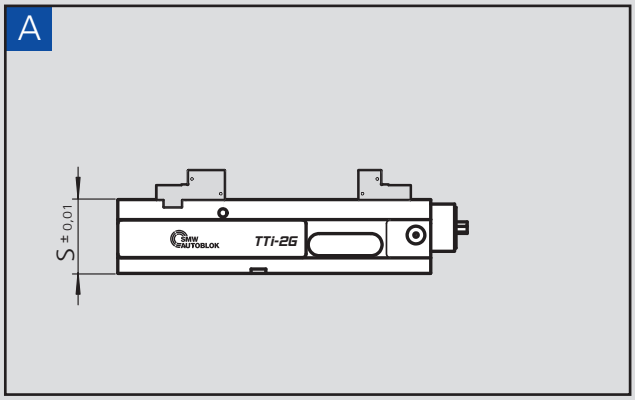

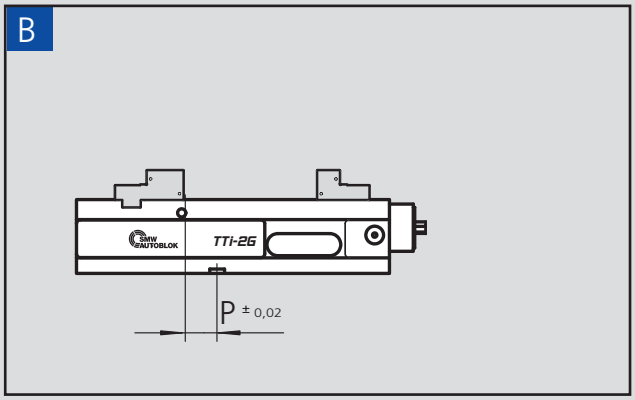

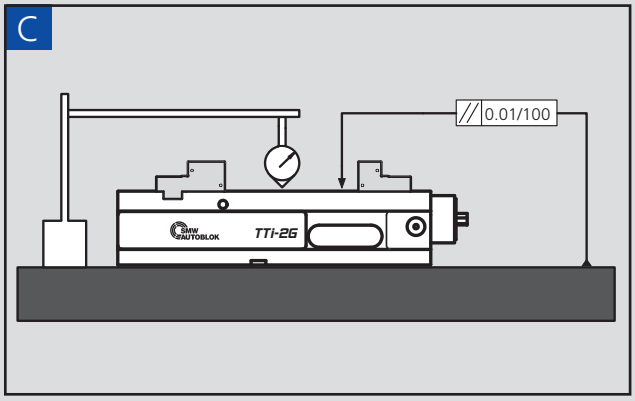

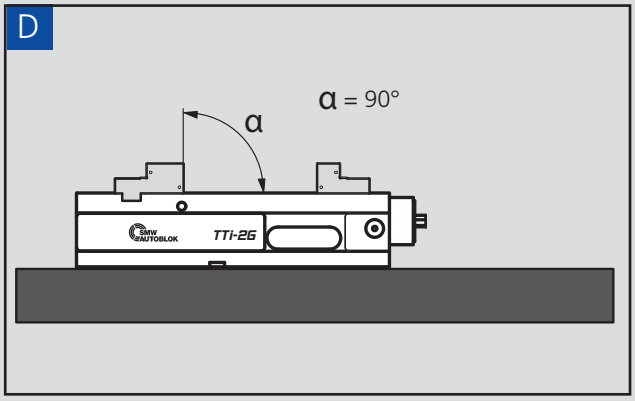

7

Flat clamping jaw hardened and grinded

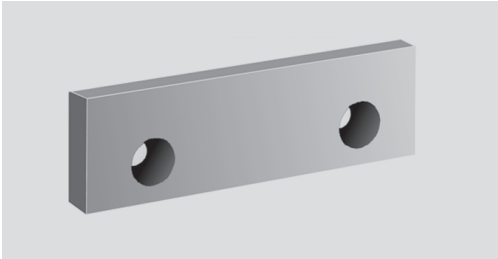

Type	Id. No.	Height [mm]	Depth [mm]
TTi-2G 90	462738	34	10
TTi-2G 125	462739	39.2	12
TTi-2G 160	462740	49.2	16

Consisting of:
1 piece clamping jaw

Flat clamping jaw soft (Material 1.2842)

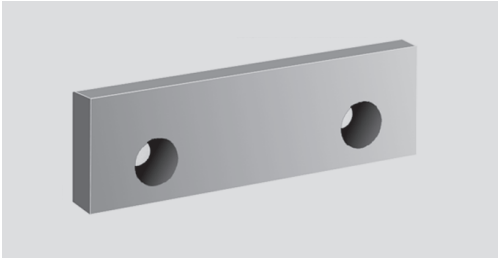

Type	Id. No.	Height [mm]	Depth [mm]
TTi-2G 90	462741	34	12
TTi-2G 125	462742	39.2	12
TTi-2G 160	462743	49.2	16

Consisting of:
1 piece clamping jaw

Clamping jaw with transverse rib

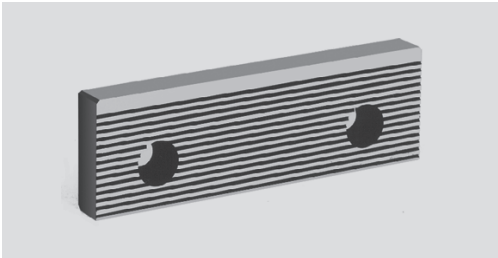

Type	Id. No.	Height [mm]	Depth [mm]
TTi-2G 90	462744	34	10
TTi-2G 125	462745	39.2	12
TTi-2G 160	462746	49.2	16

Consisting of:
1 piece clamping jaw

Level bar with quick change fixing

Type	Id. No.	Height [mm]	Depth [mm]
TTi-2G 90	462747	13	3
TTi-2G 90	462748	22	3
TTi-2G 125	462749	39	3
TTi-2G 125	462750	35	3
TTi-2G 125	462751	15	3
TTi-2G 160	462752	14	3
TTi-2G 160	462753	30	3
TTi-2G 160	462754	44	3

Consisting of:
1 piece level bar

SinterGrip clamping jaw

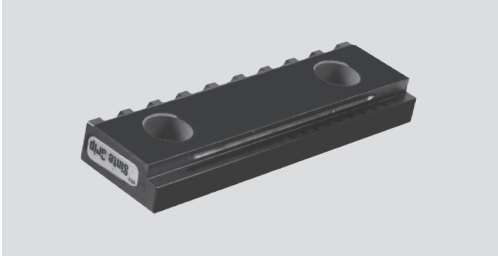

Type	Id. No.	Qty. Sinter-Grip per jaw	Height [mm]	Depth [mm]
TTi-2G 125	462755	9	39.5	12
TTi-2G 160	462756	11	49.8	12

Consisting of:
1 set = 2 pieces; SinterGrip clamping jaw (without clamping inserts)

SinterGrip
Page 116

Flat clamping jaw hardened and grinded

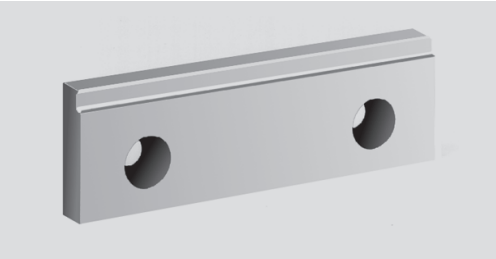

Type	Id. No.	Step [mm]	Height [mm]	Depth [mm]
TTi-2G 125	462757	3 x 6	39.2	12
TTi-2G 125	462758	5 x 10	39.2	12
TTi-2G 160	462759	5 x 8	49.2	16

Consisting of:
1 piece clamping jaw

Grip bar suitable for flat clamping jaws TTi-2G 125

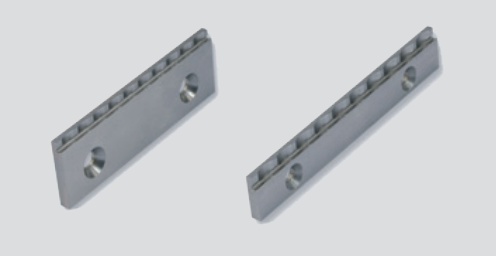

Type	Id. No.	Model	Height [mm]	Step [mm]
TTi-2G 125	462760	High	39.5	1.4 x 4.5
TTi-2G 125	462761	Step	19.5	2 x 4.5

Consisting of:
2 pieces grip bar (1 set)

Clamping jaw with fluting

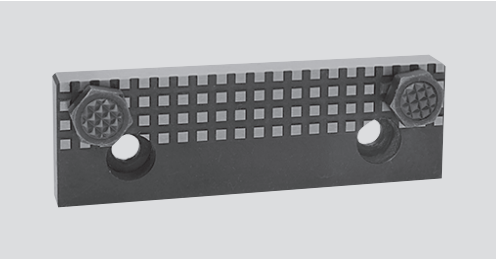

Type	Id. No.	Height [mm]	Depth [mm]	Thread	Id. No. Grippers
TTi-2G 90	462762	34	12	M10	462696
TTi-2G 125	462763	40	12	M10	462696
TTi-2G 160	462764	50	16	M12	462697

Consisting of:
1 piece clamping jaw

Prismatic jaw horizontal and vertical prisma 90°, hardened and grinded

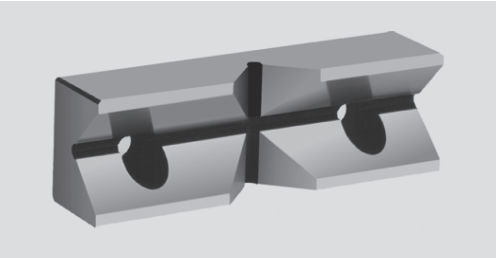

Type	Id. No.	Height [mm]	Depth [mm]	Clamping width in mm	
				1 jaw	2 jaws
TTi-2G 90	462765	36	17	Ø 12-14	Ø 18-42
TTi-2G 125	462766	39.2	28	Ø 15-42	Ø 24-42
TTi-2G 160	462767	49.2	32	Ø 18-50	Ø 28-50

Consisting of:
1 piece clamping jaw

Pull-down jaw with interchangable insert

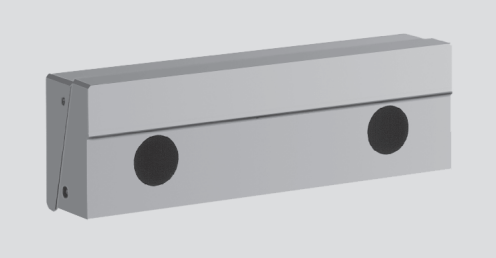

Type	Id. No.	Height [mm]	Depth [mm]
TTi-2G 90	462768	34	24
TTi-2G 125	462769	39.2	25
TTi-2G 160	462770	49.2	28

Consisting of:
1 piece clamping jaw

Pull-down jaw for raw parts with spring blade

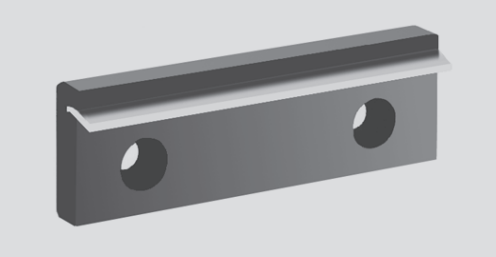

Type	Id. No.	Height [mm]	Depth [mm]
TTi-2G 90	462771	34	18
TTi-2G 125	462772	40	21
TTi-2G 160	462773	50	24

Consisting of:
1 piece clamping jaw

Multi-jaw for grip inserts, pendulum jaws and workstop elements

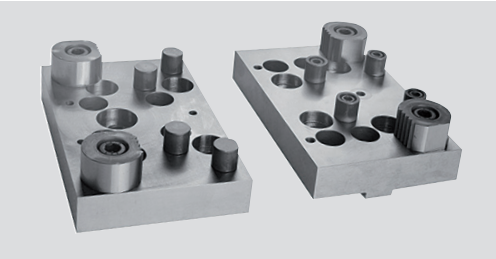

Type	Id. No. Fix jaw	Id. No. Mobil jaw	Id. No. Gripper	Width [mm]	Length [mm]	Height [mm]
TTi-2G 90	462774	462786	462789	90	145	25
TTi-2G 125	462775	462787	462789	105	170	25
TTi-2G 160	462776	462788	462790	115	200	25

Consisting of:
1 piece clamping jaw

Pendulum jaw suitable for multi-jaw (moveable jaw)

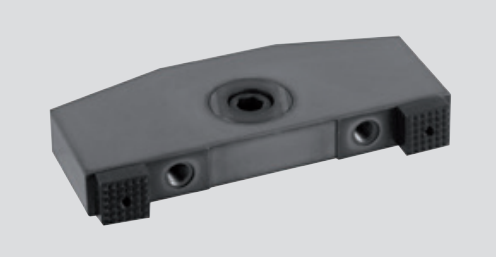

Type	Id. No.	Width [mm]	Length [mm]	Height [mm]
TTi-2G 90	462777	50	141	20
TTi-2G 125	462778	65	156	20
TTi-2G 160	462779	76	196	23

Consisting of:
1 piece clamping jaw

Angle drive for TTi-2G NC clamping vises

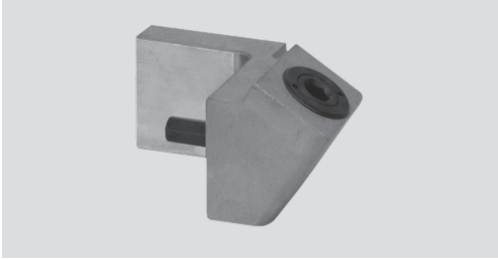

Type	Id. No.	Length [mm]	SW
TTi-2G 90	462780	12	SW 12
TTi-2G 125	462781	33	SW 14
TTi-2G 160	462782	49	SW 14

Consisting of:
1 piece angle drive

Hand crank standard version for TTi-2G NC clamping vises

Type	Id. No.	Length [mm]	SW
TTi-2G 90	462783	160	SW 12
TTi-2G 125	462784	160	SW 14
TTi-2G 160	462785	160	SW 14

Consisting of:
1 piece hand crank

T-nuts with screws

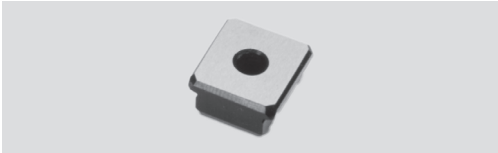

Consisting of:
1 t-nut incl. screw

Type	Id. No.					
	20x12 mm	20x14 mm	20x16 mm	20x18 mm	20x20 mm	20x22 mm
TTi-2G	465118	465119	465120	465121	465122	465123

VCM

NC clamping vise without power transmitter

■ Clamping against fixed jaw

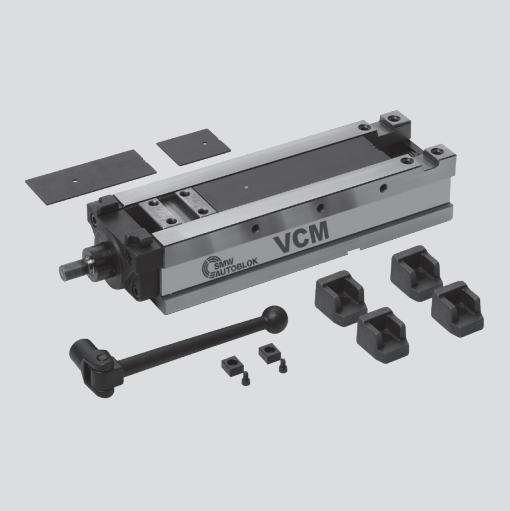

Application/customer benefits

- Accurate and highest repeatability of the clamping process
- Easy and quick cleaning possibility
- Maximum flexibility due to the huge range of accessories

Technical features

- High clamping forces (up to 54 kN)

Standard equipment

VCM clamping vise together with hand crank, protection cover, fitting T-nuts with screws and 4 pieces of claw for fixing

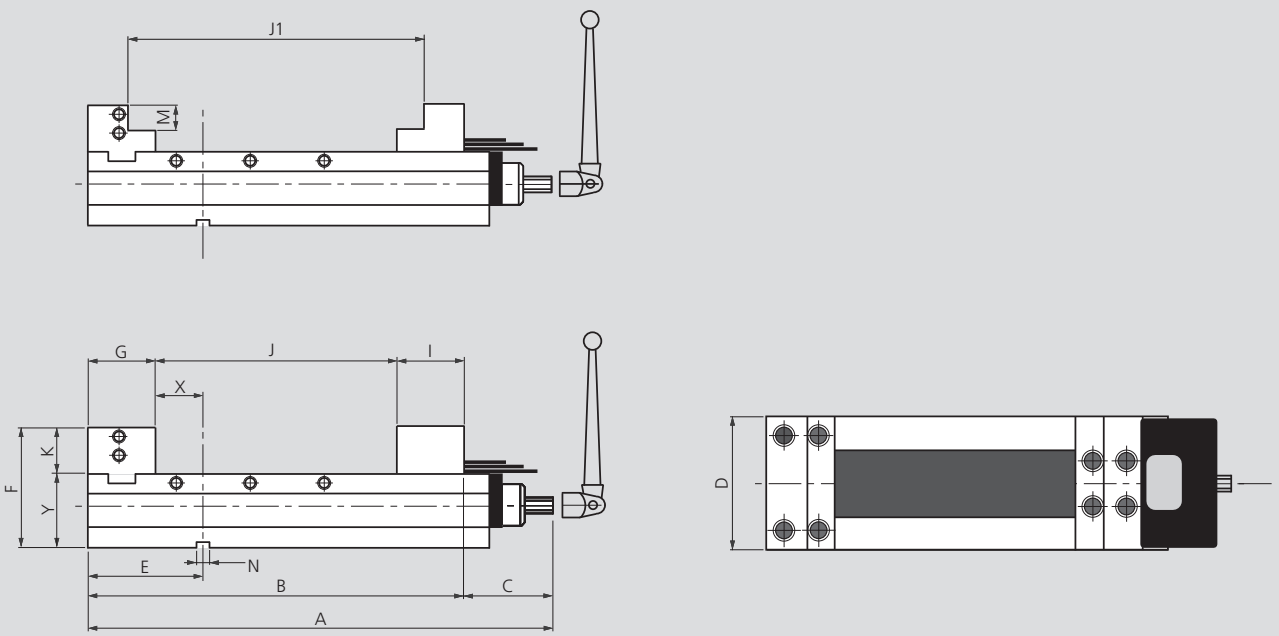

Subject to technical changes.

Order review

Type	Id. No.	A [mm]	B [mm]	C [mm]	D [mm]	E [mm]	F [mm]	G [mm]	J [mm]	J1 [mm]	I [mm]	K [mm]	M [mm]	N [mm]	X [mm]	Y [mm]	Clamp. force [kN]	Weight [kg]
VCM 100	77589060	398	300		101	124	130	78	155	213	64	45	25		45	85	20	22
VCM 130	77589160	508	410	98	131	149	147	83	250	315	74	52	30	18	65	95	40	40
VCM 160	77589260	573	475		161	152	160	86	300	370	86	55	30		65	105	50	62

Clamping force diagram

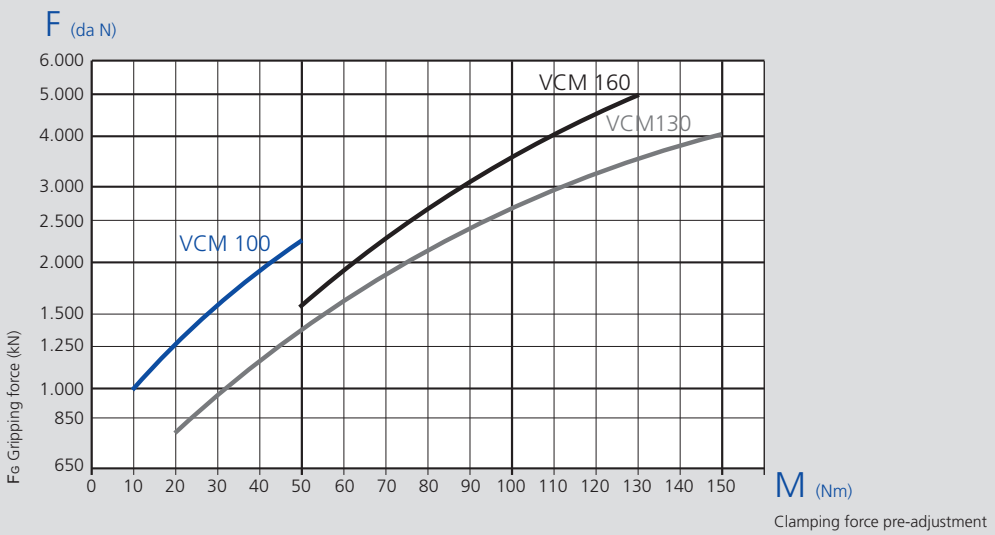

Form, position and dimensional tolerances for all NC clamping vises VCM

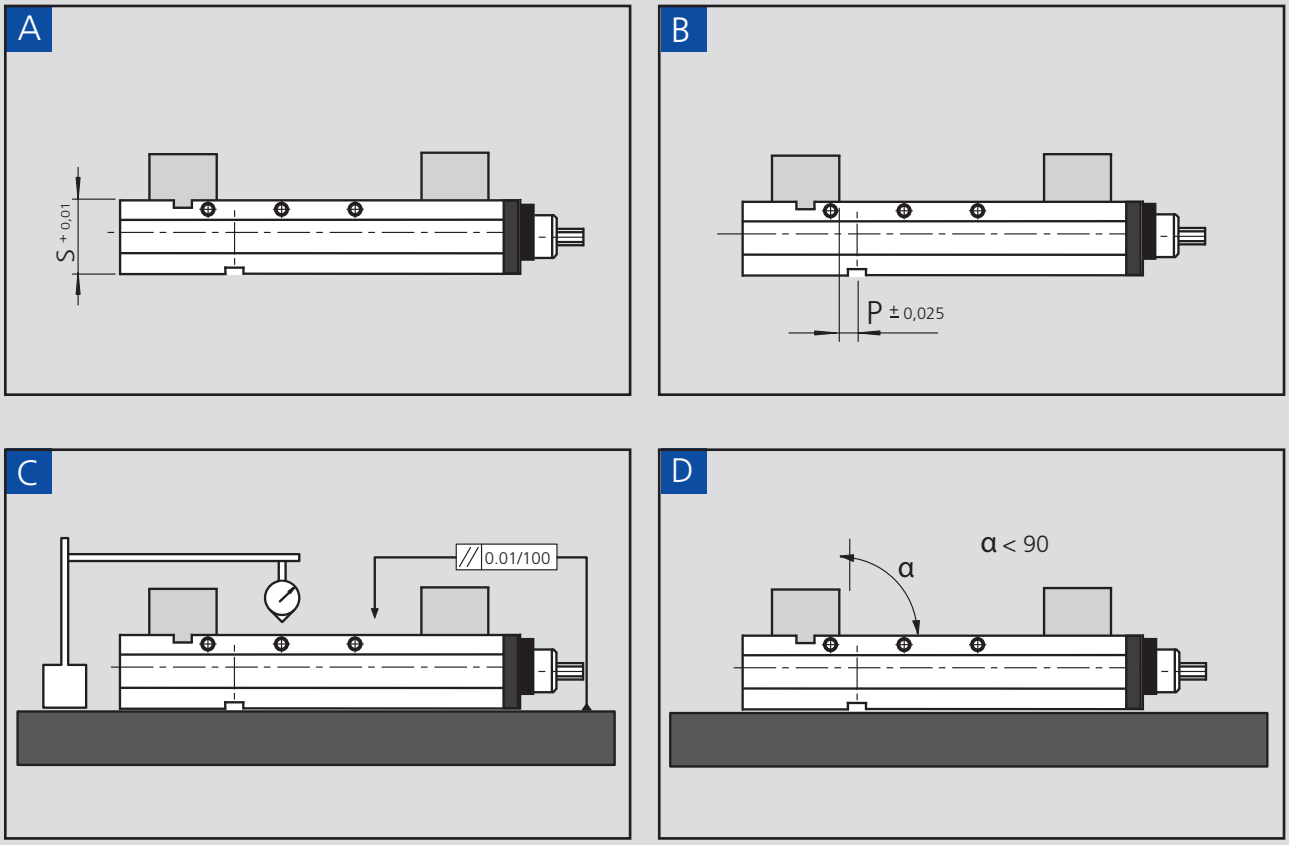

Fixed jaws, set

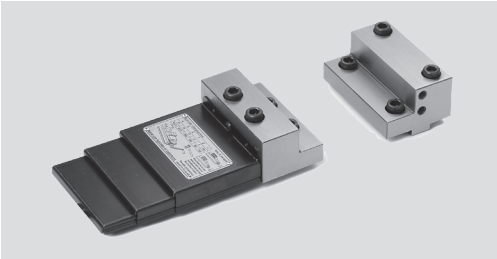

Type	Id. No.
VCM 100	58907110
VCM 130	58917110
VCM 160	58927110

Consisting of:
2 pieces fixed jaws
protective cover

Block jaws, set

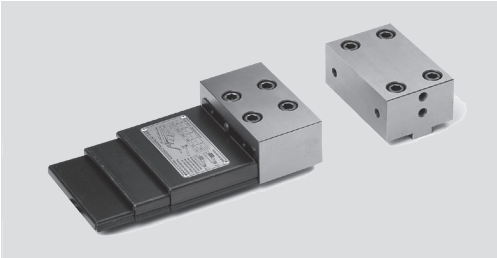

Type	Id. No.
VCM 100	58907210
VCM 130	58917210
VCM 160	58927210

Consisting of:
2 pieces block jaws
protective cover

Jaws for gripper, set

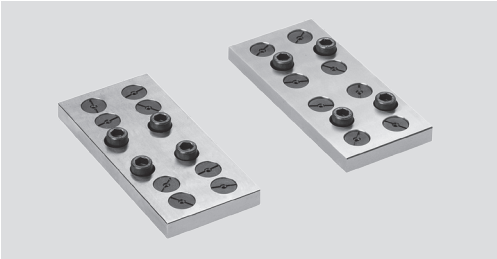

Type	Id. No.
VCM 100	58907310
VCM 130	58917310
VCM 160	58927310

Consisting of:
2 pieces jaws for gripper

Floating jaws for gripper, set

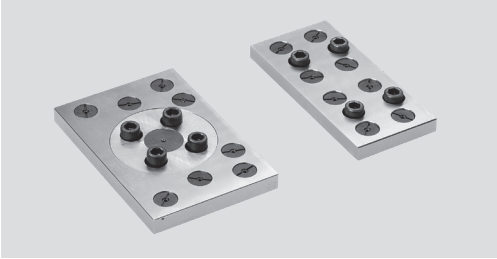

Type	Id. No.
VCM 100	58907320
VCM 130	58917320
VCM 160	58927320

Consisting of:
2 pieces floating jaws for gripper

Stepped jaw, fixed

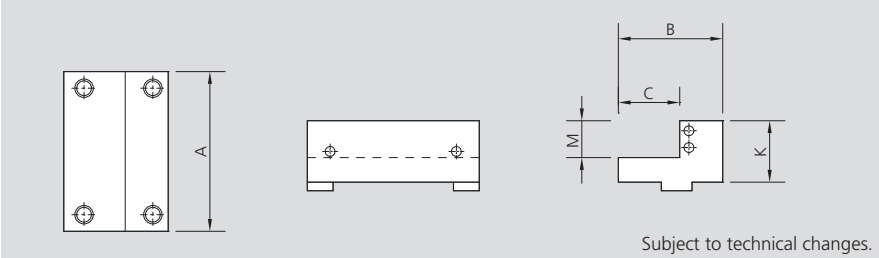

Subject to technical changes.

Type	Id. No.	A [mm]	B [mm]	C [mm]	K [mm]	M [mm]	Weight [kg]
VCM 100	58900210	100	78	32.5	45	25	2
VCM 130	58910210	130	83	35	52	30	3
VCM 160	58920210	160	86	35	95	30	4.2

Stepped jaw, movable incl. protection cover

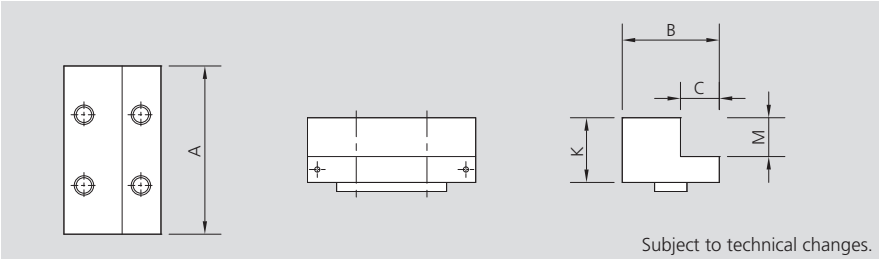

Subject to technical changes.

Type	Id. No.	A [mm]	B [mm]	C [mm]	K [mm]	M [mm]	Weight [kg]
VCM 100	58900310	100	64	26	45	25	1.5
VCM 130	58910310	130	74	30	52	30	2.8
VCM 160	58920310	160	86	35	55	30	4.2

Block jaw, fixed

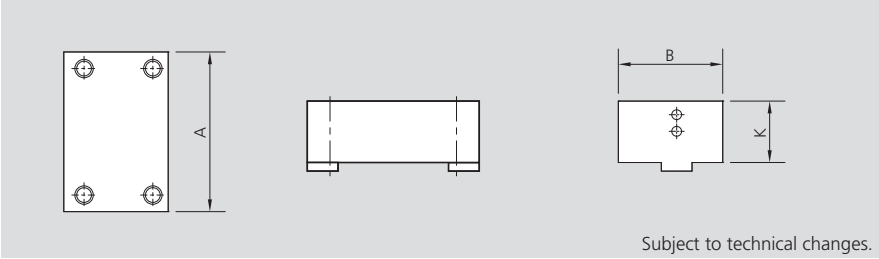

Subject to technical changes.

Type	Id. No.	A [mm]	B [mm]	K [mm]	Weight [kg]
VCM 100	58900220	100	78	45	3.0
VCM 130	58910220	130	83	52	4.0
VCM 160	58920220	160	86	55	6.0

Block jaw, movable incl. protection cover

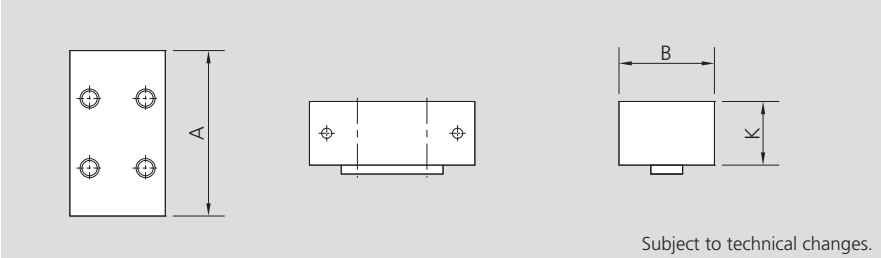

Subject to technical changes.

Type	Id. No.	A [mm]	B [mm]	K [mm]	Weight [kg]
VCM 100	58900320	100	64	45	2.5
VCM 130	58910320	130	74	52	4.5
VCM 160	58920320	160	86	55	6

Fixed jaw for gripper

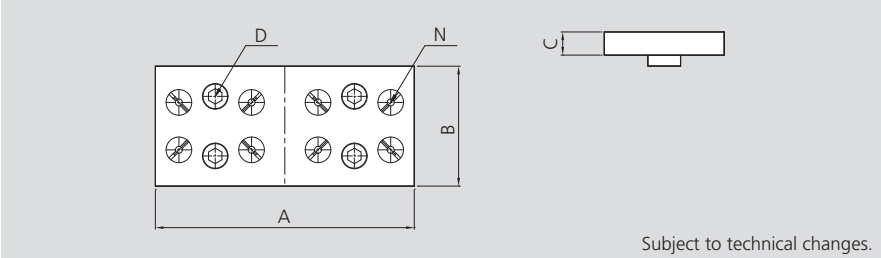

Subject to technical changes.

Type	Id. No.	A [mm]	B [mm]	C [mm]	D	N	Weight [kg]
VCM 100	58900230	160	73	22	M10 x 25	6	1.3
VCM 130	58910230	190	88	22	M12 x 30	8	2.2
VCM 160	58920230	220	88	22	M14 x 30	8	3

Movable jaw for gripper

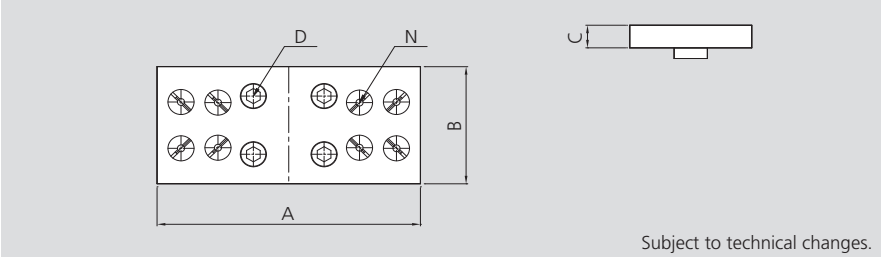

Subject to technical changes.

Type	Id. No.	A [mm]	B [mm]	C [mm]	D	N	Weight [kg]
VCM 100	58900330	160	64	22	M10 x 25	6	1.4
VCM 130	58910330	190	88	22	M12 x 30	8	2.2
VCM 160	58920330	220	88	22	M14 x 30	8	3

Pendulum jaw gripper

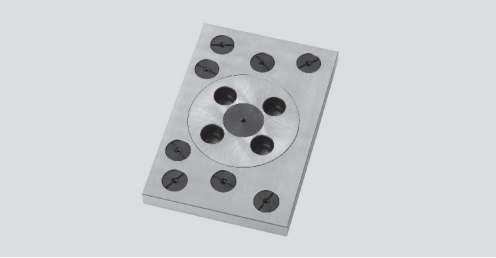

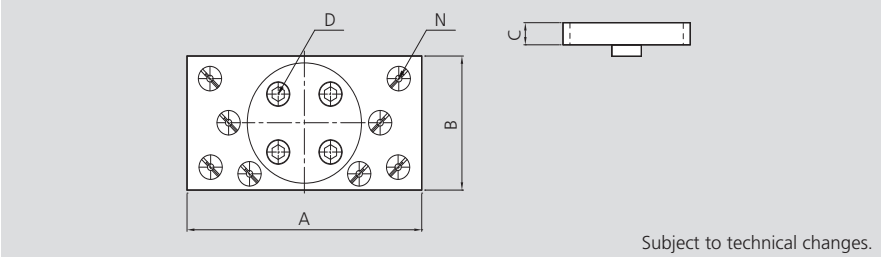

Subject to technical changes.

Type	Id. No.	A [mm]	B [mm]	C [mm]	D	N	Weight [kg]
VCP 100	58900340	160	88	22	M10 x 25 L	6	2.2
VCP 130	58910340	190	103	22	M12 x 30 L	8	3.2
VCP 160	58920340	220	128	22	M14 x 30 L	8	5.7

VCM grip insert smooth, height 11 mm

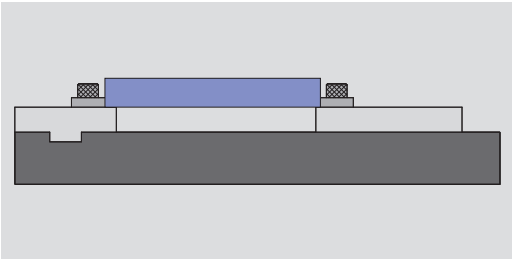

smooth
height 11 mm
set consisting of 4 grippers
and 4 fixing screws

Type	Id. No.
VCM	58906114

VCM grip insert serrated, height 11 mm

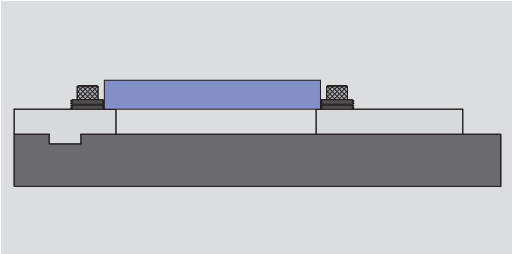

serrated
height 11 mm
set consisting of 4 grippers
and 4 fixing screws

Type	Id. No.
VCM	58906124

VCM grip insert smooth, height 19 mm

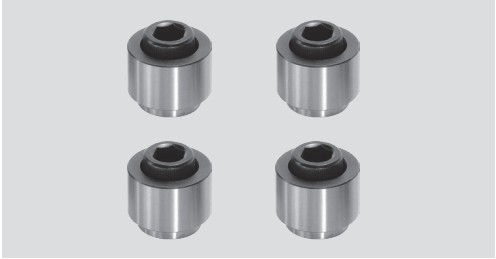

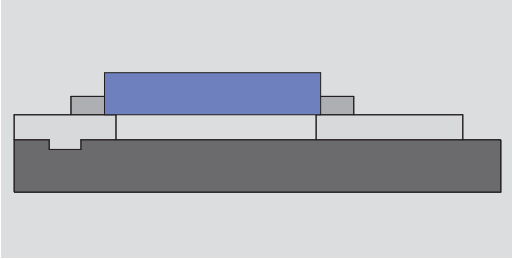

smooth
height 19 mm
set consisting of 4 grippers
and 4 fixing screws

Type	Id. No.
VCM	58906214

VCM grip insert serrated, height 19 mm

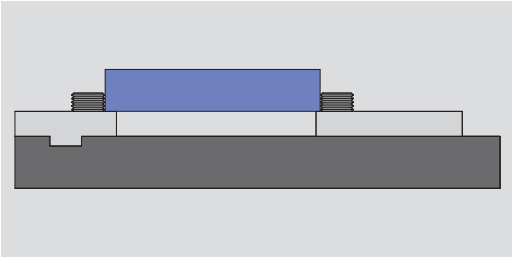

serrated
height 19 mm
set consisting of 4 grippers
and 4 fixing screws

Type	Id. No.
VCM	58906224

VCM Grip insert smooth, height 24 mm

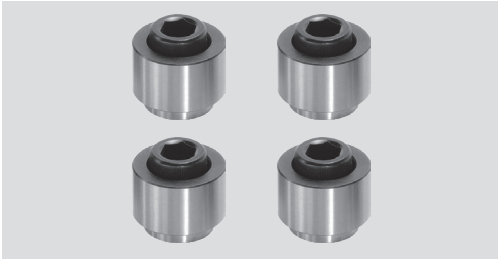

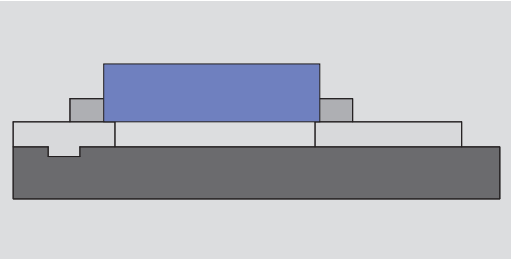

smooth
height 24 mm
set consisting of 4 grippers
and 4 fixing screws

Type	Id. No.
VCM	58906314

VCM Grip insert serrated, height 24 mm

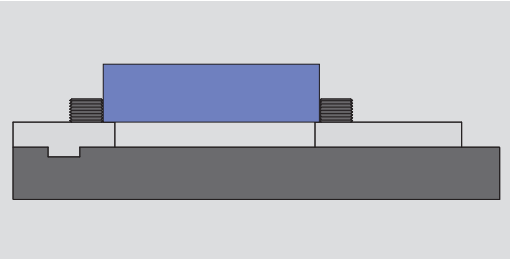

serrated
height 24 mm
set consisting of 4 grippers
and 4 fixing screws

Type	Id. No.
VCM	58906324

VCM Grip insert smooth-serrated, height 11 mm

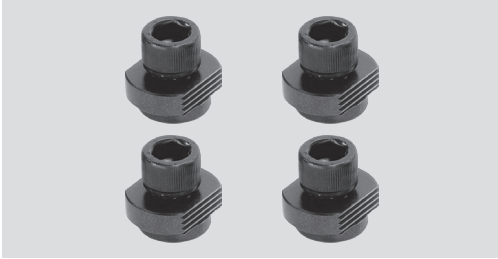

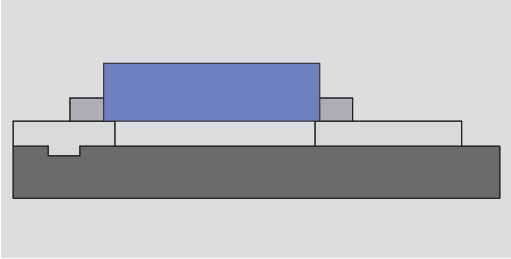

smooth-serrated
height 11 mm
set consisting of 4 grippers
and 4 fixing screws

Type	Id. No.
VCM	58906414

VCM Grip insert smooth, soft, height 25 mm

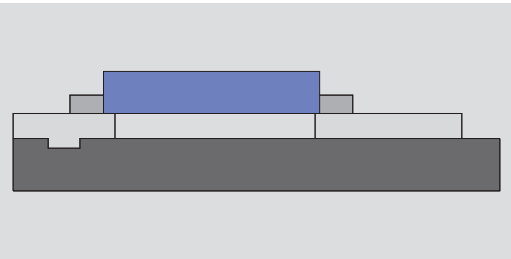

smooth
soft
height 25 mm
set consisting of 4 grippers
and 4 fixing screws

Type	Id. No.
VCM	58906514

VCM grip insert smooth, adjustable, height 50 mm

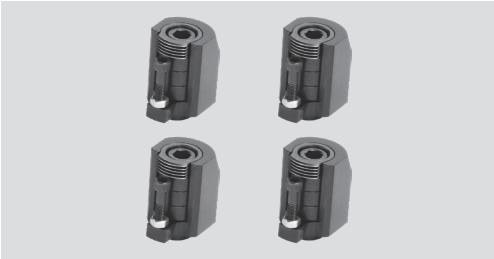

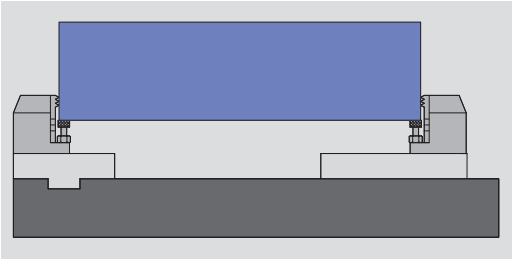

smooth, adjustable
height 50 mm
set consisting of 4 grippers
and 4 fixing screws

Type	Id. No.
VCM	58906724

VCM grip insert smooth, with step, height 50 mm

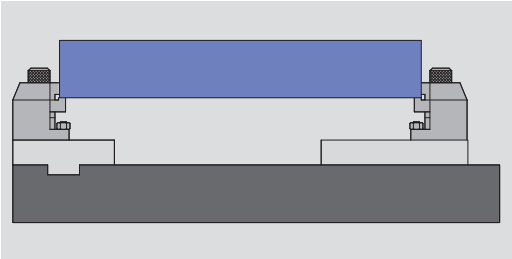

smooth, adjustable
height 50 mm
set consisting of 4 grippers
and 4 fixing screws

Type	Id. No.
VCM	58906814

VCM grip insert serrated, with step, height 50 mm

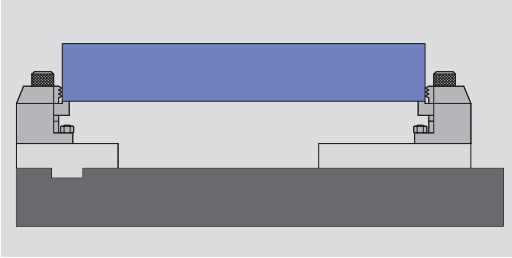

serrated, adjustable
height 50 mm
set consisting of 4 grippers
and 4 fixing screws

Type	Id. No.
VCM	58906824

VCM grip insert smooth, adjustable, height 25 mm

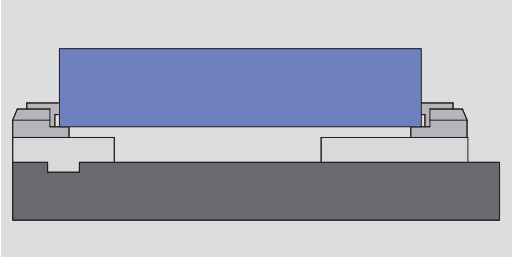

smooth, adjustable
height 25 mm
set consisting of 4 grippers
and 4 fixing screws

Type	Id. No.
VCM	58906614

VCM grip insert serrated, adjustable, height 25 mm

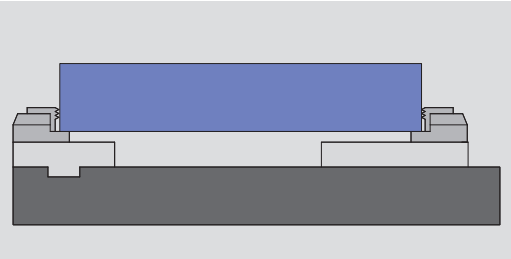

serrated
adjustable
height 25 mm
set consisting of 4 grippers
and 4 fixing screws

Type	Id. No.
VCM	58906624

VCM grip insert adjustable, smooth, height 50 mm

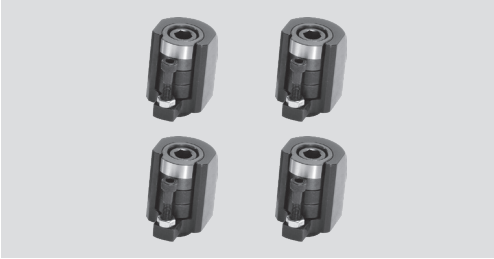

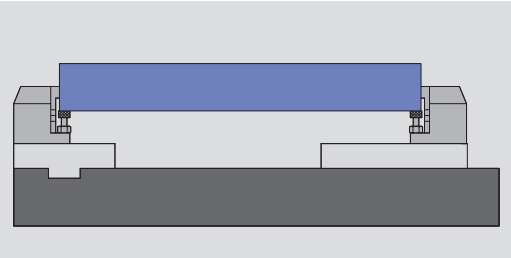

adjustable
smooth
height 50 mm
set consisting of 4 grippers
and 4 fixing screws

Type	Id. No.
VCM	58906714

VCM grip insert, set

Type	Id. No.
VCM	58906009

Consisting of 14 sets, each of 4 pieces grip inserts with fixing screws

Application examples

Hand crank

Type	Id. No.
VCM 100	58901910
VCM 130	58901910
VCM 160	58901910

4 pieces of claws

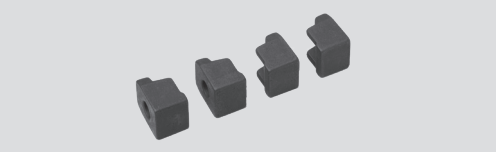

Type	Id. No.
VCM 100	58902709
VCM 130	58902709
VCM 160	58902709

Torque wrench

Type	Id. No.
VCM 100	51501010
VCM 130	51501010
VCM 160	51501010

Fitting T-nuts (1 pair) with screws

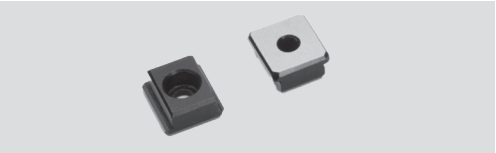

Type	Id. No.					
	18x12 mm	18x14 mm	18x16 mm	18x18 mm	18x20 mm	18x22 mm
VCM	58901392	58901393	58901394	58901395	58901396	58901397

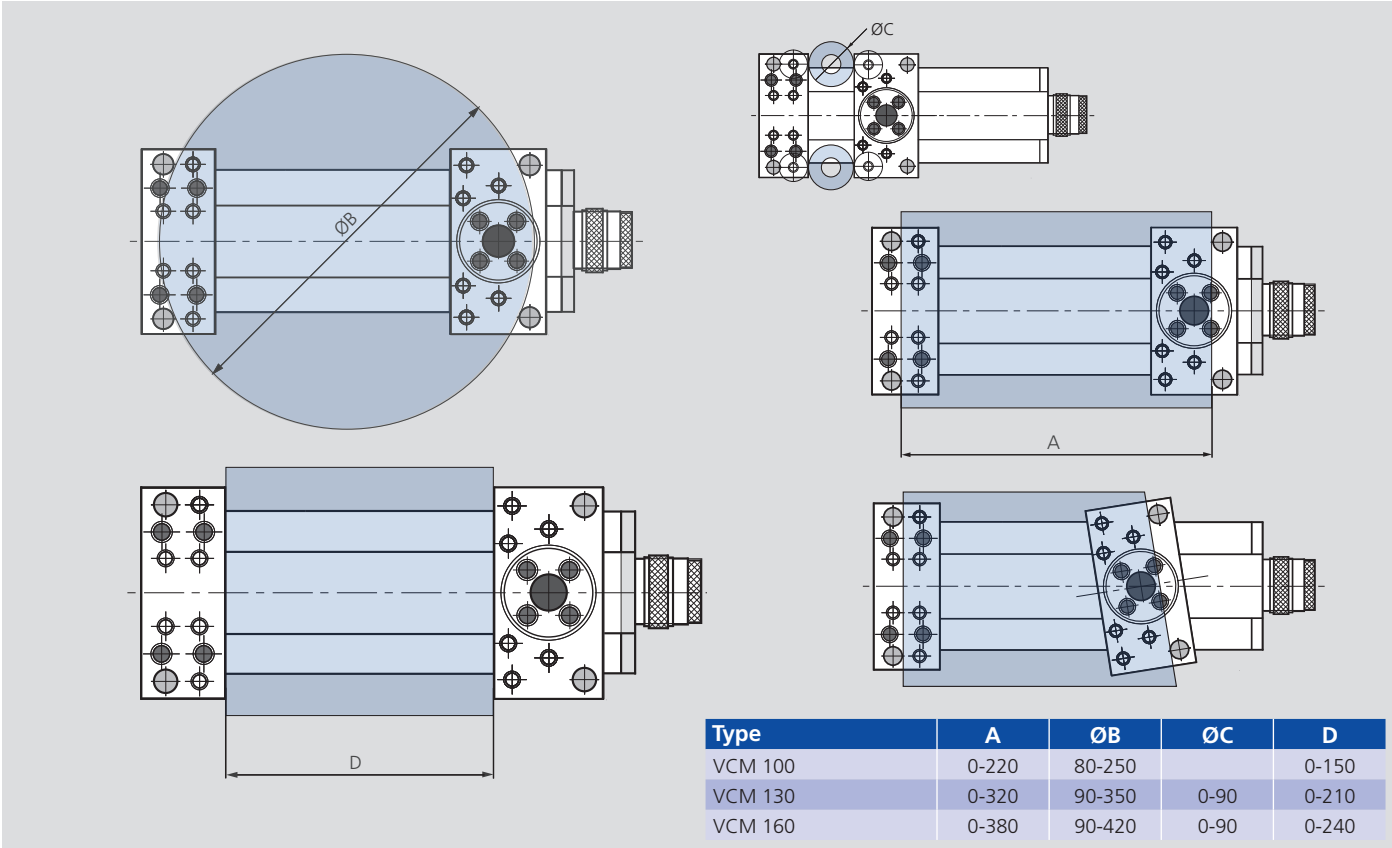

Type	A	ØB	ØC	D
VCM 100	0-220	80-250		0-150
VCM 130	0-320	90-350	0-90	0-210
VCM 160	0-380	90-420	0-90	0-240

Manual chucks from SMW-AUTOBLOK

3-jaw manual chucks are particularly suitable for clamping workpieces in machining centres. The **HG-N**, **HG-NB** and **HG-2G / HG-B-2G** manual chucks feature a built-in quick jaw change system as standard and are available with diameters ranging from 160 to 1000 mm. The quick jaw change system significantly reduces set-up times. The wedge bar design guarantees the highest precision and accuracy.

The **new generation HG-2G / HG-B-2G** is mechanically sealed and low-maintenance. The sealing protects the guideways and inside of the chuck against dirt. The HG-2G / HG-B-2G's optimized innovative lubrication system guarantees a constant clamping force and reduces maintenance intervals. The HG-2G manual chucks are available in sizes ranging from 400 to 1000 mm (additional sizes available on request).

PTF 4-jaw faceplates are suitable for clamping round, square or irregular workpieces. Each individual jaw can be set radially by hand. Clamping forces can be increased many times over through the use of a torque multiplier. The PTF faceplates are also sealed and therefore resistant to dirt. PTF faceplates are available with diameters ranging from 1000 to 2000 mm.

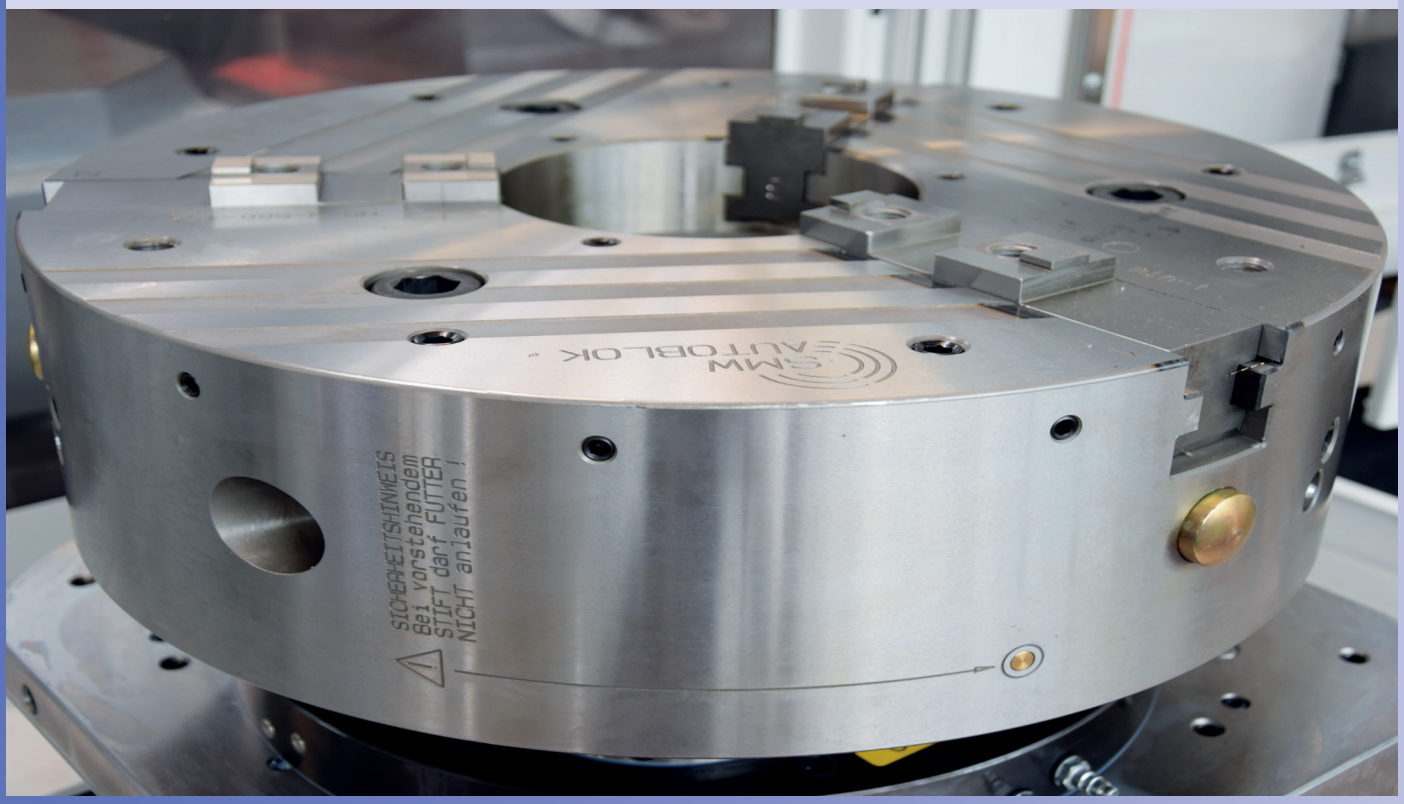

Manual Chucks

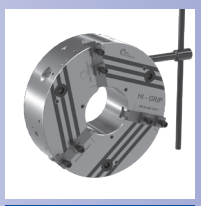

Page 320

HG-N
TONGUE & GROOVE
Jaw system original SMW

Manual chucks Ø 160 - 630 mm

- With through-hole – Quick jaw change
- 3 jaws

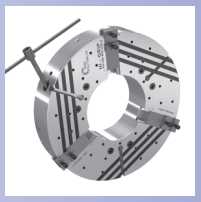

Page 326

HG-NB
TONGUE & GROOVE

Manual chucks Ø 800 - 1000 mm

- With extra large through-hole – Quick jaw change
- All existing top jaws can be used
- 3 jaws

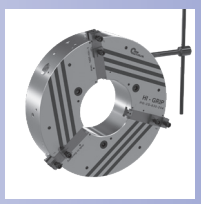

Page 330

HG-2G
TONGUE & GROOVE

Manual chucks Ø 400 - 630 mm

- With through-hole – Quick jaw change
- 3 jaws
- Lubrication channels in the jaw guide ways
- Mechanic sealed – low maintenance

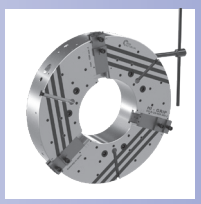

Page 336

HG-B-2G
TONGUE & GROOVE

Manual chucks Ø 800 - 1000 mm

- With extra large through-hole – Quick jaw change
- All existing top jaws can be used
- 3 jaws
- Mechanic sealed – low maintenance

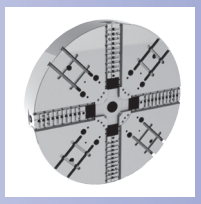

Page 340

PTF
TONGUE & GROOVE
Manual clamping and radial setting of jaws

High precision 4 jaws independent manual chucks Ø 1000 - 2000 mm

- Closed center
- 4 jaws

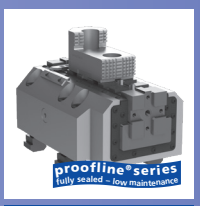

Page 342

JBX
Manual jaw box
Standard mounting dimensions

JBX-2G
Manual jaw box with semi-finished body

High precision, resistance and power manual jaw box

- Accessory for face plates, 4 jaws independent manual or chucks
- Internal or external clamping

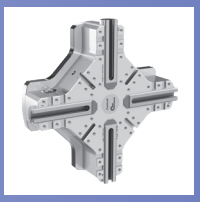

Page 346

Centco4-MLW
INCH
SERRRATION

4-jaw chuck
Ø 400 - 1400 mm

- Independent self centering clamping in 2 axis
- Weight-optimized chuck body
- 4 jaws

Quick jaw change

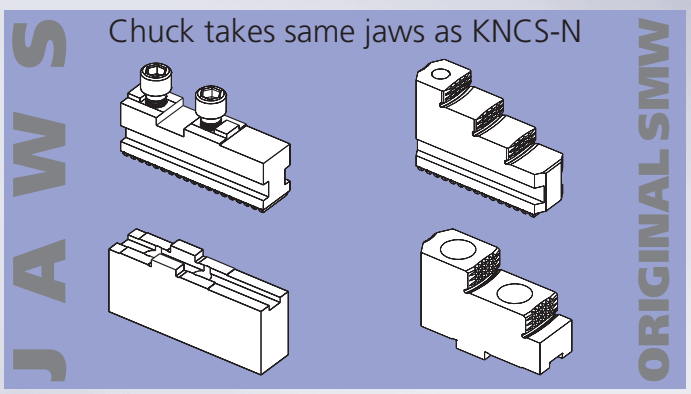

HG-N

- Jaw change in less than 1 minute

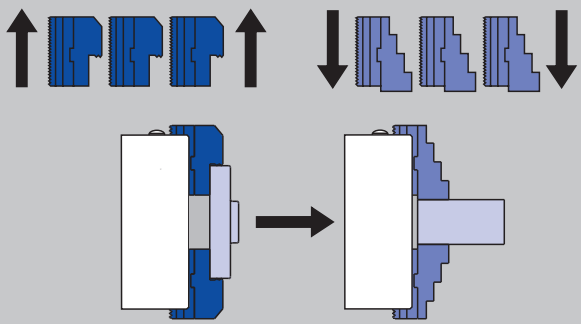

- Universal, because jaws can be radially adjusted and reversed = less jaw sets

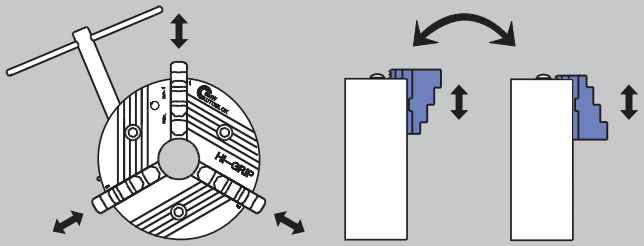

Jaws radially adjustable Jaws 180° reversed

For highest speeds
Flat gripping force curve

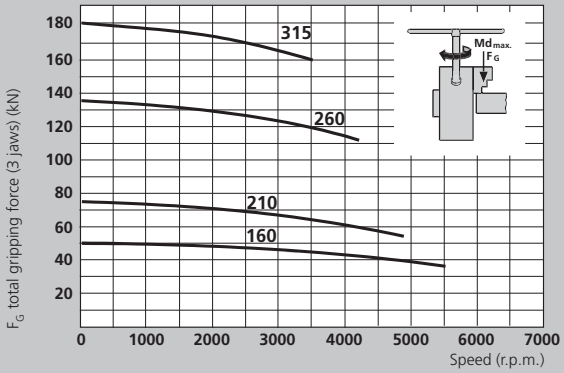

- The max. gripping force is the total, acting on the 3 jaws, obtained by applying to the chuck the max. allowed driving torque. The data refers to a chuck newly maintained accordingly to their service manual, using SMW K05 grease.

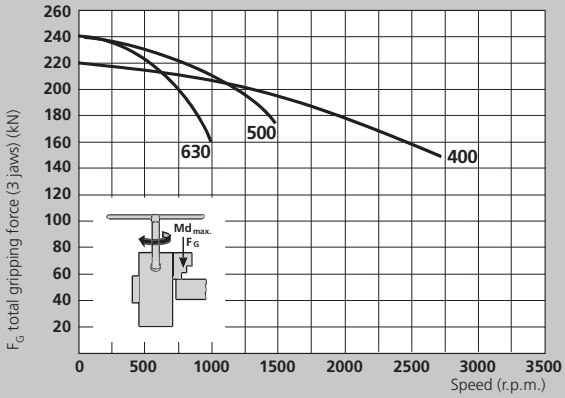

- The dynamic gripping forces have been measured using hardened standard stepped monoblock jaws type GST placed in a position not exceeding the outer diameter of the chuck.

⚠ **Safety advice / danger of damage:**
When using taller / havier jaws and / or clamping on a more external position reduce driving torque / rotating speed accordingly.

manual chuck HI-GRIP®

Direct mounting

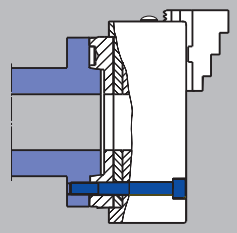

Recess and bolt circle to
DIN 55026 / ISO-A 702/1

- No reboring of already machined jaws necessary, because of runout < 0.02 (e.g. HG-N 210)

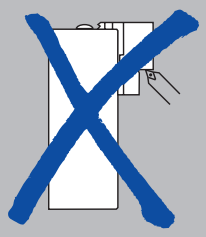

Wedge bar design guarantees highest precision, concentricity and repeatability as well as highest gripping forces

Safety jaw release with interlock

Jaw system SMW

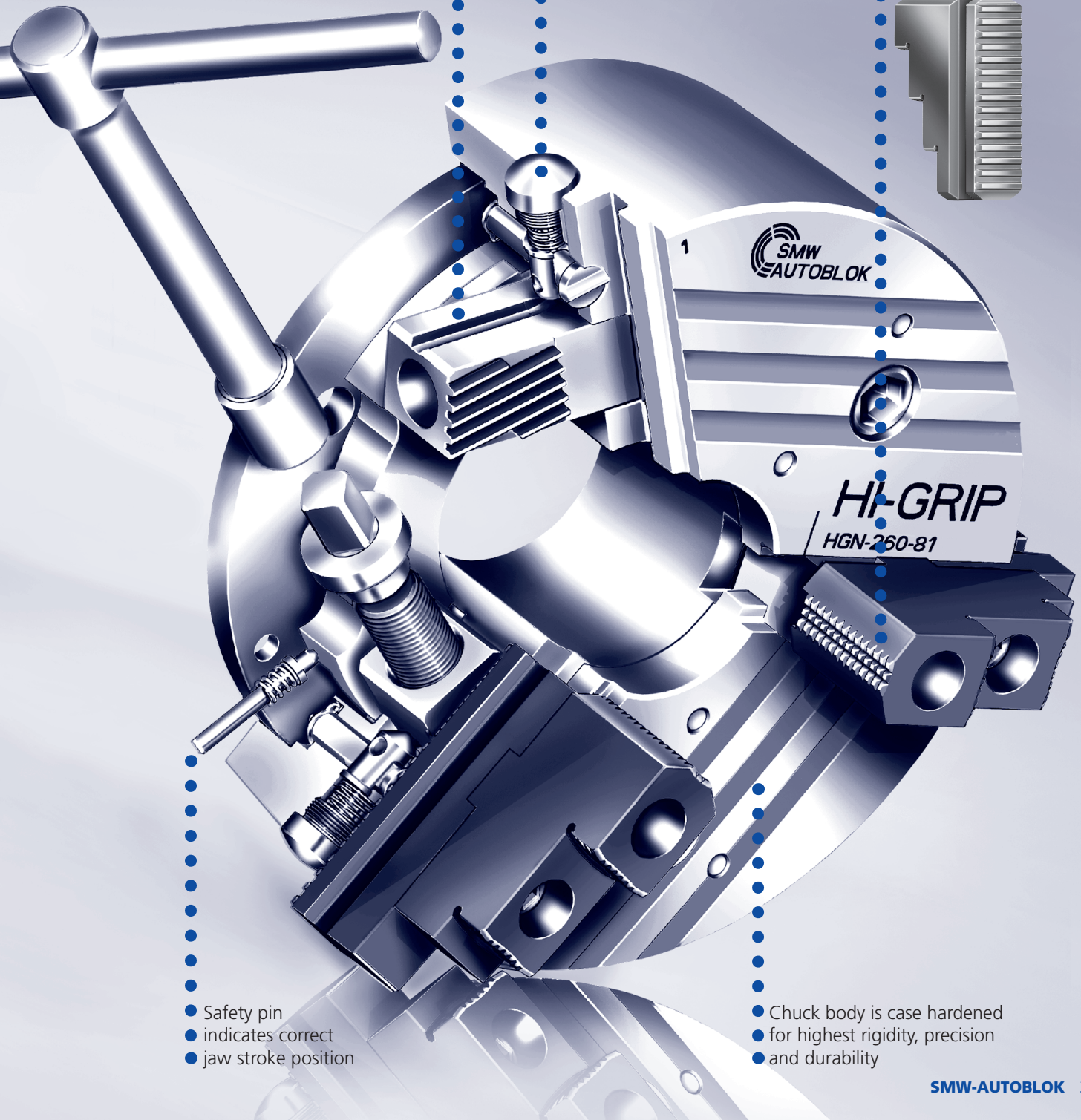

Safety pin indicates correct jaw stroke position

Chuck body is case hardened for highest rigidity, precision and durability

HG-N

QUICK JAW CHANGE
Jaw system original SMW

Manual chucks Ø 160 - 630 mm

Main dimensions and technical data

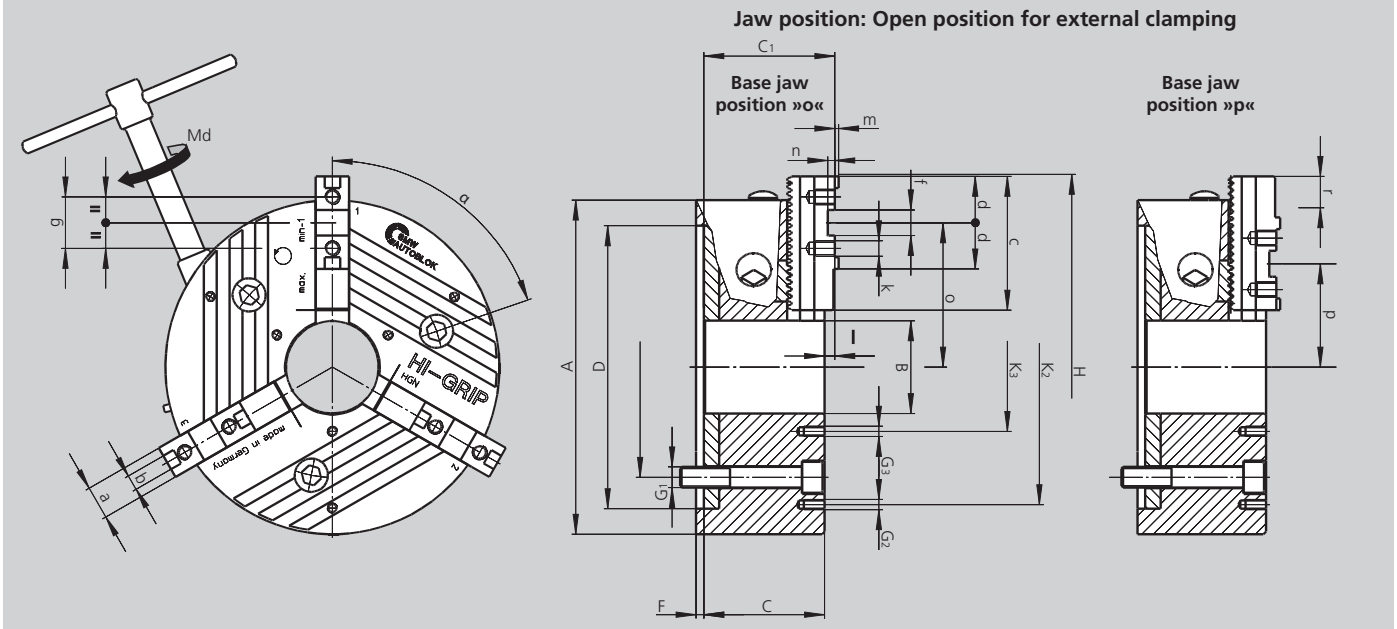

Subject to technical changes.
For more detailed information please ask our customer service.

SMW-AUTOBLOK Type		HG-N 160-46	HG-N 210-60	HG-N 260-81	HG-N 315-102	HG-N 400-128	HG-N 500-165	HG-N 630-254
Mounting	**Size**	**Z140**	**Z170**	**Z220**	**Z300**	**Z380**	**Z380**	**Z380**
	A	165	210	260	315	400	500	630
	B	46	60	81	102	128	165	254
	C	64	85.5	93.7	110.8	125	136	143
	C1	71	90.4	102	120.1	134.3	146	153
H6	**D**	140	170	220	300	380	380	380
	E	104.8	133.4	171.4	235	330.2	330.2	330.2
	F	5	6	6	6	6	8	8
	G1	M10	M12	M16	M20	M24	M24	M24
	G2	-	M10 / 3 x 120°	M10 / 3 x 120°	M10 / 3 x 120°	M12 / 3 x 120°	M16 / 9 x 40°	M16 / 6 x 60°
	G3	M5 / 3 x 120°	M6 / 3 x 120°	M8 / 3 x 120°	M10 / 3 x 120°	M12 / 3 x 120°	M12 / 3 x 120°	M12 / 3 x 120°
Swing dia.	**H**	194	244	300	358	426	530	685
	K2	-	168	210	268	330	420	550
	K3	75	75	95	120	152	195	290
	α°	76	74	71	71	71	71	74
	β°	-	60	60	60	60	20	30
Master jaw		GBK 160	GBK 200	GBK 250	GBK 315	GBK 400	GBK 500	GBK 630
	a	20	22	26	32	32	45	45
f7	**b**	8	10	12	12	12	18	18
	c	65	85	104	115	125	160	200
	d	28	33	36	36	43	50	50
H7	**f**	18	20	20	20 (26)	26	30	30
	g	32	40	40	40 (54)	54	60	60
Thread / thread depth	**k**	M8 / 12	M8 / 13	M12 / 15	M12 / 17	M12 / 17	M16 / 34	M16 / 34
	l	6	4.9	8.3	9.3	9.3	10	10
	m	2.5	2.5	3	3	3	4	4
	n	5	4.5	5.5	6	7	9	9
Max. / min.	**o**	68.5 / 49.5	88 / 64.5	112.4 / 79.4	141.3 / 102.8	168.8 / 113.8	211 / 141	291.5 / 200.5
Max. / min.	**p**	59.3 / 40.5	69 / 45.5	80.6 / 47.6	98.3 / 59.8	129.8 / 74.8	150 / 80	191.5 / 100.5
Base jaw tooth pitch	**-**	4.7	4.7	5.5	5.5	5.5	7	7
Master jaw offset	**r**	18.8	23.5	33	38.5	55	70	91
Master jaw offset	teeth	4	5	6	7	10	10	13
Usable jaw stroke	mm	5.9	6.4	7.4	9.6	11.4	11.5	13
Max. total gripping force	kN	60	75	130	180	220	250	250
At max. torque Md	Nm	80	120	160	200	250	260	260
Speed	r.p.m.	5500	4800	4200	3500	2700	1500	1000
Weight without jaws	kg	8.3	19	32	53	103	161	270
Moment of inertia	kg·m²	0.03	0.09	0.25	0.60	1.9	4.5	12

HG-N

QUICK JAW CHANGE
Jaw system original SMW

Chuck with center mounting DIN 6350

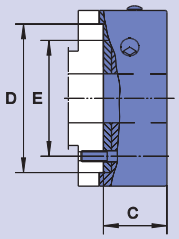

Chuck	HG-N 160-46	HG-N 210-60	HG-N 260-81	HG-N 315-102	HG-N 400-128	HG-N 500-165	HG-N 630-254
Mounting	Z140	Z170	Z220	Z300	Z380	Z380	Z380
C	81	85.5	94	111	125	136	136
D	140	170	220	300	380	380	380
E	104.8	133.4	171.4	235	330.2	330.2	330.2
Chuck with GBK + WAK							
Id. No.	089310	089538	089550	089562	089574	089584	089708
Chuck with GST							
Id. No.	089312	089313	089317	089321	089325	089328	089709
Chuck with GBK + GUA							
Id. No.	089331	089539	089551	089563	089575	089585	089710

Chuck with ISO-A mounting DIN 55026

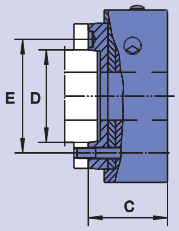

Chuck	HG-N 160-46		HG-N 210-60			HG-N 260-81		HG-N 315-102		HG-N 400-128		HG-N 500-165		HG-N 630-254	
Mounting	A4	A5	A5	A6	A8	A6	A8	A8	A11	A11	A15	A11	A15	A11	A15
C	101	101	109.5	107.5	125.5	118	119	141	141	165	161	176	172	176	172
D	63.52	82.57	82.57	106.39	139.73	106.39	139.73	139.73	196.88	196.88	285.77	196.88	285.77	196.88	285.77
E	82.6	104.8	104.8	133.4	171.4	133.4	171.4	171.4	235.0	235.0	330.2	235.0	330.2	235.0	330.2
Chuck with GBK + WAK															
Id. No.	089332	089342	090458	089540	089542	089552	089554	089564	089566	089576	089578	089586	089588	089711	089713
Chuck with GST															
Id. No.	089962	089346	090459	089314	089315	089318	089319	089322	089323	089326	089327	089329	089330	089715	089732
Chuck with GBK + GUA															
Id. No.	089427	089434	090460	089541	089543	089553	089555	089565	089567	089577	089579	089587	089589	089749	089760

Chuck with bayonet mounting DIN 55027 Type C

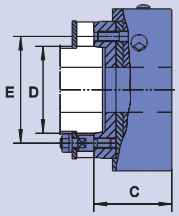

Chuck	HG-N 160-46		HG-N 210-60			HG-N 260-81		HG-N 315-102		HG-N 400-128		HG-N 500-165		HG-N 630-254	
Mounting	C4	C5	C5	C6	C8	C6	C8	C8	C11	C11	C15	C11	C15	C11	C15
C	101	101	107.5	107.5	125.5	119	119	141	141	161	161	172	172	172	172
D	63.52	82.57	82.57	106.39	139.73	106.39	139.73	139.73	196.88	196.88	285.77	196.88	285.77	196.88	285.77
E	85	104.8	104.8	133.4	171.4	133.4	171.4	171.4	235.0	235.0	330.2	235.0	330.2	235.0	330.2
Chuck with GBK + WAK															
Id. No.	089464	089487	090461	089544	089546	089556	089558	089568	089570	089580	089582	089590	089592	089761	089762
Chuck with GST															
Id. No.	089488	089489	090462	089478	089479	089480	089476	089481	089482	089483	089484	089485	089486	089765	089766
Chuck with GBK + GUA															
Id. No.	089518	089519	090463	089545	089547	089557	089559	089569	089571	089581	089583	089591	089593	089786	089802

Chuck with Camlock mounting DIN 55029 Type S

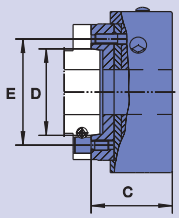

Chuck	HG-N 160-46		HG-N 210-60			HG-N 260-81		HG-N 315-102		HG-N 400-128		HG-N 500-165		HG-N 630-254	
Mounting	S4	S5	S5	S6	S8	S6	S8	S8	S11	S11	S15	S11	S15	S11	S15
C	109	109	118.5	118.5	125.5	132	132	154	154	175	175	186	186	186	186
D	63.52	82.57	82.57	106.39	139.73	106.39	139.73	139.73	196.88	196.88	285.77	196.88	285.77	196.88	285.77
E	82.6	104.8	104.8	133.4	171.4	133.4	171.4	171.4	235.0	235.0	330.2	235.0	330.2	235.0	330.2
Chuck with GBK + WAK															
Id. No.	089520	089528	090464	089901	089905	089909	089913	089917	089921	089925	089929	089933	089937	089803	089832
Chuck with GST															
Id. No.	089602	089663	089996	089899	089903	089907	089911	089915	089919	089923	089927	089931	089935	089843	089897
Chuck with GBK + GUA															
Id. No.	089668	089674	090466	089902	089906	089910	089914	089918	089922	089926	089930	089934	089938	089942	089955

Parts included: Fixing elements (screws resp. studs resp. camlock bolts).

HG-N

QUICK JAW CHANGE

Jaws

GBK
Hardened base jaws

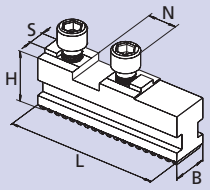

Chuck	HG-N 160	HG-N 210	HG-N 260	HG-N 315	HG-N 400	HG-N 500	HG-N 630
Jaw type	GBK 160	GBK 200	GBK 250	GBK 315	GBK 400	GBK 500	GBK 630
Id. No.	012439	012440	012441	012442	012443	012444	012445
B	20	22	26	32	32	45	45
H	27.5	29.5	37	43	43	57	57
L	65	85	104	115	125	160	200
N	18	20	20	20	26	30	30
S	8	10	12	12	12	18	18
kg / set	0.7	1.0	1.8	2.7	3.0	7.1	9.0

WAK
Soft top jaws

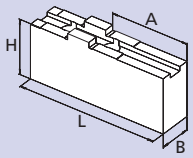

Chuck	HG-N 160	HG-N 210	HG-N 260	HG-N 315	HG-N 400	HG-N 500	HG-N 630
Jaw type	WAK 160-10	WAK 200-10	WAK 250-10	WAK 250-10	WAK 400-10	WAK 500-10	WAK 500-10
Id. No.	012491	012492	012493	012493	012494	012495	012495
B	20	22	30	30	35	50	50
H	35.5	42	50	50	54	73	73
L	85	105	125	125	145	180	180
A	42	50	70	70	74	100	100
kg / set	1.2	2.0	3.6	3.6	5.8	13.7	13.7

WAKS
Wide soft top jaws

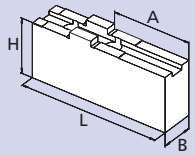

Chuck	HG-N 160	HG-N 210	HG-N 260	HG-N 315	HG-N 400	HG-N 500	HG-N 630
Jaw type	WAKS 140-10	WAKS 200-30	WAKS 250-20	WAKS 250-30	WAKS 400-30	WAKS 500-30	WAKS 500-30
Id. No.	012496	012497	012498	012499	012500	012501	012501
B	35	40	60	80	80	90	90
H	35.5	36	55	55	64	73	73
L	63	70	90	90	100	130	130
A	25	27	44	44	44	65	65
kg / set	1.5	1.9	6.2	8.5	11.0	16.4	16.4

UVB
Soft monoblock jaws

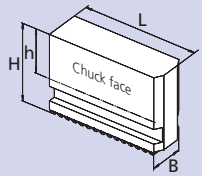

Chuck	HG-N 160	HG-N 210	HG-N 260	HG-N 315	HG-N 400	HG-N 500	HG-N 630
Jaw type	UVB 160	UVB 200	UVB 250	UVB 315	UVB 400	UVB 500	UVB 630
Id. No.	012447	012448	012449	012450	012451	012452	012453
B	20	22	26	32	32	45	45
H	60	70	90	100	100	134	134
h	39.4	45	61	66	66	87	87
L	69	83	108	119	146.5	175	230
kg / set	1.8	2.8	5.5	8.2	10	23	30

GST
Hardened stepped monoblock jaws

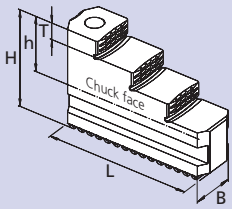

Chuck	HG-N 160	HG-N 210	HG-N 260	HG-N 315	HG-N 400	HG-N 500	HG-N 630
Jaw type	GST 170	GST 210	GST 260	GST 315	GST 400	GST 500	GST 500
Id. No.	035867	035863	037623	012457	012458	012459	012459
B	20	22	26	32	32	45	45
H	43.5	51	60	66	70	93	93
h	23	26	31	32	36	46	46
L	65	84	100	117	137	175	175
T	7	8	10	10	11	20	20
kg / set	0.7	1.3	1.9	3.4	4.4	11.7	11.7
A1	6-59	10-96	10-98	20-115	53-173	65-195	153-313
A2	42-89	56-130	62-150	85-180	116-238	160-285	241-401
A3	73-120	96-170	111-200	140-235	184-308	310-435	391-551
A4	104-151	136-210	161-250	195-290	252-378	-	-
J1	44-78	70-147	63-149	80-170	118-243	-	-
J2	74-110	109-187	112-199	135-225	186-310	170-295	254-414
J3	105-141	149-228	161-249	190-282	253-378	320-445	404-564
J4	135-182	186-260	212-300	255-350	328-448	-	-
S	198	244	303	350	456	540	660

Clamping ranges

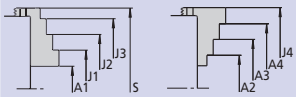

JAWS-CATALOG

Request or download: www.smw-autoblok.de

HG-N

QUICK JAW CHANGE

GUA
Hardened reversible stepped top jaws

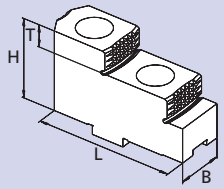

Clamping ranges

Base jaw position "o"

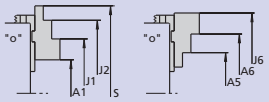

Base jaw position "p"

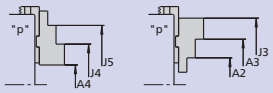

Chuck	HG-N 160	HG-N 210	HG-N 260	HG-N 315	HG-N 400	HG-N 500	HG-N 630
Jaw type	GUA 160	GUA 200	GUA 250	GUA 250	GUA 400	GUA 500	GUA 500
Id. No.	012484	012485	012486	012486	012487	012488	012488
B	20	22	30	30	36	45	45
H	36.5	38	50	50	56	70	70
L	63	72	90	90	105	130	130
T	7.5	10	14	14	15	20	20
kg / set	0.6	0.8	1.9	1.9	3.2	10.8	10.8
A1	32-69	55-111	73-161	120-205	138-258	150-308	265-469
A2	60-98	69-125	45-101	48-120	78-188	37-181	58-262
A3	85-123	96-152	125-181	130-200	186-298	144-302	179-383
A4	13-51	17-73	20-97	36-188	60-183	33-191	65-269
A5	78-116	104-163	76-165	120-205	143-268	143-301	258-462
A6	103-141	131-190	156-245	205-285	253-378	264-422	379-583
J1	91-129	117-174	152-240	202-285	218-338	259-417	374-578
J2	116-154	144-201	233-321	280-365	328-448	380-538	495-699
J3	144-181	158-215	204-259	208-280	263-380	253-411	288-492
J4	74-111	80-136	101-177	110-200	138-263	139-297	174-378
J5	99-136	107-163	180-257	198-280	248-373	260-418	295-499
J6	162-200	193-253	235-323	276-365	333-458	373-531	488-692
S	198	196-253/255	333	390	-	570	732

JAWS-CATALOG

Request or download: www.smw-autoblok.de

Important for maintenance and safe operation, to be ordered with the chuck

Grease K05®

Special grease for manual and power chucks

Cartridge 14 Oz. (DIN 1284)
Grease content 500 g
Id. No. 016440

Can 1000 g
Id. No. 011881

- High adhesion
- High resistance against coolant
- High load bearing capacity
- Low friction coefficient
- High gripping force
- Avoids tribocorrosion

Grease gun

Grease gun (DIN 1283) for cartridges 14 Oz. (DIN 1284)
■ Also refillable from grease can 1000 g

Lubrication set Id. No. 083726
Supply range
- Grease gun
- 1 Adapter flexible for high pressure grease nipple
- 1 Adapter for cone grease nipple

Fast changeover, fast payback:

The original quick jaw change manual chuck

HG-NB

EXTRA LARGE THROUGH-HOLE

▶ **ALL EXISTING TOP JAWS CAN BE USED.**

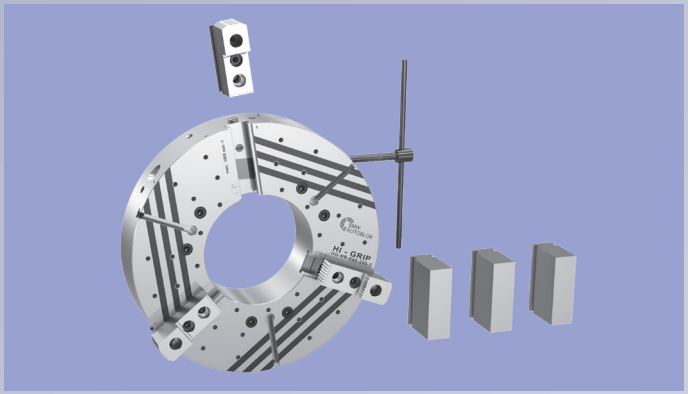

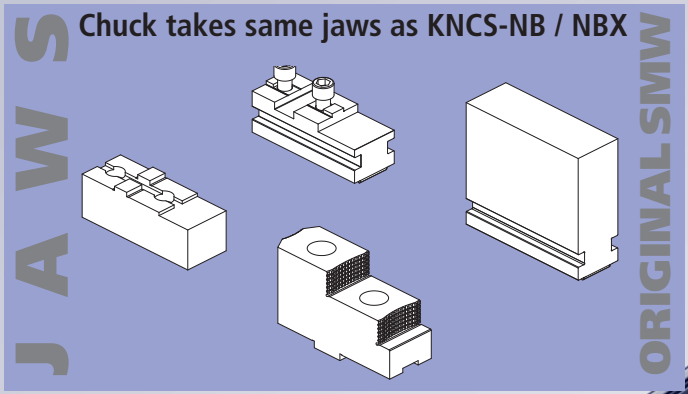

- Jaw change in less than 1 minute

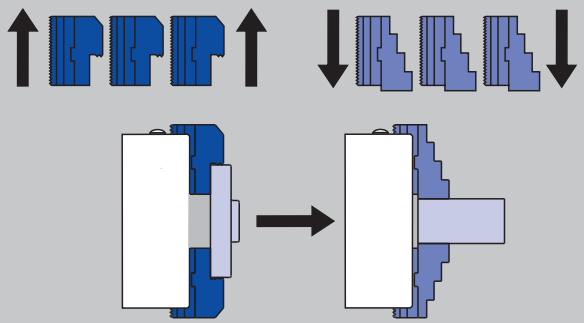

- Universal, because jaws can be radially adjusted and reversed = less jaw sets

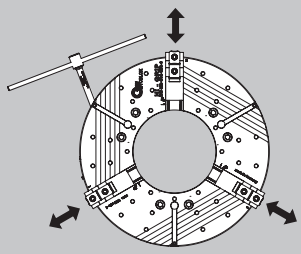

Jaws radially adjustable

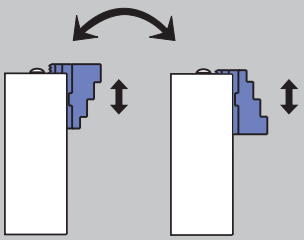

Jaws 180° reversed

For highest speeds
Flat gripping force curve

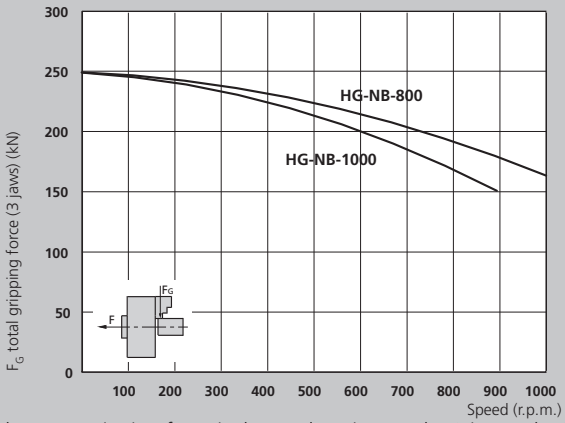

- The max. gripping force is the total, acting on the 3 jaws, obtained by applying to the chuck the max. allowed driving torque. The data refers to a chuck newly maintained accordingly to their service manual, using SMW K05 grease.
- The dynamic gripping forces have been measured using hardened standard stepped monoblock jaws placed in a position not exceeding the outer diameter of the chuck.

⚠ **Safety advice / danger of damage:**
When using taller / havier jaws and / or clamping on a more external position reduce driving torque / rotating speed accordingly.

Less costs by using all existing top jaws from:

- SMW-AUTOBLOK
- Autoblok
- Buck
- Forkardt
- Gamet
- Howa
- Kitagawa
- Logansport
- Mario Pinto
- Matsumoto
- Pratt Burnerd
- Röhm
- Rotomors
- Schunk
- Berg
- Woodworth

If your jaw type is not included, please contact us.

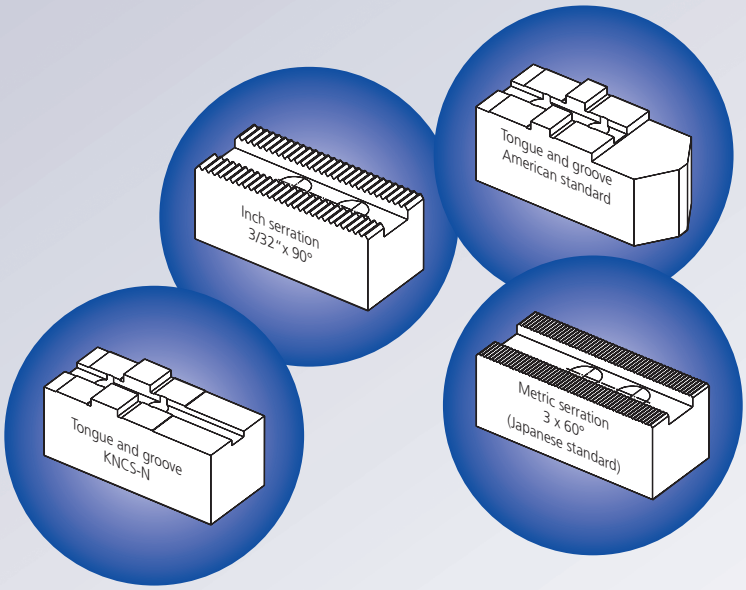

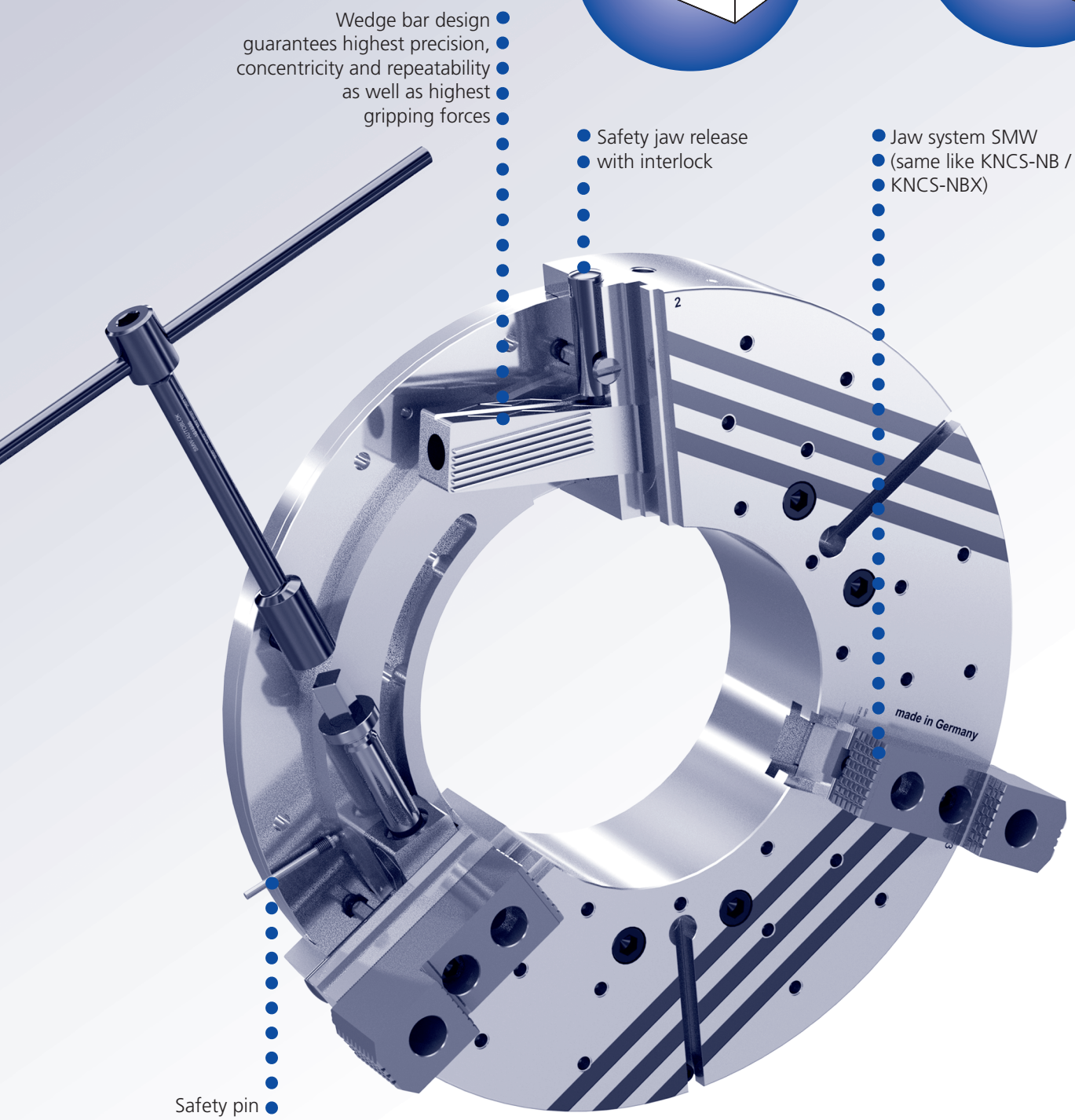

Wedge bar design guarantees highest precision, concentricity and repeatability as well as highest gripping forces

Safety jaw release with interlock

Jaw system SMW (same like KNCS-NB / KNCS-NBX)

Safety pin indicates correct jaw stroke position

HG-NB

Manual chuck Ø 800 - 1000 mm

QUICK JAW CHANGE
Jaw system original SMW

Main dimensions and technical data

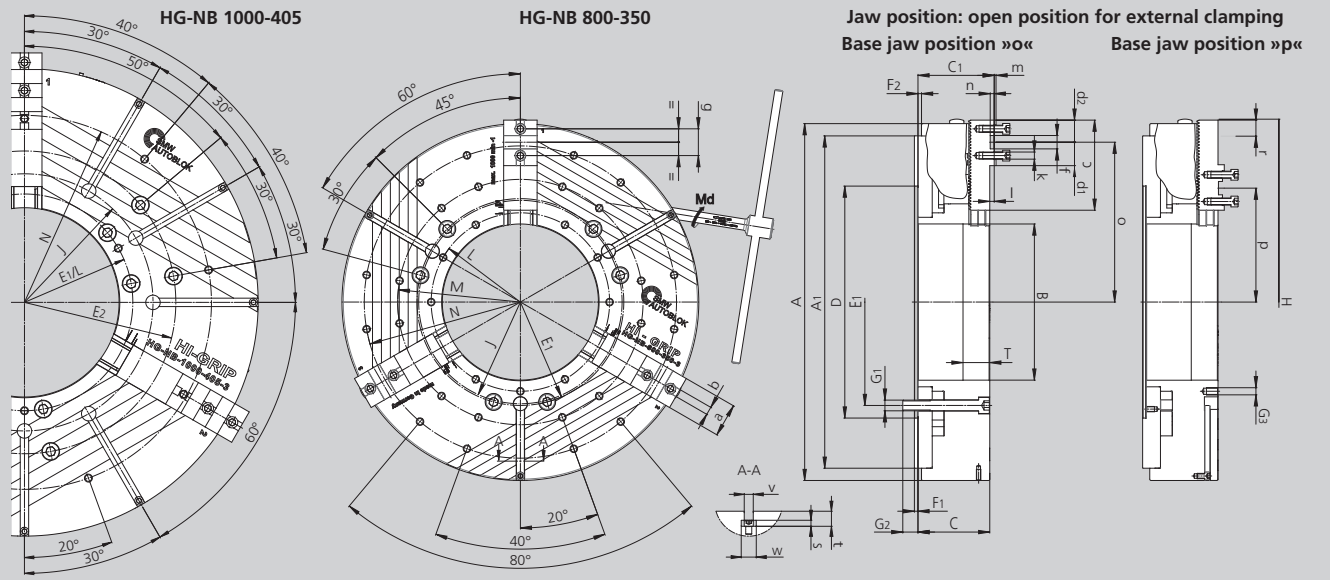

Subject to technical changes.
For more detailed information please ask our customer service.

SMW-AUTOBLOK Type		HG-NB 800-350	HG-NB 1000-405
Mounting	**Size**	**Z520**	**Z720**
	A	800	1000
	A1	745	880
	B	350	405
	C	161	161
	C1	171	171
	D	520	720
	E1	463.6	463.6
	E2	-	647.6
	F1	8	8
	F2	8	8
	G1	M24 (6x)	M24 (12x)
	G2	34	34
Threads front face	**G3**	M16 (33x) / 26	M16 (9x) / 25
Swing dia.	**H**	839	1070
	J	456	550
	L	400	463.6
	M	550	-
	N	700	800
	T	60	60
Base jaw	**-**	GBK-B 630	GBK-B 800
	a	75	75
	b	18	18
	c	202	286
	d1	52,5	113
	d2	49.5	50.5
	f	30	30
	g	60	60
	k	M16	M16
	l	10	10
	m	4	4
	n	9	9
Max. / min.	**o**	368.4 / 277.4	478 / 303
Max. / min.	**p**	265.4 / 174.4	293 / 118
Base jaw tooth pitch	**-**	7	7
Base jaw offset	**r**	91	175
Base jaw offset	teeth	13	25
	s	12	12
	t	30	30
H8	**v**	18	18
	w	30	30

Usable jaw stroke	mm	13	13.2
Max. total gripping force	kN	250	250
At max. torque Md	Nm	260	260
Speed	r.p.m.	1000	900
Weight without jaws	kg	475	745
Moment of inertia	kg·m²	45.5	109

HG-NB

Ordering review

QUICK JAW CHANGE
Wide master jaws

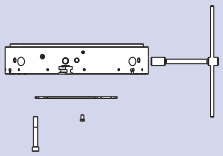

Spindle mounting \ Size	HG-NB 800-350	HG-NB 1000-405
Centering rim	Z520 161880	Z720 161910

Supply range
Chuck + actuation wrench + mounting bolts + 1 set of coverplates without base jaws

Base jaw type — GBK-B

TONGUE & GROOVE KNCS-N standard

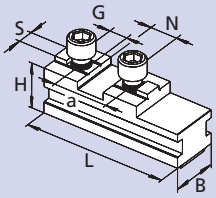

Chuck	HG-NB 800-350	HG-NB 1000-405
Id. No.	035902	064604
B	75	75
H	57	57
L	202	286
N	30	30 (2x)
S	18	18
G (metric)	M16	M16
a	60	2 x 60

Existing top jaw

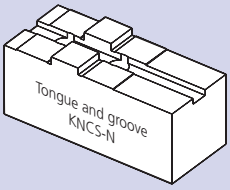

Base jaw type — GBK-BD

INCH SERRATED (for SMW-AUTOBLOK standard jaws)

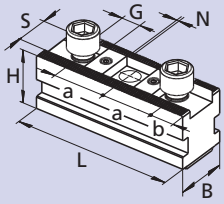

Chuck	HG-NB 800-350	HG-NB 1000-405
Id. No.	036295	036296
B	75	75
H	61	61
L	202	286
N	3/32" x 90°	3/32" x 90°
S (ridge)	25.5	25.5
G	M20	M20
a	38 / 38 / 52 / 38	3x38 / 60.7 / 2x38
b	18	17.5

Existing top jaw

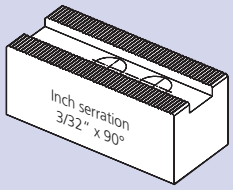

Base jaw type — GBK-BA

TONGUE & GROOVE American standard

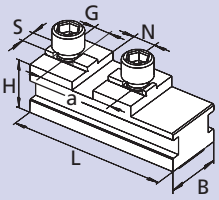

Chuck	HG-NB 800-350	HG-NB 1000-405
Id. No.	060562	064590
B	75	75
H	57	57
L	202	286
N	19.02	19.02 (2x)
S	12.7	12.7
G (inch)	3/4-10	3/4-10
a	76.2	2 x 76.2

Existing top jaw

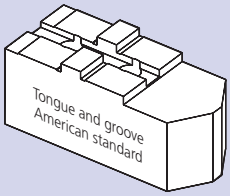

Base jaw type — GBK-BM

METRIC SERRATION

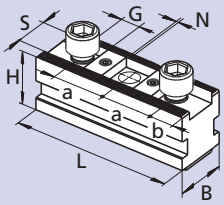

Chuck	HG-NB 800-350	HG-NB 1000-405
Id. No.	035917	036708
B	75	75
H	61	61
L	202	286
N	3 x 60°	3 x 60°
S	25	25
G (metric)	M20	M20
a	2 x 60	60 / 60 / 70.5 / 60
b	18	17.5

Existing top jaw

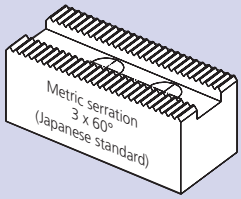

Jaw type — UVB-B

Soft wide monoblock jaws

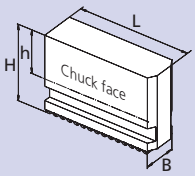

Chuck	HG-NB 800/1000
Jaw type	UVB-B 630
Id. No.	5301060
B	75
H	160
h	105
L	230
kg / set	61.5

NEW GENERATION

The sealed quick jaw change manual chuck

HG-2G

▶ ALL EXISTING TOP JAWS CAN BE USED

Customer Benefits

	HG-N	HG-2G
Minimized set up times due to the quick jaw change system	■	■
Highest accuracy of the jaw change	■	■
Universal	■	■
Case hardened parts	■	■
Wedge bar drive	■	■
Jaw safety interlock	■	■
Ideal for vertical mounting of chuck		■
Sealed wedge bars and base jaws		■
Optimized lubrication in the jaw guides		■
Low maintenance		■

Economic and Efficiency

Example: Maintenance costs at high accumulation of dirt / coolant

		HG-N	HG-2G
Lubrication interval		every shift	every 3rd shift
Required time for lubricating		10 Min.	10 Min.
Working days / year		230	230
Required time / year		2.300 Min.	767 Min.
Machine costs / hour		€ 60.–	€ 60.–
Total costs / year		€ 2.300.–	€ 767.–
Profit / year *	**at 1-shift operation**		**€ 1.533.–**
	at 2-shift operation		**€ 3.066.–**
	at 3-shift operation		**€ 4.599.–**

* Additionally the profit is increased by reducing the down time of the machine, as the 2G-chucks also need less disassembling for cleaning.

Clamping glossary

HG-2G: Evolution of the quick jaw change power chuck HG-N. The HG-2G features additional seals and an improved lubrication system for low maintenance. **The chuck still offers all the same advantages as the HG-N.**

The proven wedge bar drive guaranties unmatched accuracy and rigidity. A low loss of grip force due to centrifugal force makes the chuck ideal for high speed applications.

Sealing: The HG-2G is sealed by seals attached to both faces of the base jaws. Also the wedge bars are protected by mechanical seals. The seals **protect the chuck** against penetration of dirt and swarf.

Low Maintenance: The **lubrication system of the HG-2G is optimized**. Additional lubrication channels and grease pockets integrated in the jaw guide ways ensure constant clamping force. The lubrication intervals are significantly longer reducing down times and cost for maintenance.

Mass production: The sealing and the new lubrication system make the HG-2G also suitable for use on machining centers or turning and milling centers in vertical operation.

Compatibility: The HG-2G is interchangeable with the standard series of quick jaw change chucks HG-N. Existing master jaws still can be used without sealing. A small modification made to the master jaws and a **mounting kit** can upgrade existing master jaws to become 2G master jaws.

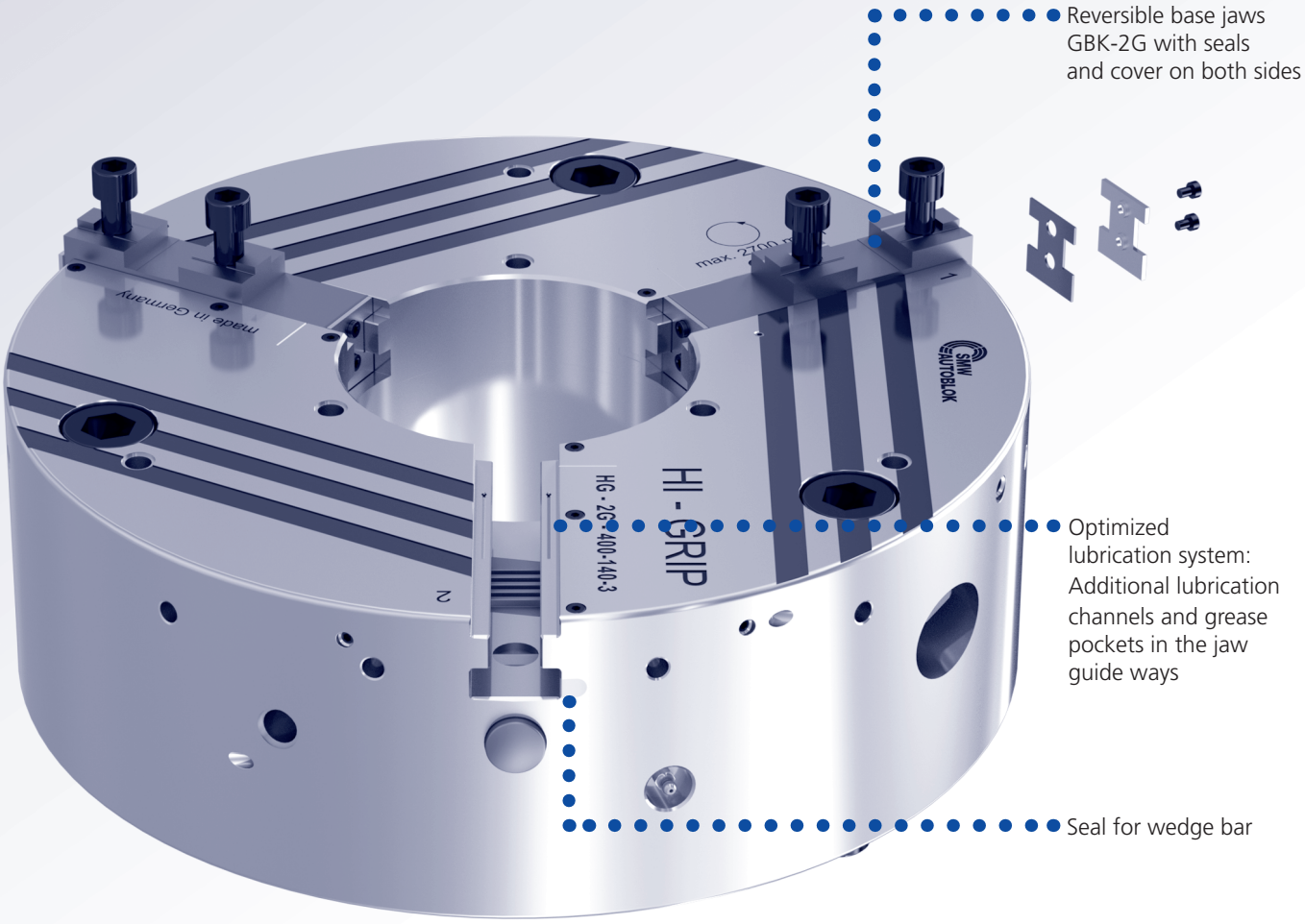

HG-2G

QUICK JAW CHANGE
Jaw system original SMW

Manual chucks Ø 400 - 630 mm

Main dimensions and technical data

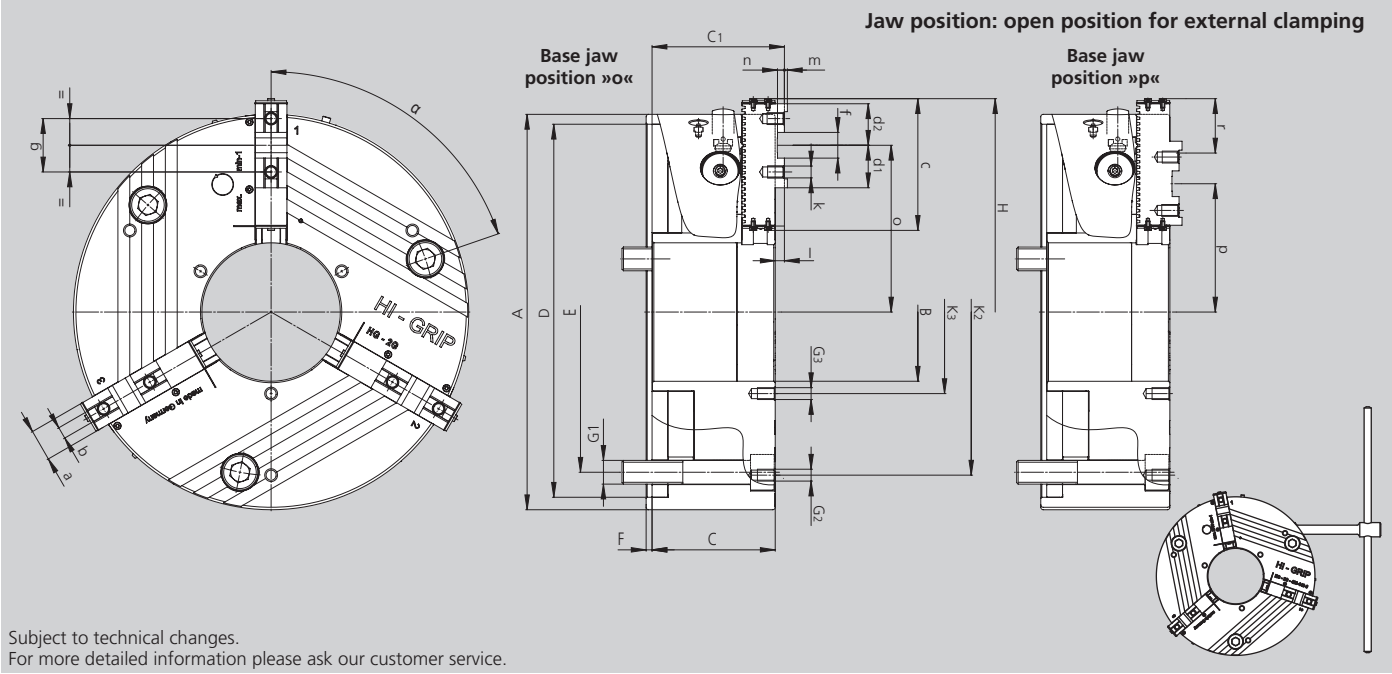

Subject to technical changes.
For more detailed information please ask our customer service.

SMW-AUTOBLOK Type		HG-2G 400-140	HG-2G 500-165	HG-2G 630-254
Mounting	**Size**	**Z380**	**Z380**	**Z380**
	A	400	500	630
	B	140	165	254
	C	124.6	136	143
	C1	133.9	146	153
H6	**D**	380	380	380
	E	330.2	330.2	330.2
	F	6	8	8
	G1	M24	M24	M24
	G2	M12 / 3 x 120°	M16 / 9 x 40°	M16 / 6 x 60°
	G3	M12 / 3 x 120°	M12 / 3 x 120°	M12 / 3 x 120°
Swing dia.	**H**	432	on request	on request
	K2	330	420	550
	K3	165	195	290
	α°	71	71	74
Master jaw		GBK-2G 400	GBK-2G 500	GBK-2G 630
	a	32	45	45
f7	**b**	12	18	18
	c	133.2	167.7	209.7
	d1	43	53	53
	d2	42	48.25	49.7
H7	**f**	26	30	30
	g	54	60	60
Thread / thread depth	**k**	M12 / 17	M16 / 34	M16 / 34
	l	9.3	10	10
	m	3	4	4
	n	7	9	9
Max. / min.	**o**	168.8 / 113.8	211 / 141	291.5 / 200.5
Max. / min.	**p**	129.8 / 74.8	150 / 80	191.5 / 100.5
Base jaw tooth pitch	**-**	5.5	7	7
Master jaw offset	**r**	55	70	91
Master jaw offset	teeth	10	10	13
Usable jaw stroke	mm	8.5	11.5	13
Max. total gripping force	kN	220	250	250
At max. torque Md	Nm	250	260	260
Speed	r.p.m.	2700	1500	1000
Weight without jaws	kg	99	161	270
Moment of inertia	kg·m²	1.9	4.5	12

Further sizes on request.

Chuck with center mounting DIN 6350

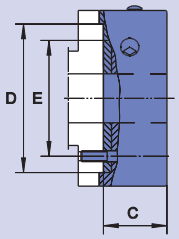

Chuck	HG-2G 400-140	HG-2G 500-165	HG-2G 630-254
Mounting	Z380	Z380	Z380
C	125	136	136
D	380	380	380
E	330.2	330.2	330.2
Chuck with GBK-2G + WAK			
Id. No.	161729	161813	161827
Chuck with GBK-2G + GUA			
Id. No.	161800	161814	161828

Chuck with ISO-A mounting DIN 55026

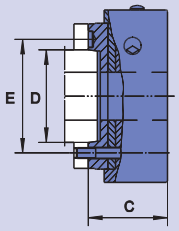

Chuck	HG-2G 400-140		HG-2G 500-165		HG-2G 630-254	
Mounting	A11	A15	A11	A15	A11	A15
C	165	161	176	172	176	172
D	196.88	285.77	196.88	285.77	196.88	285.77
E	235.0	330.2	235.0	330.2	235.0	330.2
Chuck with GBK-2G + WAK						
Id. No.	161801	161807	161815	161821	161829	161835
Chuck with GBK-2G + GUA						
Id. No.	161802	161808	161816	161822	161830	161836

Chuck with bayonet mounting DIN 55027 Type C

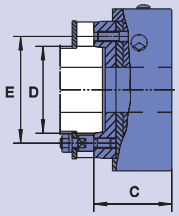

Chuck	HG-2G 400-140		HG-2G 500-165		HG-2G 630-254	
Mounting	C11	C15	C11	C15	C11	C15
C	161	161	172	172	172	172
D	196.88	285.77	196.88	285.77	196.88	285.77
E	235.0	330.2	235.0	330.2	235.0	330.2
Chuck with GBK-2G + WAK						
Id. No.	161803	161809	161817	161823	161831	161837
Chuck with GBK-2G + GUA						
Id. No.	161804	161810	161818	161824	161832	161838

Chuck with Camlock mounting DIN 55029 Type S

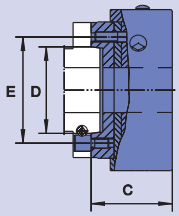

Chuck	HG-2G 400-140		HG-2G 500-165		HG-2G 630-254	
Mounting	S11	S15	S11	S15	S11	S15
C	175	175	186	186	186	186
D	196.88	285.77	196.88	285.77	196.88	285.77
E	235.0	330.2	235.0	330.2	235.0	330.2
Chuck with GBK-2G + WAK						
Id. No.	161805	161811	161819	161825	161833	161839
Chuck with GBK-2G + GUA						
Id. No.	161806	161812	161820	161826	161834	161840

Parts included: Fixing elements (screws resp. studs resp. camlock bolts).
Further sizes on request.

HG-2G

QUICK JAW CHANGE

Jaws

GBK-2G
Hardened base jaws

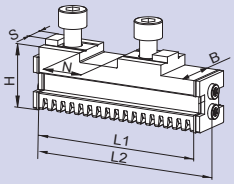

Chuck	HG-2G 400	HG-2G 500	HG-2G 630
Jaw type	GBK-2G 400	GBK-2G 500	GBK-2G 630
Id. No.	161605	161843	161846
B	32	45	45
H	43	57	57
L1	123	158	198
L2 *	133.2	168.2	208.2
N	26	30	30
S	12	18	18
kg / set	3.0	7.1	9.0

* Dimension incl. seals, cover and screws

WAK
Soft top jaws

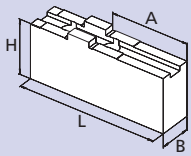

Chuck	HG-2G 400	HG-2G 500	HG-2G 630
Jaw type	WAK 400-10	WAK 500-10	WAK 500-10
Id. No.	012494	012495	012495
B	35	50	50
H	54	73	73
L	145	180	180
A	74	100	100
kg / set	5.8	13.7	13.7

WAKS
Wide soft top jaws

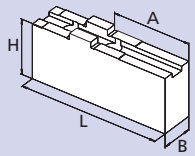

Chuck	HG-2G 400	HG-2G 500	HG-2G 630
Jaw type	WAKS 400-30	WAKS 500-30	WAKS 500-30
Id. No.	012500	012501	012501
B	80	90	90
H	64	73	73
L	100	130	130
A	44	65	65
kg / set	11.0	16.4	16.4

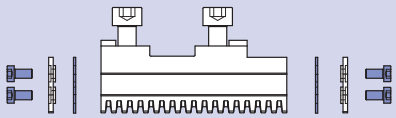

Seal Kit
for hardened base jaws GBK-2G
Consisting of seals (6 pcs.)
and mounting screws (12 pcs.)

HG-2G	400	500	630
Seal kit type	GBK-2G 400	GBK-2G 500	GBK-2G 630
Id. No.	205385	206915	206915

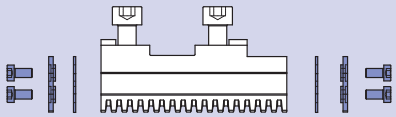

Mounting Kit
for hardened base jaws GBK-2G
Consisting of seals (6 pcs.), covers (6 pcs.)
and mounting screws (12 pcs.)

HG-2G	400	500	630
Mounting kit type	GBK-2G 400	GBK-2G 500	GBK-2G 630
Id. No.	205389	206916	206916

Advice: Existing master jaws still can be used without seals. A small modification made to the master jaws and a mounting kit can upgrade existing master jaws to become 2G master jaws (instruction for the rework on request).

HG-2G

QUICK JAW CHANGE

GUA
Hardened reversible stepped top jaws

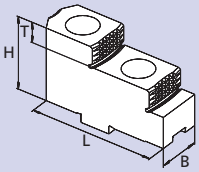

Clamping ranges

Base jaw position "o"

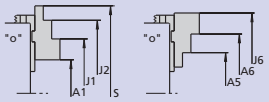

Base jaw position "p"

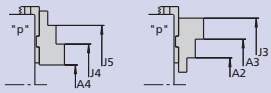

Chuck	HG-2G 400	HG-2G 500	HG-2G 630
Jaw type	GUA 400	GUA 500	GUA 500
Id. No.	012487	012488	012488
B	36	45	45
H	56	70	70
L	105	130	130
T	15	20	20
kg / set	3.2	10.8	10.8
A1	138-258	150-308	265-469
A2	78-188	37-181	58-262
A3	186-298	144-302	179-383
A4	60-183	33-191	65-269
A5	143-268	143-301	258-462
A6	253-378	264-422	379-583
J1	218-338	259-417	374-578
J2	328-448	380-538	495-699
J3	263-380	253-411	288-492
J4	138-263	139-297	174-378
J5	248-373	260-418	295-499
J6	333-458	373-531	488-692
S	-	570	732

Important for maintenance and safe operation, to be ordered with the chuck

Grease K05®

Special grease for manual and power chucks

Cartridge 14 Oz. (DIN 1284)
Grease content 500 g
Id. No. 016440

Can 1000 g
Id. No. 011881

- High adhesion
- High resistance against coolant
- High load bearing capacity
- High gripping force
- Low friction coefficient
- Avoids tribocorrosion

Grease gun

Grease gun (DIN 1283) for cartridges 14 Oz. (DIN 1284)
■ Also refillable from grease can 1000 g

Lubrication set Id. No. 083726
Supply range
- Grease gun
- 1 Adapter flexible for high pressure grease nipple
- 1 Adapter for cone grease nipple

NEW GENERATION

The sealed quick jaw change manual chuck

HG-B-2G

► ALL EXISTING TOP JAWS CAN BE USED

Customer benefits

	HG-NB	HG-B-2G
Minimized set up times due to the quick jaw change system	■	■
Highest accuracy of the jaw change	■	■
Universal	■	■
Case hardened parts	■	■
Wedge bar drive	■	■
Jaw safety interlock	■	■
Ideal for vertical mounting of chuck		■
Sealed wedge bars and base jaws		■
Optimized lubrication in the jaw guides		■
Low maintenance		■

Economic and efficiency

Example: Maintenance costs at high accumulation of dirt / coolant

		HG-NB	HG-B-2G
Lubrication interval		every shift	every 3rd shift
Required time for lubricating		10 Min.	10 Min.
Working days / year		230	230
Required time / year		2.300 Min.	767 Min.
Machine costs / hour		€ 60.–	€ 60.–
Total costs / year		€ 2.300.–	€ 767.–
Profit / year *	**at 1-shift operation**		**€ 1.533.–**
	at 2-shift operation		**€ 3.066.–**
	at 3-shift operation		**€ 4.599.–**

* Additionally the profit is increased by reducing the down time of the machine, as the 2G-chucks also need less disassembling for cleaning.

Clamping glossary

HG-B-2G: Evolution of the quick jaw change power chuck HG-NB. The HG-B-2G features additional seals and an improved lubrication system for low maintenance. **The chuck still offers all the same advantages as the HG-NB.**

The proven wedge bar drive guaranties unmatched accuracy and rigidity. A low loss of grip force due to centrifugal force makes the chuck ideal for high speed applications.

Sealing: The HG-B-2G is sealed by seals attached to both faces of the base jaws. Also the wedge bars are protected by mechanical seals. The seals **protect the chuck** against penetration of dirt and swarf.

Low Maintenance: The lubrication system of the HG-B-2G is optimized. Additional lubrication channels and grease pockets integrated in the jaw guide ways ensure constant clamping force. The lubrication intervals are significantly longer reducing down times and cost for maintenance.

Mass production: The sealing and the new lubrication system make the HG-B-2G also suitable for use on machining centers or turning and milling centers in vertical operation.

Compatibility: The HG-B-2G is interchangeable with the standard series of quick jaw change chucks HG-NB. Existing master jaws still can be used without sealing. A small modification made to the master jaws and a **mounting kit** can upgrade existing master jaws to become 2G master jaws.

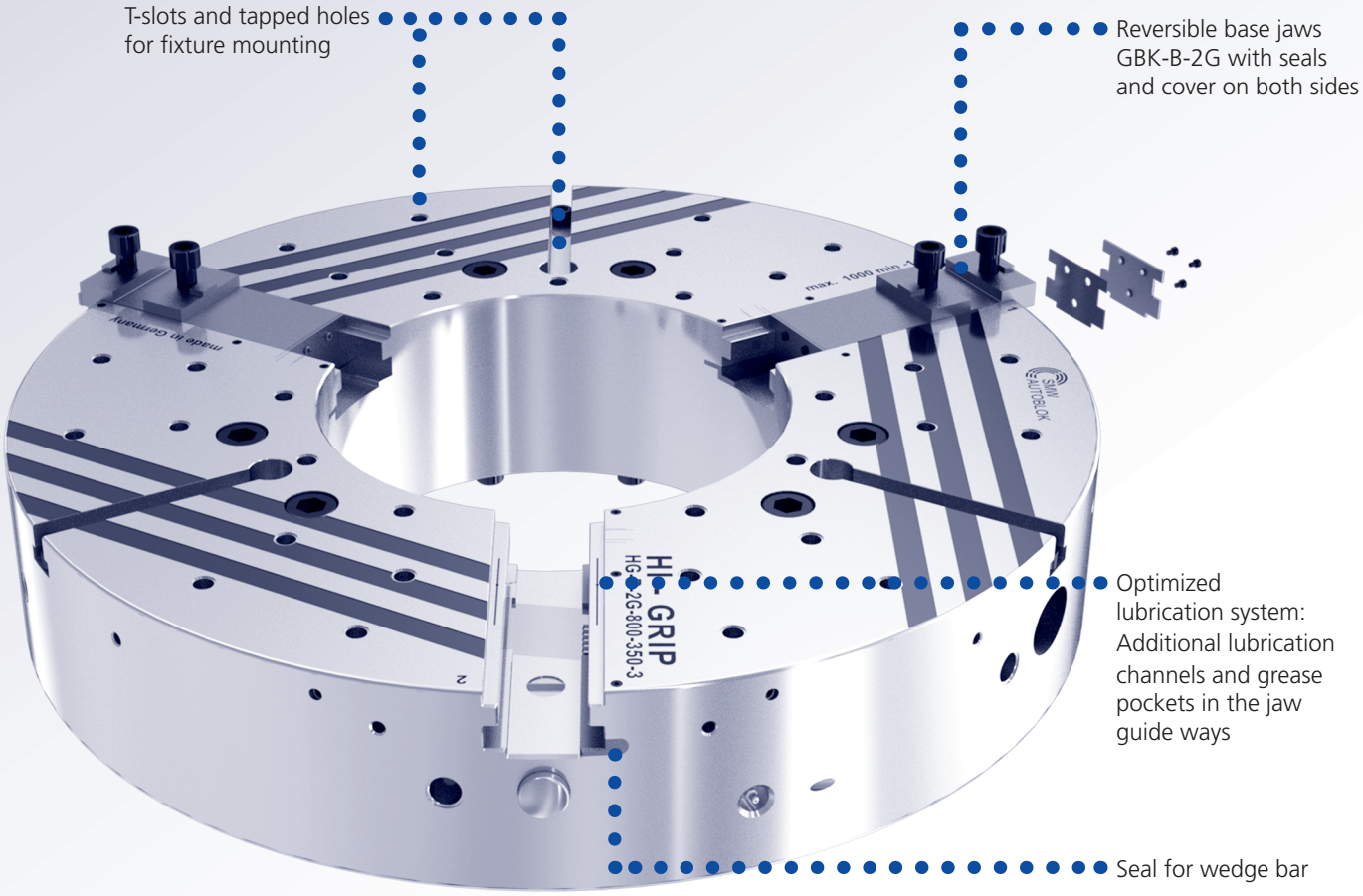

8

HG-B-2G

Manual chuck Ø 800 - 1000 mm

QUICK JAW CHANGE
Jaw system original SMW

Main dimensions and technical data

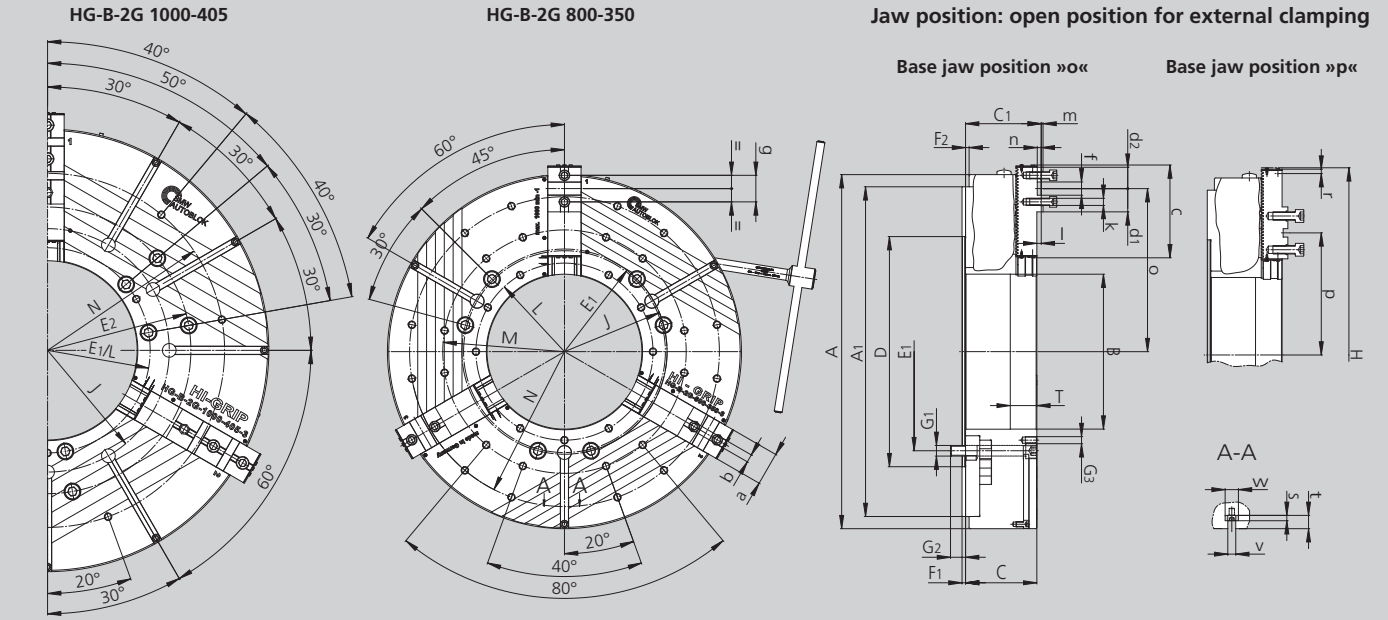

Subject to technical changes.
For more detailed information please ask our customer service.

Base jaw position with GBK-B-2G

SMW-AUTOBLOK Type		HG-B-2G 800-350	HG-B-2G 1000-405
Mounting	**Size**	**Z520**	**Z720**
	A	800	1000
	A1	745	880
	B	350	405
	C	161	161
	C1	171	171
	D	520	720
	E1	463.6	463.6
	E2	-	647.6
	F1	8	8
	F2	8	8
	G1	M24 (6x)	M24 (12x)
	G2	34	34
Threads front face	**G3**	M16 (33x) / 26	M16 (9x) / 25
Swing dia.	**H**	845	1076
	J	456	550
	L	400	463.6
	M	550	-
	N	700	800
	T	60	60
Base jaw	**-**	GBK-B-2G 630	GBK-B-2G 800
	a	75	75
	b	18	18
	c	209.7	293.4
	d1	52,5	113
	d2	48.25	49
	f	30	30
	g	60	60
	k	M16	M16
	l	10	10
	m	4	4
	n	9	9
Max. / min.	**o**	368.4 / 277.4	478 / 303
Max. / min.	**p**	265.4 / 174.4	353 / 178
Base jaw tooth pitch	**-**	7	7
Base jaw offset	**r**	91	175
Base jaw offset	teeth	13	25
	s	12	12
	t	30	30
H8	**v**	18	18
	w	30	30

Usable jaw stroke	mm	13	13.2
Max. total gripping force	kN	250	250
At max. torque Md	Nm	260	260
Speed	r.p.m.	1000	900
Weight without jaws	kg	475	745
Moment of inertia	kg·m²	45.5	109

HG-B-2G

Ordering review

QUICK JAW CHANGE
Wide master jaws

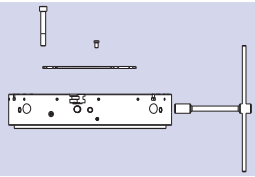

Spindle mounting \ Size	HG-B-2G 800-350	HG-B-2G 1000-405
Centering rim	Z520 162300	Z720 162340

Supply range
Chuck + actuation wrench + mounting bolts + set of coverplates without base jaws

Base jaw type

GBK-B-2G

TONGUE & GROOVE KNCS-N standard

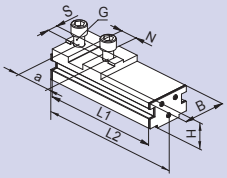

Chuck	HG-B-2G 800-350	HG-B-2G 1000-405
Id. No.	162316	162319
B	75	75
H	57	57
L1	199.5	283.2
L2 *	209.7	293.4
N	30	30 (2x)
S	18	18
G (metric)	M16	M16
a	60	2 x 60

* Dimensions incl. seals, covers and mounting screws

Existing top jaw

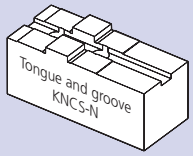

Base jaw type

GBK-BD-2G

INCH SERRATED (for SMW-AUTOBLOK standard jaws)

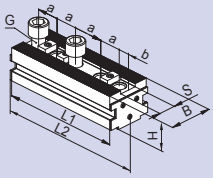

Chuck	HG-B-2G 800-350	HG-B-2G 1000-405
Id. No.	162462	162463
B	75	75
H	61	61
L1	199.5	283.5
L2 *	209.7	293.7
N	3/32" x 90°	3/32" x 90°
S (ridge)	25.5	25.5
G	M20	M20
a	38 / 38 / 52 / 38	38 / 38 / 38 / 60.7 / 38 / 38
b	16.75	16.25

* Dimensions incl. seals, covers and mounting screws

Existing top jaw

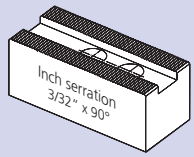

Base jaw type

GBK-BA-2G

TONGUE & GROOVE American standard

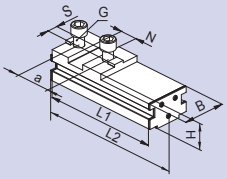

Chuck	HG-B-2G 800-350	HG-B-2G 1000-405
Id. No.	162315	162349
B	75	75
H	57	57
L1	199.5	283.2
L2 *	209.7	293.4
N	19.02	19.02 (2x)
S	12.7	12.7
G (inch)	3 / 4 - 10	3 / 4 - 10
a	76.2	2 x 76.2

* Dimensions incl. seals, covers and mounting screws

Existing top jaw

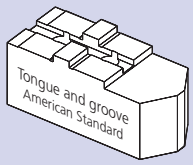

Base jaw type

GBK-BM-2G

METRIC SERRATION

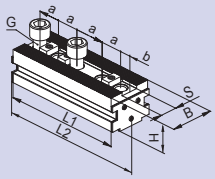

Chuck	HG-B-2G 800-350	HG-B-2G 1000-405
Id. No.	162464	162465
B	75	75
H	61	61
L1	199.5	283.5
L2 *	209.7	283.7
N	3 x 60°	3 x 60°
S	25	25
G (metric)	M20	M20
a	60 / 60	60 / 60 / 70.5 / 60
b	16.75	16.75

* Dimensions incl. seals, covers and mounting screws

Existing top jaw

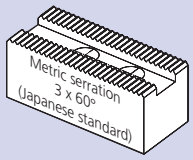

Seal Kit

for hardened base jaws GBK-B-2G / GBK-BD-2G / GBK-BA-2G / GBK-BM-2G

Consisting of seals (6 pcs.) and mounting screws (12 pcs.)

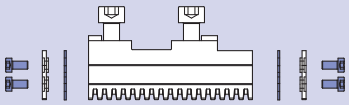

Chuck	HG-B-2G 800-350	HG-B-2G 1000-405
Seal Kit Type	GBK-B-2G 630	GBK-B-2G 800
Id. No.	207673	207673

Mounting Kit

for hardened base jaws GBK-B-2G / GBK-BD-2G / GBK-BA-2G / GBK-BM-2G

Consisting of seals (6 pcs.), covers (6 pcs.) and mounting screws (12 pcs.)

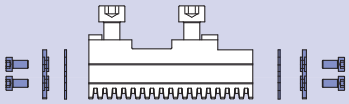

Chuck	HG-B-2G 800-350	HG-B-2G 1000-405
Mounting Kit Type	GBK-B-2G 630	GBK-B-2G 800
Id. No.	207674	207674

Advice: Existing master jaws still can be used without seals. A small modification made to the master jaws and a mounting kit can upgrade existing master jaws to become 2G master jaws (instruction for the rework on request).

PTF

TONGUE & GROOVE
Manual clamping and radial setting of jaws

High precision 4-jaw independent manual chucks Ø 1000 - 2000 mm

- **Closed center**
- **4 jaws (all diameters)**

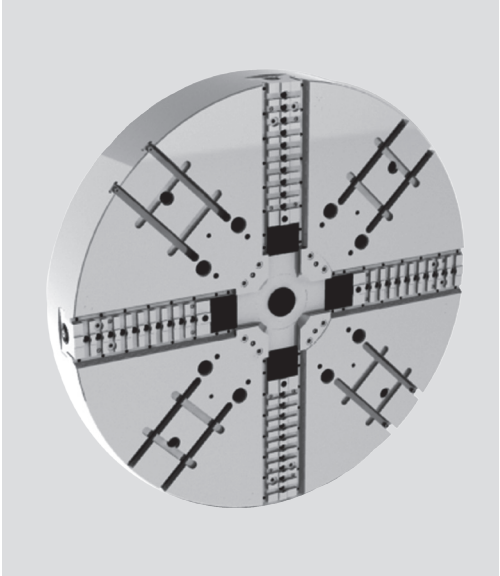

Application/customer benefits

- Clamping of large round, square and irregular parts
- Manual, radial setting of component and manual clamping
- Suitable for vertical machines. Strong body and master jaws design and option to easily mount a strong center point
- High gripping force allowed by the strong design, with the option to increase it with a torque multiplier
- Tongue & groove master jaws (type "American Standard")

Technical features

- Manual gripping force applied by a strong and protected screw on a strong and rigid master jaw
- Manual and fine setting of master jaws for workpiece centering
- Protection from contamination with seals along the master jaw profiles
- Possibility to use jaw boxes for manual clamping mounted on the T-slots between the master jaws

Standard equipment

4-jaw independent manual chuck
1 set of soft top jaws
1 regulation and actuation key
1 grease gun and 500g grease

Ordering example

4-jaw independent chuck PTF 1600 / Z720
Id. No. 77137063
Option: 5:1 torque multiplier
Id. No. 13506320

Optional: 5:1 torque multiplier

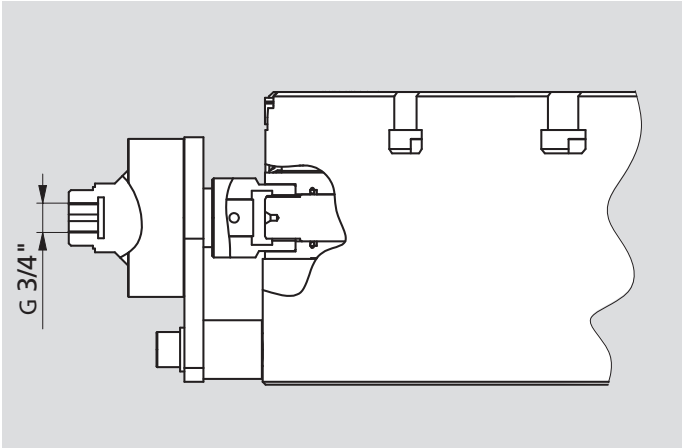

Optional 5:1 torque multiplier
To achieve the maximum gripping force and speed, the easiest and most comfortable way is to use this multiplier that will increase 5 times the input torque.
Id. No. 13506320

Soft and hard top jaws for PTF

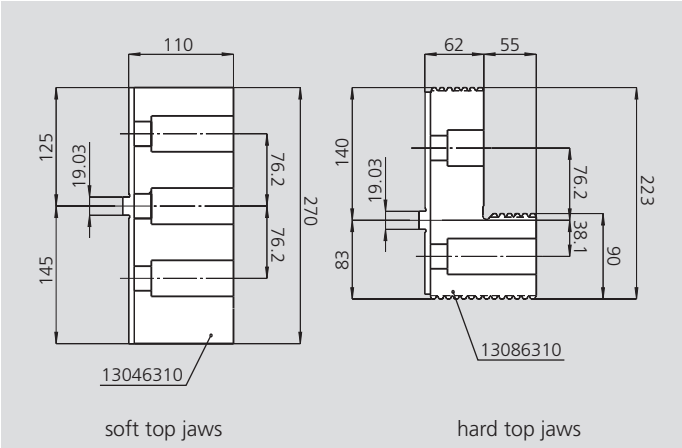

Safety advice / danger of damage:
When using taller / heavier jaws and / or clamping on a bigger diameter reduce operating torque / rotating speed accordingly.

Technical data

SMW-AUTOBLOK Type		PTF 1000	PTF 1250	PTF 1400	PTF 1600	PTF 2000
Radial jaw stroke (manual setting)	mm	60	60	60	60	80
Max. manual operating torque	Nm	600	600	700	700	700
Max. total gripping force*	kN	360	360	360	360	360
Max. speed	r.p.m.	550	450	380	340	280
Weight (without top jaws)	kg	730	930	1435	1860	2730
Moment of inertia	kg·m²	89	183	364	565	1380
Hard top jaw (piece)	Id. No.	13086310	13086310	13086310	13086310	13086310
Soft top jaw (piece)	Id. No.	13046310	13046310	13046310	13046310	13046310
Id. No.		**77137039**	**77137049**	**77137055**	**77137063**	**77137079**

* at max. torque.

High precision 4-jaw independent manual chucks Ø 1000 - 2000 mm

- Closed center
- 4 jaws (all diameters)

PTF

TONGUE & GROOVE
Manual clamping and radial setting of jaws

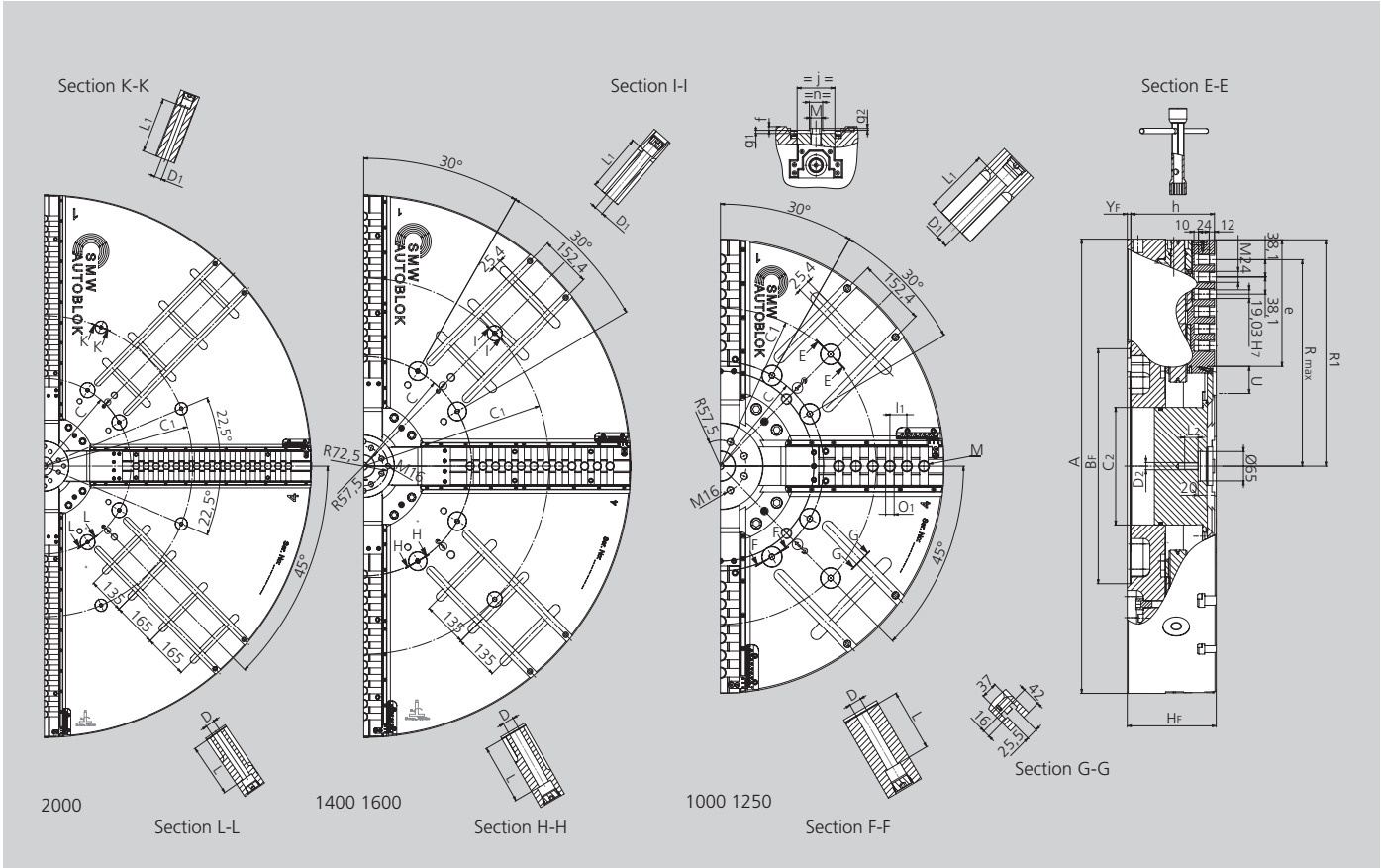

Subject to technical changes.
For more detailed information please ask our customer service.

SMW-AUTOBLOK Type				PTF 1000	PTF 1250	PTF 1400	PTF 1600	PTF 2000
Mounting				Z520	Z520	Z720	Z720	Z720
	A		mm	1005	1250	1400	1600	2000
	B_F	H6	mm	520	520	720	720	720
	C		mm	463.6	463.6	647.6	647.6	647.6
	C_1		mm	700	700	1110	1110	1110
	C_2		mm	260	260	300	300	300
	D		mm	27	27	33	33	33
	D_1		mm	27	27	27	27	27
	D_2		mm	M16	M16	M24	M24	M24
	H_F		mm	200	200	240	240	260
	L		mm	137	139	177	177	197
	L_1		mm	145	145	177	173	205
	L_2		mm	30	30	24	24	24
Chuck open	R_1		mm	501	623	696	796	996
Chuck open	R_{max}		mm	457	563	657	738	914
Radial jaw stroke	U		mm	60	60	60	60	80
	Y_F		mm	8	8	8	8	8
	e		mm	280	402	439	536	704
	f		mm	8	8	8	8	8
	g_1		mm	7	7	7	7	7
	g_2		mm	4	4	4	4	4
	h		mm	188	188	228	228	248
	j		mm	85	85	110	110	110
	l_1		mm	38.1	38.1	38.1	38.1	38.1
	m		mm	M24	M24	M24	M24	M24
	n	h8	mm	30	30	30	30	30
	o_1	H7	mm	19.03	19.03	19.03	19.03	19.03
Number of "o1" cross grooves				6	9	10	12	16
Number of "m" threads				6	9	11	12	16

JBX

Manual jaw box
SMW-AUTOBLOK standard mounting dimensions

JBX-2G

Manual jaw box
with semi-finished body

High precision, resistance and power manual jaw box

- Accessory for face plates, 4 jaws independent manual or other chucks
- Internal or external clamping

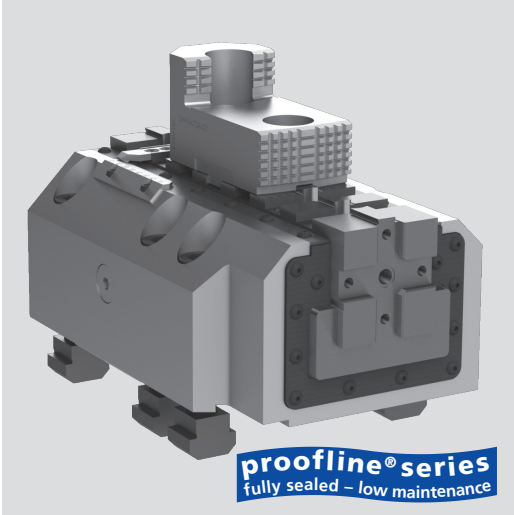

Application/customer benefits

- Manual radial setting and clamping of large components on large plates or chuck
- JBX: Standard mounting dimensions for SMW-AUTOBLOK chucks
- JBX-2G: Semifinished body and radial reference key to be adapted by customer
- Added to chucks it gives more gripping force to apply a higher torque on the workpiece
- Added to chucks it gives more contact points with the workpiece to better distribute the gripping force thus reducing distortion
- Very powerful and accurate clamping allowed by strong design
- Suitable for vertical machines thanks to the fully protected body
- Use of standard hard or soft jaw on top of the master jaw or special frontal jaws on the front side of the master jaw
- TONGUE & GROOVE master jaws (type "American Standard")

Technical features

- Manual gripping force applied by a strong and protected screw on a strong and rigid master jaw
- Manual and fine setting of master jaws for workpiece centering
- Protection from contamination with seals along the master jaw profiles
- Designed to work on SMW-Autoblok large manual or power chucks or on special plates
- Body designed for better chip evacuation

Standard equipment

Manual jaws box
1 radial key
6 T-nuts and mounting screws (only JBX)

Ordering example

Qty. 1 / 2 / 3 / 4 manual jaw box JBX 300
Id. No. 77653003
Option: Actuation key Id. No. 11122700

Maximum protection

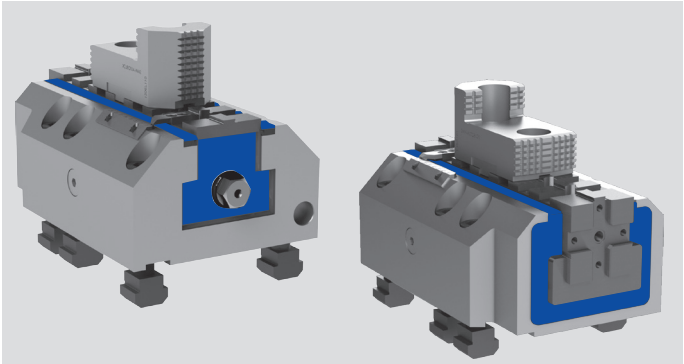

Master jaw protected on each side by steel profiles. Maximum protection from the penetration of chips, swarf, rubber and coolant allows less maintenance, working in bad environments and for a longer operative life.

Flexibility of use

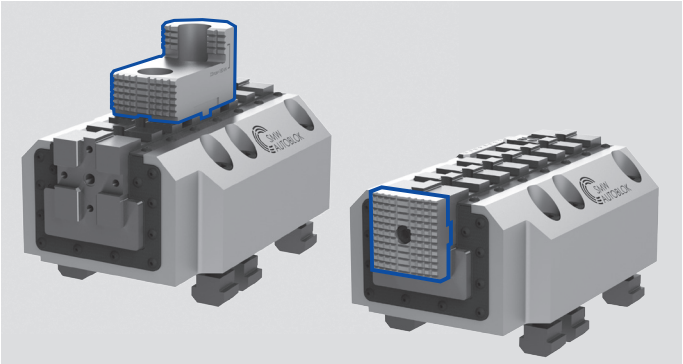

The jaw box can carry both standard or special, hard or soft jaws mounted on the upper side of the master jaw or special jaws mounted on the front side of the master jaw. The jaws on the front side allow optimal clamping in the same axis of the master jaws thus reducing deformation of the jaw and the jaw box. This allows a more rigid and accurate clamping. Also the frontal jaw option increases the flexibility allowing the customer to clamp the component in a very low area where it would be impossible to clamp with traditional jaws mounted on the upper side of the master jaw.

Technical data

SMW-AUTOBLOK Type Id. No.		JBX 300 77653003	JBX-2G 300 77653009	JBX-2G 400 77654003
Jaw stroke (manual setting)	mm	50	50	100
Max. manual operating torque	Nm	200	200	400
Max. gripping force	kN	50	50	100
Weight (without top jaws)	kg	50	50	90
Hard top jaw (piece)*	Id. No.	12087111	12087111	12087111
Soft top jaw (piece)*	Id. No.	12044050	12044050	12044050
Soft top jaw long (piece)*	Id. No.	12045051	12045051	12045051
Soft top jaw for master jaw front side (piece)*	Id. No.	65653007	65653007	65653007

* The soft and tempered jaws are not supply, the Id. No. are indicated in the table.

High precision, resistance and power manual jaw box

- Accessory for face plates, 4 jaws independent manual or other chucks
- Internal or external clamping

JBX-2G

Manual jaw box with semi-finished body

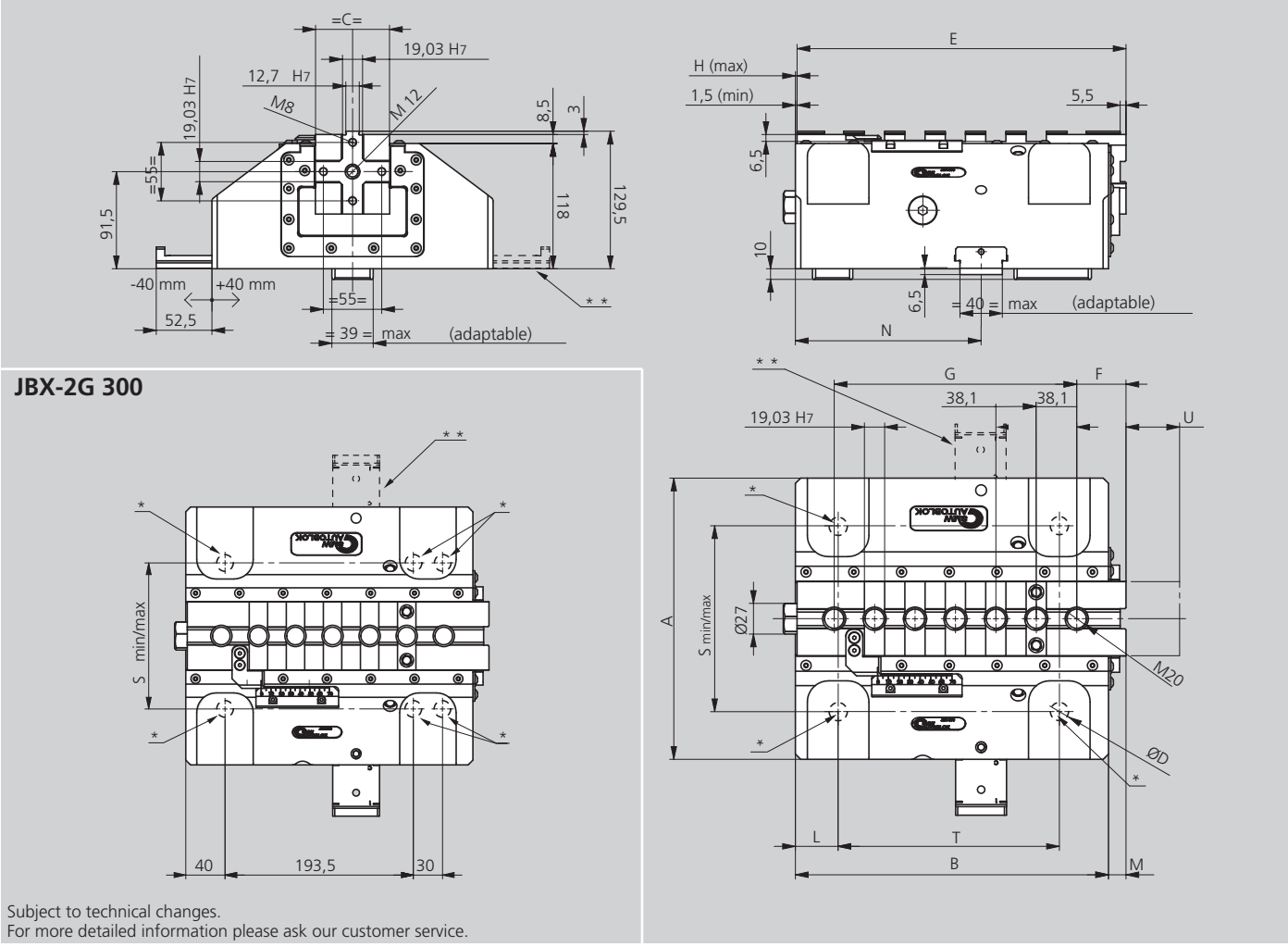

Subject to technical changes.
For more detailed information please ask our customer service.

SMW-AUTOBLOK Type		JBX-2G 300	JBX-2G 400
A	mm	265	310
B	mm	295	380
C	mm	70	80
ØD Min. / max.	mm	17-25	21-31
E	mm	310	395
F	mm	46.4	55.2
G	mm	228.6	304.8
H	mm	51.5	101.5
L	mm	40	57.5
U Stroke	mm	50	100
M	mm	16.5	16.5
N	mm	175	225
S Screws M16-M20 min. *	mm	150	-
S Screws M16-M20 max. *	mm	230	-
S M20-M24 nuts min. *	mm	175	210
S M20-M24 nuts max. *	mm	220	260
S M30 nuts min. *	mm	-	220
S M30 nuts max. *	mm	-	260
T	mm	208.5	250

* All these elements have to be worked according to the needs of the customer. If the customer will make these modifications, they must be approved by the SMW-AUTOBLOK technical office. Before making the modifications, we suggest to request the jaw box 2D or 3D drawing.
Note that the minimum screws size must be M16 or M20.

** In case of interference, the radial reference key can be mounted on the other side of the JBX-2G.

JBX

Manual jaw box
SMW-AUTOBLOK standard mounting dimensions

JBX-2G

Manual jaw box
with semi-finished body

High precision, resistance and power manual jaw box

- Accessory for face plates, 4 jaws independent manual or other chucks
- Internal or external clamping

JBX 300

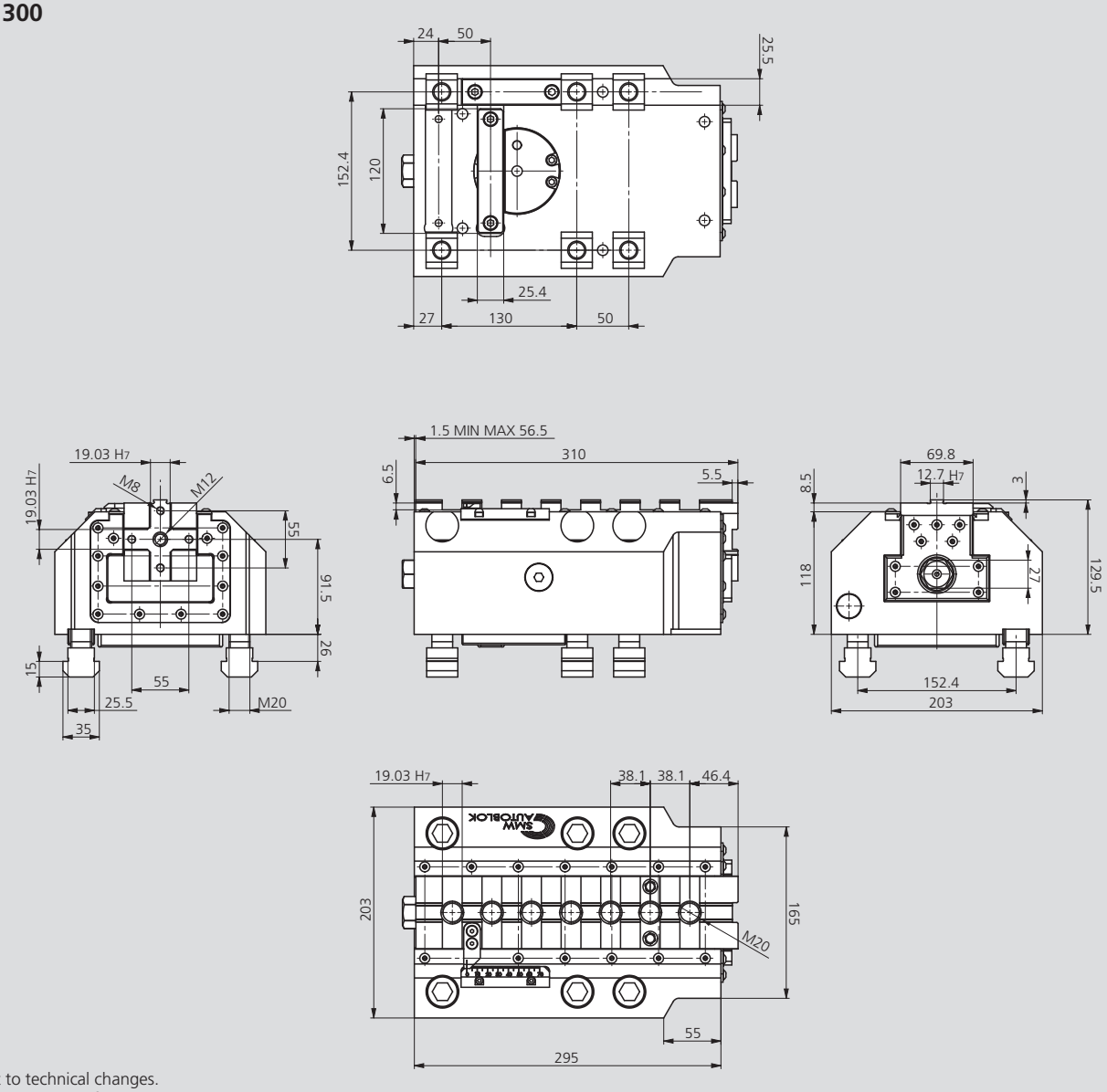

Subject to technical changes.
For more detailed information please ask our customer service.

Optional 5:1 torque multiplier for JBX and JBX-2G

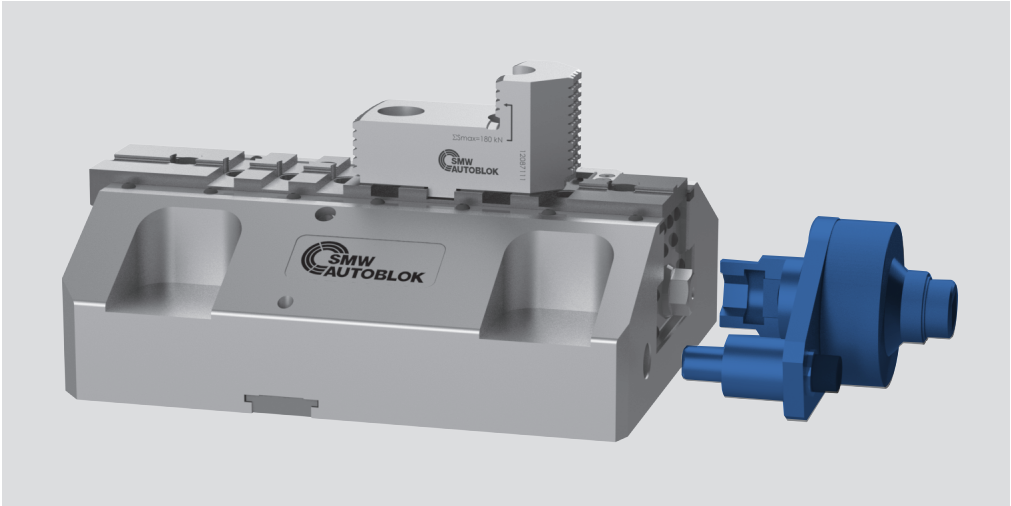

To achieve the maximum gripping force and speed, the easiest and more comfortable way is to use this multiplier that will increase the input torque times 5.
Id. No. 13506320

Notes

Centco4-MLW

INCH
SERRATION

4-jaw manual chuck

- 2+2 self centering
- Independent self centering clamping in 2 axis
- Weight-optimized chuck body

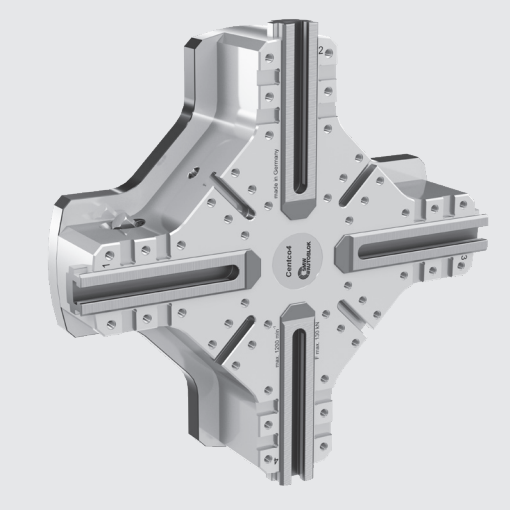

Application/customer benefits

- Independent self centering clamping in 2 axis via 1 central, manual actuating mechanism
- Mechanical centering of the workpiece
- Clamping of every workpiece geometry possible
- Weight-optimized chuck body
- Less workpiece deformation compared to 3-jaw chucks
- Long lifetime due to case hardened parts
- Large range of standard top jaws
- Suitable for OD and ID clamping

Technical features

- Centrifugal force compensation
- Optimized lubrication system

Standard equipment

4-jaw manual chuck,
8 pieces T-nuts and bolts
Actuation wrench

Ordering example

Centco4-MLW-D-600-4

Function / Application examples

2+2 self centering and compensating clamping*

In the beginning the jaw pairs **Z1** + **Z2** only apply a centering force that is necessary to center the workpiece. Only if both jaw pairs **Z1** and **Z2** are in contact with the workpiece, the clamping force necessary for machining is applied.

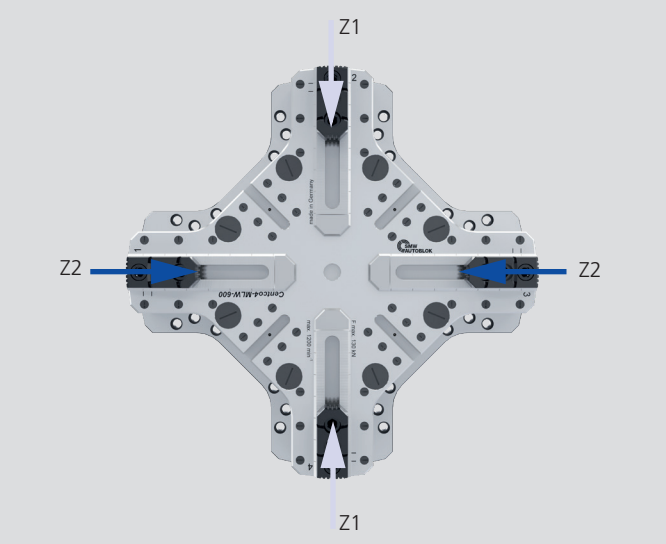

2+2 self centering clamping of round or thin-walled workpieces

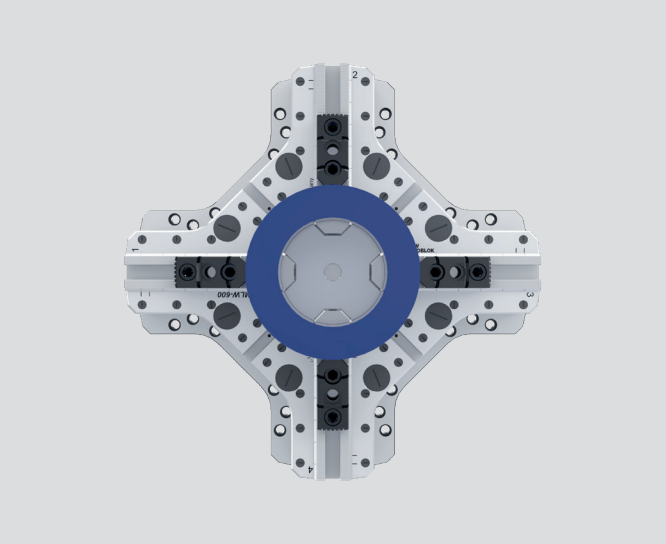

2+2 self centering and compensating clamping of rectangular or square workpieces

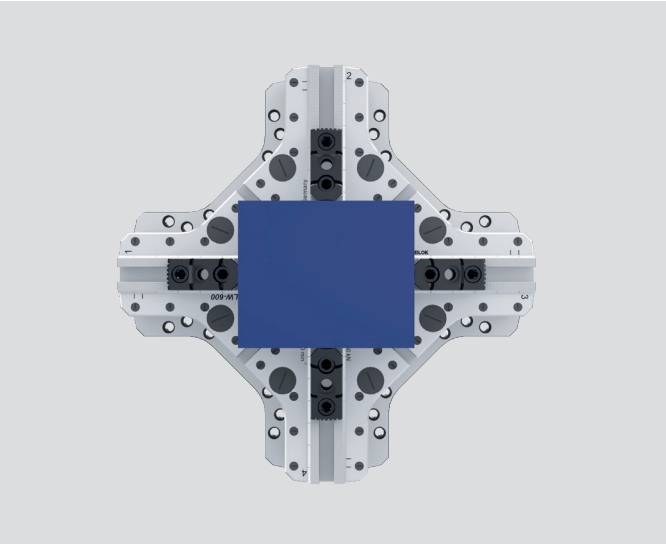

2+2 self centering and compensating clamping of unshaped workpieces

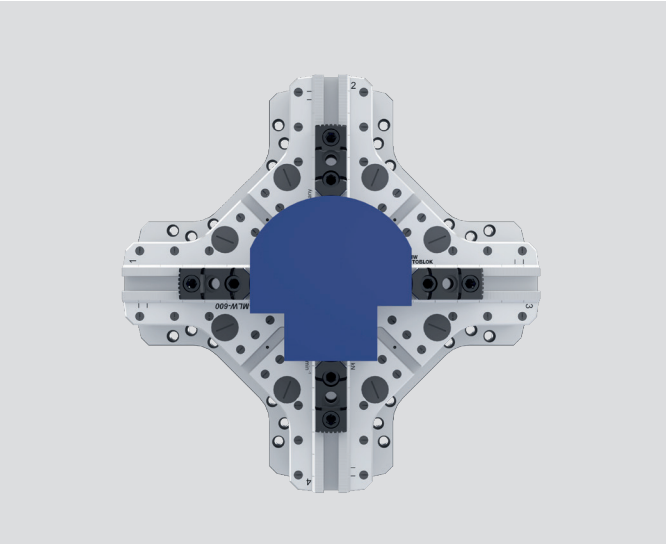

* **Z1**: Self centering clamping axis 1 / **Z2**: self centering clamping axis 2
Z1 is compensating to **Z2**

4-jaw manual chuck

- 2+2 self centering
- Independent self centering clamping in 2 axis
- Weight-optimized chuck body

Centco4-MLW-D

INCH
SERRATION

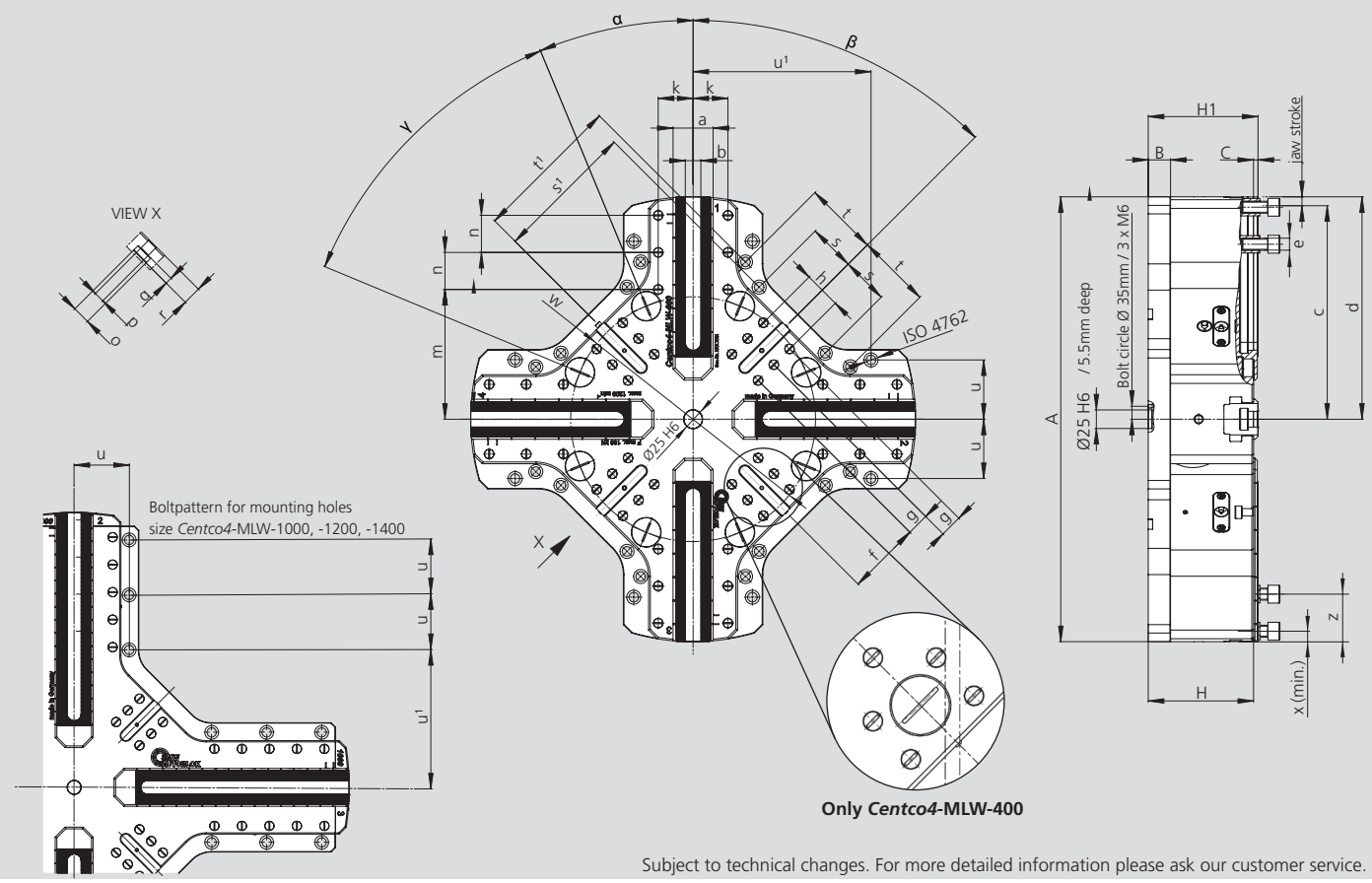

Subject to technical changes. For more detailed information please ask our customer service.

SMW-AUTOBLOK Type *Centco4*-MLW-D			400-4 163180	600-4 163210	750-4 163240	1000-4 163270	1200-4 163470	1400-4 163520
Outside diameter	**A**	mm	400	600	750	1000	1200	1400
Base plate height	**B**	mm	25	30	30	36	36	36
	C	mm	5	6	6	6	6	6
Chuck height	**H**	mm	118	142	142	170	170	170
	H1	mm	123	148	148	176	176	176
Jaw width	**a**	mm	49	54	54	69	69	69
Slot width	**b**	mm	17	21	21	25.5	25.5	25.5
Min.	**c**	mm	179.5	288	363	486	586	686
Max.	**d**	mm	186	300	375	500	600	700
Bolt ISO4762-12.9	**e**	mm	M12	M16	M16	M20	M20	M20
	f	mm	80	99	99	138	138	138
	g	mm	2 x 30	2 x 30	2 x 30	2 x 30	2 x 30	2 x 30
	h	mm	50	50	50	60	60	60
	k	mm	37	47	47	70	70	70
	m	mm	145	175	200	255	255	255
	n	mm	30	2 x 50	3 x 50	4 x 50	6 x 50	8 x 50
T-slot width	**o**	mm	-	24	24	30	30	30
T-slot width	**p**	mm	-	14	14	18	18	18
Height of width **o**	**q**	mm	-	9.2	9.2	12.2	12.2	12.2
Total depth T-slot	**r**	mm	-	25	25	30	30	30
	s/s¹	mm	63 / 152.1	63 / 189	63 / 189	-	-	-
	t/t¹	mm	-	100 / 200	100 / 200	-	-	-
	u/u¹	mm	-	80 / 240	80 / 240	100 / 250	100 / 250	100 / 250
	w	mm	235 / 4 x 90°	330.2	330.2	-	-	-
Min.	**x**	mm	13.7	12	12	14	14	14
Min. / max.	**z**	mm	25 / 115	36 / 190	36 / 265	42 / 358	42 / 457	42 / 558
	α	deg.	45	17.5	17.5	-	-	-
	β	deg.	45	45	45	45	45	45
	γ	deg.	-	45	45	-	-	-
Serration		inch	1/16“	1/16“	1/16“	3/32“	3/32“	3/32“
Max. speed		min^{-1}	2500	1200	1000	800	700	600
Max. total clamping force		kN	110	130	130	180	180	180
at max. actuating torque (Md)		Nm	120	200	200	200	200	200
Stroke per jaw		mm	6.5	12	12	14	14	14
Compensation stroke per jaw		mm	5	10	10	12	12	12
Weight (without jaws)		kg	77	165	201	410	480	530
Moment of inertia		$kg \cdot m^2$	1.3	5.5	9.83	36.4	55.6	80

Centco4-MLW-D

INCH
SERRATION

■ Ordering review / Equipment review
■ Jaws*

Ordering review

SMW-AUTOBLOK Type Centco4-MLW-D	400-4	600-4	750-4	1000-4	1200-4	1400-4
Id.-No.	163180	163210	163240	163270	163470	163520

Equipment review

SMW-AUTOBLOK - Assembling tool	400-4	600-4	750-4	1000-4	1200-4	1400-4
Id.-No.	-	0BM6401				

Jaws

MHB-D (INCH SERRATION)

Hard, reversible stepped top jaws

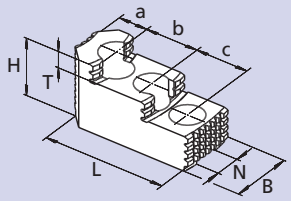

Centco4-MLW-D	400-4	600-4	750-4	1000-4	1200-4	1400-4
Jaw type	MHB-D 200	MHB-D 251	MHB-D 251	MHB-D 500	MHB-D 500	MHB-D 500
Id. No.	12082038	12083038	12083038	12084548	12084548	12084548
Serration	1/16" x 90°	1/16" x 90°	1/16" x 90°	3/32" x 90°	3/32" x 90°	3/32" x 90°
B	40	45	45	60	60	60
H	45	56	56	75	75	75
L	82	106.2	106.2	140.8	140.8	140.8
T	10.5	13.5	13.5	19	19	19
N	17	21	21	25.5	25.5	25.5
a	19	26	26	38	38	38
b	23	30	30	38	38	38
c	23	30	30	38	38	38
kg / set	2.3	2.9	2.9	9.5	9.5	9.5

MWB-D (INCH SERRATION)

Soft top jaws

Tall version

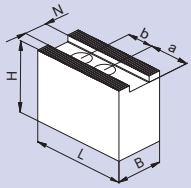

Centco4-MLW-D	400-4	600-4	750-4	1000-4	1200-4	1400-4
Jaw type	MWB-D 200	MWB-D 250	MWB-D 250	MWB-D 400	MWB-D 400	MWB-D 400
Id. No.	5318837	5319680	5319680	5319831	5319831	5319831
Serration	1/16" x 90°	1/16" x 90°	1/16" x 90°	3/32" x 90°	3/32" x 90°	3/32" x 90°
B	40	50	50	60	60	60
H	60	80	80	90	90	90
L	90	120	120	170	170	170
N	17	21	21	25.5	25.5	25.5
a	43	62	62	90	90	90
b	22	28	28	35	35	35
kg / set	4.1	9.2	9.2	21.6	21.6	21.6

AWB-D (INCH SERRATION)

Soft top jaws

Low version

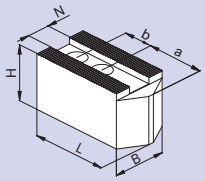

Centco4-MLW-D	400-4	600-4	750-4	1000-4	1200-4	1400-4
Jaw type	AWB-D 200	AWB-D 250	AWB-D 250	AWB-D 400	AWB-D 400	AWB-D 400
Id. No.	5318838	5319681	5319681	5319834	5319834	5319834
Serration	1/16" x 90°	1/16" x 90°	1/16" x 90°	3/32" x 90°	3/32" x 90°	3/32" x 90°
B	40	50	50	60	60	60
H	40	50	50	60	60	60
L	110	120	120	170	170	170
N	17	21	21	25.5	25.5	25.5
a	53	70	70	115	115	115
b	22	28	28	35	35	35
kg / set	2.7	5.4	5.4	14.5	14.5	14.5

SBS-D (INCH SERRATION)

Soft pie jaws

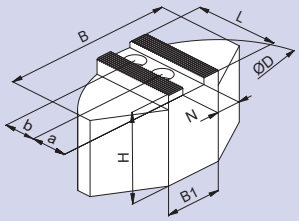

Centco4-MLW-D	400-4	600-4	750-4	1000-4	1200-4	1400-4
Jaw type	SBS-D 200	SBS-D 200	SBS-D 200	SBS-D 400	SBS-D 400	SBS-D 400
Id. No.	5318839	5319684	5319684	5319832	5319832	5319832
Serration	1/16" x 90°	1/16" x 90°	1/16" x 90°	3/32" x 90°	3/32" x 90°	3/32" x 90°
B	140	180	180	330	330	330
B1	64	50	50	190	190	190
D	200	250	250	440	440	440
H	60	70	70	85	85	85
L	70	80	80	155	155	155
N	17	21	21	25.5	25.5	25.5
a	35	30	30	85	85	85
b	22	29	29	35	35	35
kg / set	10.3	18.3	18.3	71	71	71

SBA-D (INCH SERRATION)

Soft pie jaws aluminium light version

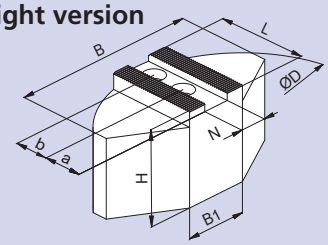

Centco4-MLW-D	400-4	600-4	750-4	1000-4	1200-4	1400-4
Jaw type	SBA-D 200	SBA-D 250	SBA-D 250	SBA-D 400	SBA-D 400	SBA-D 400
Id. No.	5318840	5319685	5319685	5319833	5319833	5319833
Serration	1/16" x 90°	1/16" x 90°	1/16" x 90°	3/32" x 90°	3/32" x 90°	3/32" x 90°
B	120	160	160	330	330	330
B1	40	50	50	190	190	190
D	200	250	250	440	440	440
H	58	78	78	98	98	98
L	72.5	87.5	87.5	160	160	160
N	17	21	21	25.5	25.5	25.5
a	35	40	40	85	85	85
b	22	29	29	35	35	35
kg / set	3.7	7.2	7.2	32	32	32

* SMW-AUTOBLOK is recommending not to clamp any diameters, that are larger than the chuck O.D.

SMW-AUTOBLOK Jaws-catalog
Request or download:
www.smw-autoblok.de

Centco4-MLW-D

INCH
SERRATION

NST T-Nuts suitable for *Centco4*-MLW-D

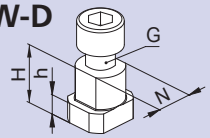

Centco4-MLW-D	400-4	600-4	750-4	1000-4	1200-4	1400-4
T-nut type	NST17	NST21	NST21	NST25	NST25	NST25
Id. No.	016021	014788	014788	014812	014812	014812
N	17	21	21	25.5	25.5	25.5
H	23	27	27	29	29	29
h	9	10	10	11	11	11
Cyl.-screw G ISO 4762-12.9	M12 x 30	M16 x 35	M16 x 35	M20 x 40	M20 x 40	M20 x 40
Torque Md max. (Nm)	70	150	150	250	250	250

Jaw pre positioning fixture

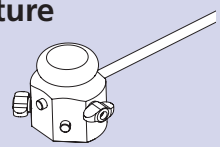

Centco4-MLW	400-4	600-4	750-4	1000-4	1200-4	1400-4
Id. No.	-	163514	163514	163515	163516	163517

Center pin

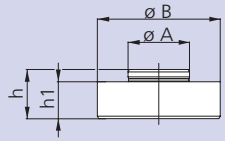

Centco4-MLW	400-4	600-4	750-4	1000-4	1200-4	1400-4
Id. No.	163239					
Ø A	25 h6					
Ø B	50 g6					
h	20					
h1	15					

Slot-nuts

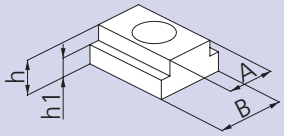

Id.-No.	209210	209194	209173
A	12	14	16
B	20	20	20
h	10	10	10
h1	5.5	5.5	5.5
Id.-No. Cyl.-screw (not included)	010166	010166	010166

Important for maintenance and safe operation, to be ordered with the chuck

Grease K67

Special grease for manual and power chucks

Cartridge 14 Oz. (DIN 1284)
Grease content 500g
Id. No. 10731223

Can 1000 g
Id. No. 10731224

- High adhesion
- High resistance against coolant
- High load bearing capacity
- Low friction coefficient
- High gripping force
- Avoids tribocorrosion

Grease gun

Grease gun (DIN 1283) for cartridges 14 Oz. (DIN 1284)
■ Also refillable from grease can 1000 g

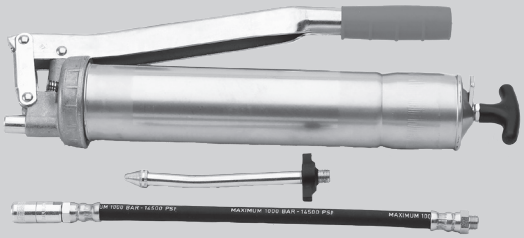

Lubrication set Id. No. 083726
Supply range
- Grease gun
- 1 Adapter flexible for high pressure grease nipple
- 1 Adapter for cone grease nipple

Stationary chucks pneumatic / hydraulic

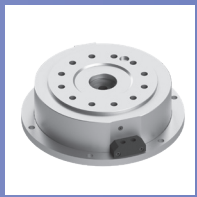

Page 352

USC
With stroke control

Pneumatic static cylinder
Ø 140 - 260 mm

- Unit with static cylinder
- With stroke control
- Can be equipped with different types of chucks

Page 354

US-CL
With 2 jaws long stroke chucks

US-A
With 3 jaws long or normal stroke chucks

Stationary cylinder and chuck unit, hydraulic
Ø 80 - 315 mm

- Unit with static cylinder and chuck
- Closed center chucks type CL/AN/AL

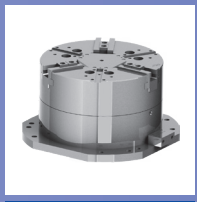

Page 356

US - large diameters
Pneumatic static cylinder
2 or 3 or 4 jaws

Pneumatic static cylinder and chuck unit
Ø 400 - 800 mm

- Normal or long stroke depending on chuck model
- 2/3/4 jaws depending on chuck model & diameter
- Sealed or not sealed chucks depending on chuck model

Page 358

HB-D
INCH SERRATION
2 or 3 jaws

HB-C
TONGUE & GROOVE
3 jaws

Stationary chuck, hydraulic
Ø 130 - 315 mm

- Built-in hydraulic cylinder
- 2 and 3 jaws

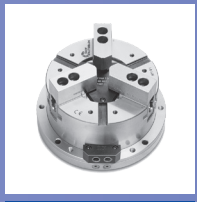

Page 360

PB-D
INCH SERRATION
2 or 3 jaws

PB-C
TONGUE & GROOVE
3 jaws

Stationary chuck, pneumatic
Ø 130 - 315 mm

- Built-in pneumatic cylinder
- 2 and 3 jaws

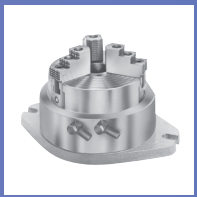

Page 362

STP
INCH SERRATION
3 jaws

Stationary chuck, pneumatic
Ø 125 - 280 mm

- Built-in pneumatic cylinder
- With through-hole

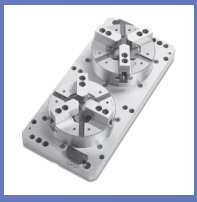

Page 364

M2-PB
Fixture
with 2 chucks

Multiple chucks on fixtures, pneumatic
Ø 130 - 315 mm

- Built-in pneumatic cylinders
- 2 and 3 jaws

Page 366

PBI-D
INCH SERRATION
2 or 3 jaws

PBI-C
TONGUE & GROOVE
3 jaws

Chuck for indexing tables
Ø 165 - 315 mm

- Manifold for air supply (only for low r.p.m.)
- Built-in cylinder
- 2 and 3 jaws

Page 366

Centco4
2 + 2 self centering

4-jaw chuck Ø 210 - 630 mm

- Independent self centering clamping in 2 axis via 1 central actuating mechanism
- Centrifugal force compensation
- 2 + 2 jaws

USC

Pneumatic static cylinder

Stationary cylinder + chuck unit Ø 140 - 260 mm

- Can be equipped with different types of chucks
- With stroke control

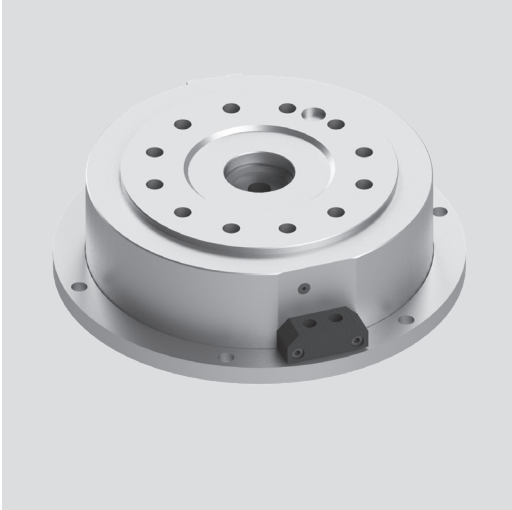

Application/customer benefits

- Gripping of components on vertical or horizontal machining centers

Technical features

- Standard pneumatic cylinder can be equipped with various type of chucks:
  - 2 / 3 / 4 jaws versions depending on chuck model and diameter
  - Sealed or unsealed chucks
  - With serrated or Tongue & Groove master jaw available
  - Normal or long stroke depending on chuck model and diameter
- Permanent air pressure required
- Optional SAB safety valve to hold pressure during pallet transfer

Remark: The clamping unit is made of static cylinder + connection kit + chuck to be selected.
For chuck details, please see the technical data of the selected chuck.

Standard equipment

Static cylinder
the connection kit must be added,
see the table on next page

Ordering example

Please see the below table for part numbers and part descriptions

Accessories

Valve SAB1 Id. No. 27581610 for USC 140/170
Valve SAB2 Id. No. 27581620 for USC 210/260
Mounting brackets

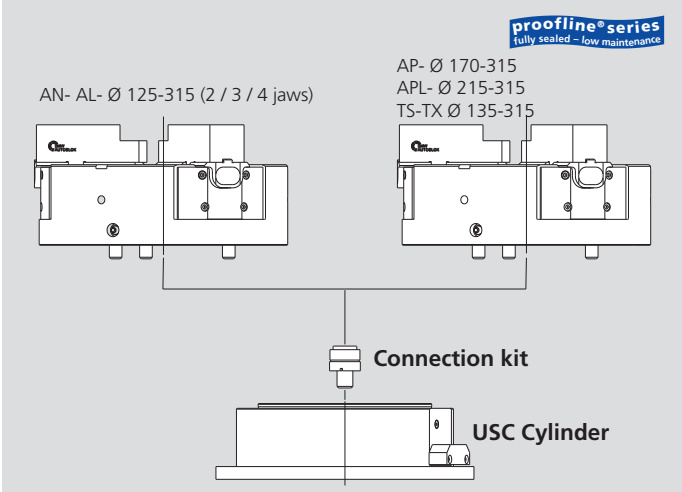

- **USC-AN** = cylinder equipped with a 2 / 3 jaw chuck type AN- (normal stroke). Chuck until to Ø 315 mm
- **USC-AL** = cylinder equipped with a 2 / 3 jaw chuck type AL- (long stroke). Chuck until to Ø 315 mm
- **USC-TS** = cylinder equipped with a 2 / 3 jaw chuck type TS- Chuck from Ø 135 to 315 mm
- **USC-TX** = cylinder equipped with a 3 jaw chuck. Chuck from Ø 170 to 315 mm
- **USC-AP** = cylinder equipped with a 3 jaw chuck type AP- (normal stroke). Chuck until to Ø 315 mm proofline® series fully sealed – low maintenance
- **USC-APL** = cylinder equipped with a 3 jaw chuck type APL- (long stroke). Chuck Ø 170 to 315 mm proofline® series fully sealed – low maintenance

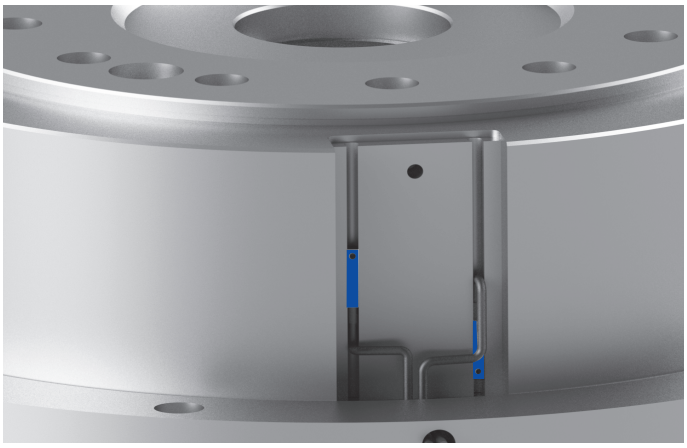

Stroke control
The stroke control system consists of two built in magnets and two external sensors (Id.-Nr. 71834910) reading the axial position of the cylinder piston and consequently of chuck jaws mounted on it.
The stroke control gives the following signals: „chuck fully open", „chuck fully closed" or „part clamped" positions.

Technical data

SMW-AUTOBLOK Type Id. No.		USC 140 97501407	USC 170 97501702	USC 210 97502106	USC 260 97502601
Piston area-chuck (open)	cm²	133	189	269	434
Piston area-chuck (closed)	cm²	126	176	249	409
Max. operating pressure	bar	7	7	7	7
Piston stroke	mm	17	22	26	31
Pushforce at 6 bar	kN	8	11	16	26
Pullforce at 6 bar	kN	7.5	10.5	15	24.5
Cylinder unit mass	kg	3.3	5	7	12.5

Stationary cylinder + chuck unit Ø 140 - 260 mm

USC

- Can be equipped with different types of chucks
- With stroke control

Pneumatic static cylinder

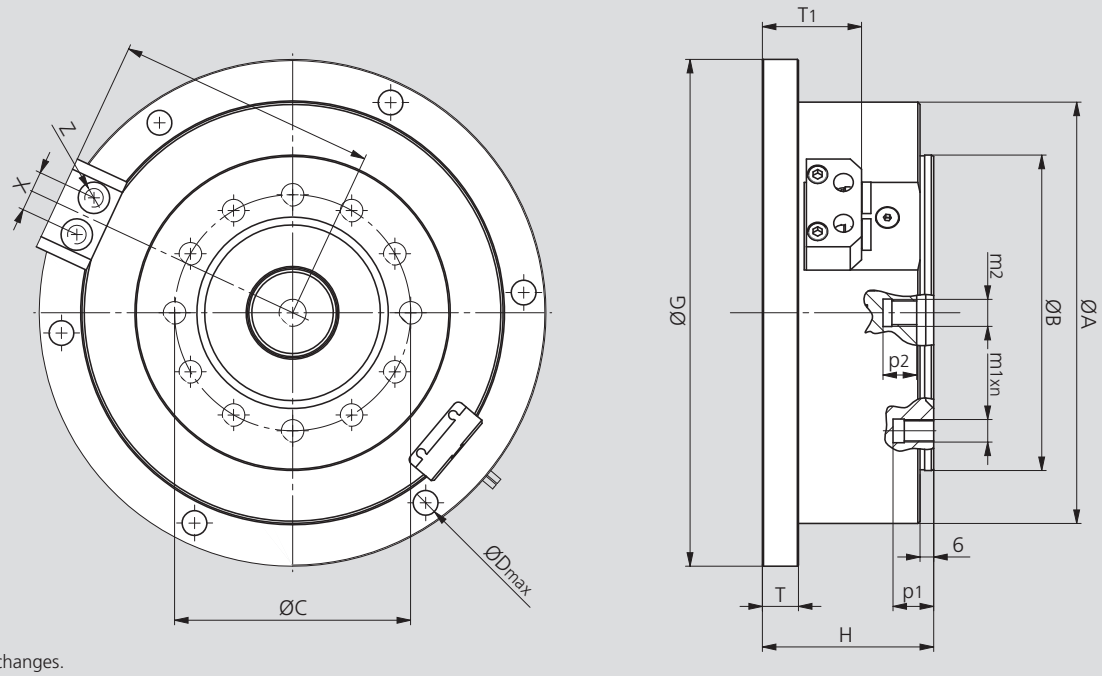

Subject to technical changes.
For more detailed information please ask our customer service.

SMW-AUTOBLOK Type Id. No.		USC 140 97501407	USC 170 97501702	USC 210 97502106	USC 260 97502601
A	mm	162	187	217	275
B	mm	115	140	170	220
C	mm	82.6	104.8	133.4	171.4
D	mm	11	11	11	13
G	mm	200	225	255	327
H	mm	61.5	76	83	95
Q	mm	98	110.5	129.5	158.5
T	mm	16	16	16	16
T1	mm	38.5	40,5	43.5	43.5
X	mm	18	18	22	22
Z	inch	1/8"	1/8"	1/4"	1/4"
m1	mm	M10	M10	M12	M16
m2	mm	M10	M12	M16	M20
n	mm	12x	12x	12x	12x
p1	mm	14	18	19	23
p2	mm	18	15	21	25

Ordering review connection kit

Size	125 AN-AL	135 TS	165 AN-AL	170 AP	170 TS/TX	210 AN-AL	210 TS-TX	215 AP-APL	250 AN-AL	250 TS-TX	260 AP-APL	315 AN-AL	315 TS-TX	315 AP-APL
USC 140	75511410	75511470	-	-	-	-	-	-	-	-	-	-	-	-
USC 170	-	-	75511760	75511760	75511770	-	-	-	-	-	-	-	-	-
USC 210	-	-	-	-	-	75512110	75512170	75512160	-	-	-	-	-	-
USC 260	-	-	-	-	-	-	-	-	75512610	75512670	75512660	75512620	75512670	75512660

- If the cylinder must operate an AN / AL chuck (with 2 / 3 / 4 jaws and various jaw types), the chuck must be ordered separately.
- If the cylinder must operate an AP / APL chuck (only 3 jaws available and various jaw types), the chuck must be ordered separately.
- If the cylinder must operate a TS / TX chuck (only 3 jaws available and various jaw types), the chuck must be ordered separately.
- For technical information on the chucks, please see the specific catalogue page. (more information at general catalog turning).
- For the chucks p/ns, please see our price lists or ask a quotation to your nearest SMW-AUTOBLOK office.

US-CL

With 2 jaw long stroke chuck

US-A

With 3 jaw long or normal stroke chuck

Stationary cylinder + chuck unit Ø 80 - 315 mm

- Hydraulic cylinder module + chuck
- Closed center chucks type CL / AN / AL

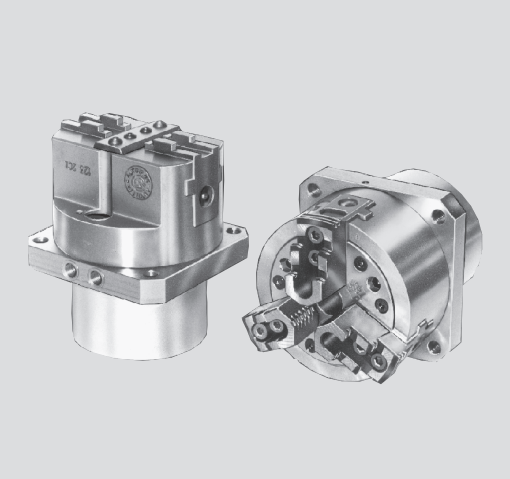

Application/customer benefits

- Gripping units designed to suit special purpose machines and transfer lines
- Also used as loading chucks to handle workpieces

Technical features

- Stationary hydraulic cylinder + chuck unit consisting of a modular cylinder and standard 2- or 3-jaw-chuck
- Permanent oil pressure required
- For chuck details please see technical data of the selected chuck

Remark: when ordering please specify the position of the oil connectors (on the side or on the back)

Standard equipment

Standard chuck with cylinder and connecting parts

Ordering example

US 125-CLC with rear oil connection, or
US 250-AND with side oil connection and chuck 90° revolved

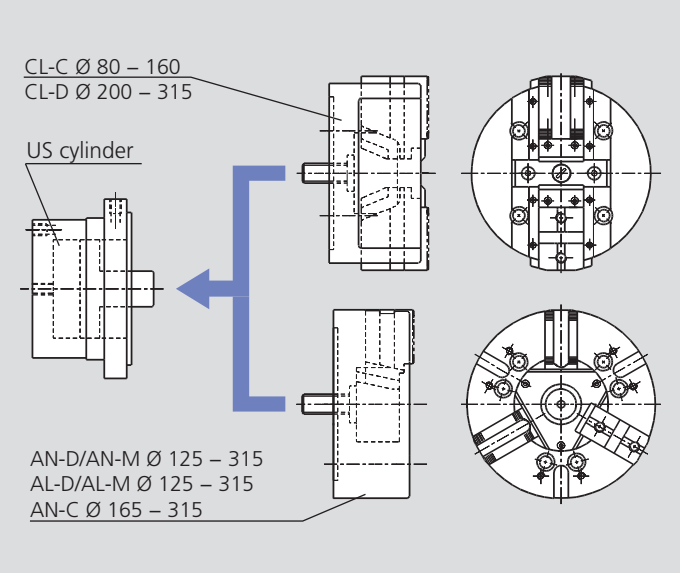

- **US-CL-C** = cylinder equipped with a 2 jaw chuck type CL-C (long stroke / tongue & groove). Chuck Ø 80 to 160 mm.
- **US-CL-D** = cylinder equipped with a 2 jaw chuck type CL-D (long stroke / inch serration). Chuck Ø 200 to 315 mm.
- **US-AN-D** = cylinder equipped with a 3 jaw chuck type AN-D (normal stroke / inch serration). Chuck Ø 125 to 315 mm.
- **US-AN-M** = cylinder equipped with a 3 jaw chuck type AN-M (normal stroke / metric serration). Chuck Ø 125 to 315 mm.
- **US-AL-D** = cylinder equipped with a 3 jaw chuck type AL-D (long stroke / inch serration). Chuck Ø 125 to 315 mm.
- **US-AL-M** = cylinder equipped with a 3 jaw chuck type AL-M (long stroke / metric serration). Chuck Ø 125 to 315 mm.
- **US-AN-C** = cylinder equipped with a 3 jaw chuck type AN-C (normal stroke / tongue & groove). Chuck Ø 165 to 315 mm.
- **Special units** = on request the US cylinder can be equipped with other chucks, for example with a quick jaw change chuck type AN-RM with stationary cylinder available.

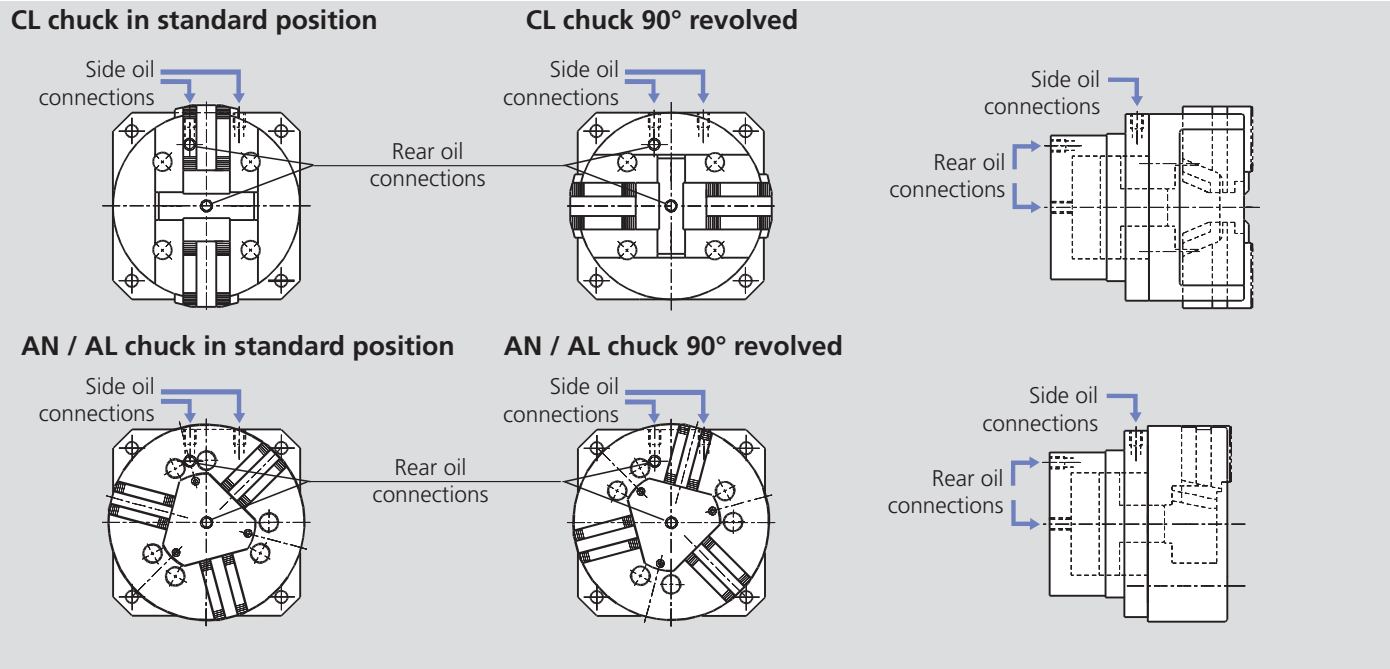

- The chuck can be mounted on the cylinder 90° revolved if the standard position creates interferences with the working cycle. Please specify in the order, if a revolved position is needed.
- The oil connections can be on the side or on the back of the cylinder in order to ease the installation of the gripping unit. Please specify in the order, which version is preferred.

Stationary cylinder + chuck unit Ø 80 - 315 mm

- Hydraulic cylinder module + chuck
- Closed center chucks type CL / AN / AL

US-CL

With 2 jaw long stroke chuck

US-A

With 3 jaw long or normal stroke chuck

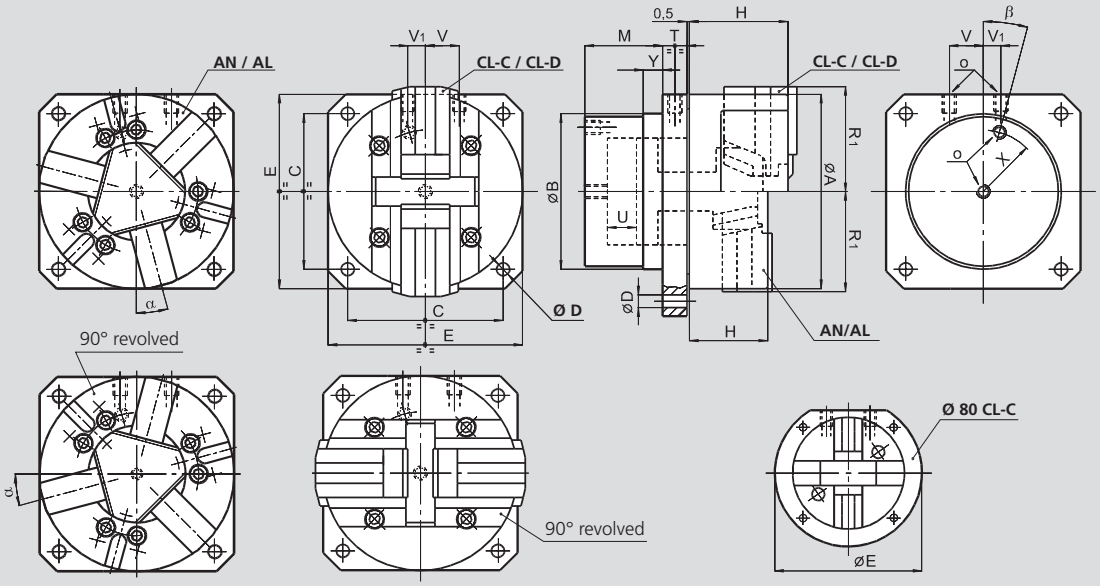

Subject to technical changes.
For more detailed information please ask our customer service.

US actuating cylinder dimensions

SMW-AUTOBLOK cylinder			US 80	US 100	US 125	US 160 US 165	US 200	US 250	US 315
Id. No. CL			77755008	77755010	77755013	77755016	77755120	77755025	77755031
Id. No. AL / AN			77755008	77755010	77755113	77755016	77755120	77755025	77755031
	B h7	mm	70	84	106	128	158	185	185
	C	mm	66	84	104	130	160	200	250
	D	mm	7	9	11	11	13.5	17	17
	E	mm	105	100	130	160	200	250	315
	M	mm	45	52	60	70	80	90	90
Oil connections	**O**	inch	1/8 BSP	1/8 BSP	1/4 BSP	1/4 BSP	3/8 BSP	3/8 BSP	3/8 BSP
	T	mm	16	16	20	20	25	25	25
	U	mm	11	14	20	25	30	35	35
	V	mm	15	18	12	28	35	41	41
	V1	mm	15	18	12	15	18	15	15
	X	mm	27	33	43	52	63	75	75
	Y	mm	10	10	10	20	20	20	20
	β	deg.	30°	30°	15°	15°	0°	0°	0°
Piston area		cm²	16	25	42	68	112	166	166

Units with CL-C and CL-D chucks (more information at general catalog turning page 84)

SMW-AUTOBLOK Type			US 80-CL-C	US 100-CL-C	US 125-CL-C	US 160-CL-C	US 200-CL-D	US 250-CL-D	US 315-CL-D
	A	mm	80	100	125	160	200	250	315
	H	mm	45	54	76	92	103	109	114
Chuck open	**R1**	mm	40	50	68	87	108	132	166
Max. pressure		bar	38	36	36	37	32	30	36
Max. gripping force		kN	9	14	24	40	55	78	95

Units with AN-D / AN-M / AN-C chucks (more information at general catalog turning page 42 and 46)

SMW-AUTOBLOK Type			US 125-AN-D US 125-AN-M	US 165-AN-D US 165-AN-M US 165-AN-C	US 210-AN-D US 210-AN-M US 210-AN-C	US 250-AN-D US 250-AN-M US 250-AN-C	US 315-AN-D US 315-AN-M US 315-AN-C
	A	mm	127	165	210	254	315
	H	mm	57	71	85	95	105
Chuck open	**R1**	mm	64	83	105	128	158
	α	deg.	0°	15°	15°	15°	15°
Max. pressure		bar	47	36	31	28	36
Max. gripping force		kN	56	70	105	140	180

Units with AL-D / AL-M chucks (more information at general catalog turning page 44)

SMW-AUTOBLOK Type			US 125-AL-D US 125-AL-M	US 165-AL-D US 165-AL-M	US 210-AL-D US 210-AL-M	US 250-AL-D US 250-AL-M	US 315-AL-D US 315-AL-M
	A	mm	127	165	210	254	315
	H	mm	57	71	85	95	105
Chuck open	**R1**	mm	67	86	109	133	164
	α	deg.	0°	15°	15°	15°	15°
Max. pressure		bar	60	44	45	39	45
Max. gripping force		kN	45	54	90	120	135

US - large diameters

Pneumatic static cylinder for 2 or 3 or 4 jaws

Stationary cylinder + chuck unit Ø 400 - 800 mm

- **Option for serrated or Tongue & Groove jaws**
- **Option of sealed or not sealed chucks**
- **Option of 2 / 3 / 4 jaws depending on chuck size and model**
- **Option of long or normal stroke depending on chuck size & model**

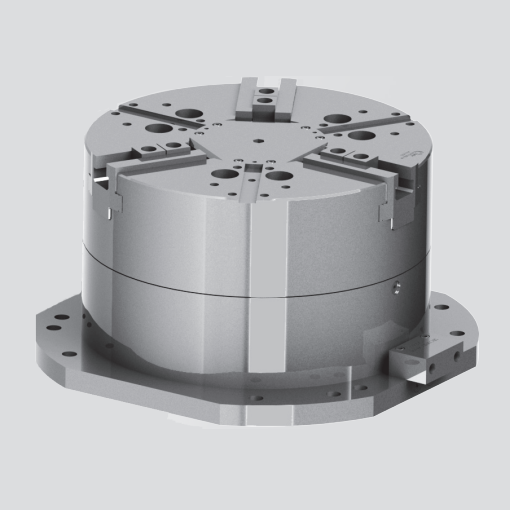

Application/customer benefits

- Gripping of large components on vertical or horizontal machining centers

Technical features

- Standard pneumatic cylinder to be equipped with various type of chucks:
  - 2 / 3 / 4 jaws versions depending on chuck model and diameter
  - Sealed or not sealed chucks with serrated or TONGUE & GROOVE master jaw available
  - Normal or long stroke depending on chuck model and diameter
- Permanent air pressure required
- Optional SAB safety valve to hold pressure during pallet transfer

Remark: the clamping unit is made of standard cylinder + eventual connection kit (for AP and APL chucks only) + chuck to be selected.
For chuck details, please see the technical data of the selected chuck

Standard equipment

Static cylinder with connecting parts for IN / IL chucks.
For AP and APL chucks a specific connecting kit must be added

Ordering example

US-400-AN

AN- AL- Ø 400 (2 / 3 / 4 jaws)
IN- IL- Ø 500-630-800 (3 / 4 jaws)

AP- Ø 400
APL- Ø 400-500-630-800 (3 jaws only)

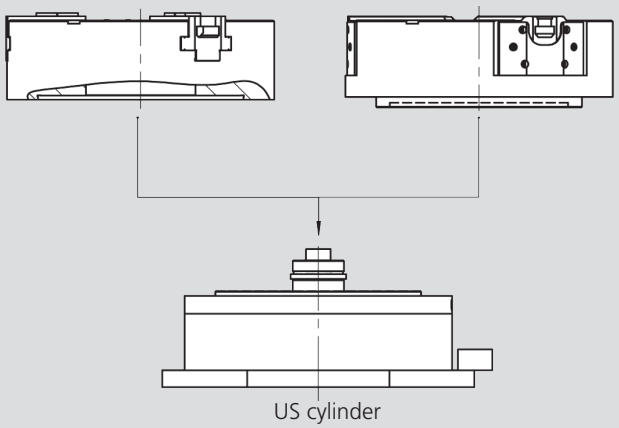

US cylinder

- **US-AN** = cylinder equipped with a 3-jaw chuck type AN- (normal stroke). Chuck Ø 400 mm.
- **US-AL** = cylinder equipped with a 3-jaw chuck type AL- (long stroke). Chuck Ø 400 mm.
- **US-IN** = cylinder equipped with a 3-jaw chuck type IN- (normal stroke). Chuck Ø 500 to 800 mm.
- **US-IL** = cylinder equipped with a 3-jaw chuck type IL- (long stroke). Chuck Ø 500 to 800 mm.
- **US-AP** = cylinder equipped with a 3-jaw chuck type AP- (normal stroke). Chuck Ø 400 mm.
- **US-APL** = cylinder equipped with a 3-jaw chuck type APL- (long stroke). Chuck Ø 400 to 800 mm.

Technical data

SMW-AUTOBLOK Type		US-400 AN / AL	US-400 AP / APL	US-500 APL	US-630 APL	US-800 APL	US-500 IN / IL	US-630 IN / IL	US-800 IN / IL
Piston area-chuck (open)	cm²	800	800	1256	1256	1256	1256	1256	1256
Piston area-chuck (closed)	cm²	760	760	1211	1211	1211	1211	1211	1211
Max. operating pressure	bar	7	7	7	7	7	7	7	7
Mass of cylinder unit	kg	118	118	175	175	175	175	175	175
Gripping force at 6 bar "N"	kN	135	125	-	-	-	175	175	175
Gripping force at 6 bar "L"	kN	80	80	130	130	130	130	130	130

Stationary cylinder + chuck unit Ø 400 - 800 mm

- Option for serrated or Tongue & Groove jaws
- Option of sealed or not sealed chucks
- Option of 2 / 3 / 4 jaws depending on chuck size and model
- Option of long or normal stroke depending on chuck size & model

US - large diameters

Pneumatic static cylinder for 2 or 3 or 4 jaws

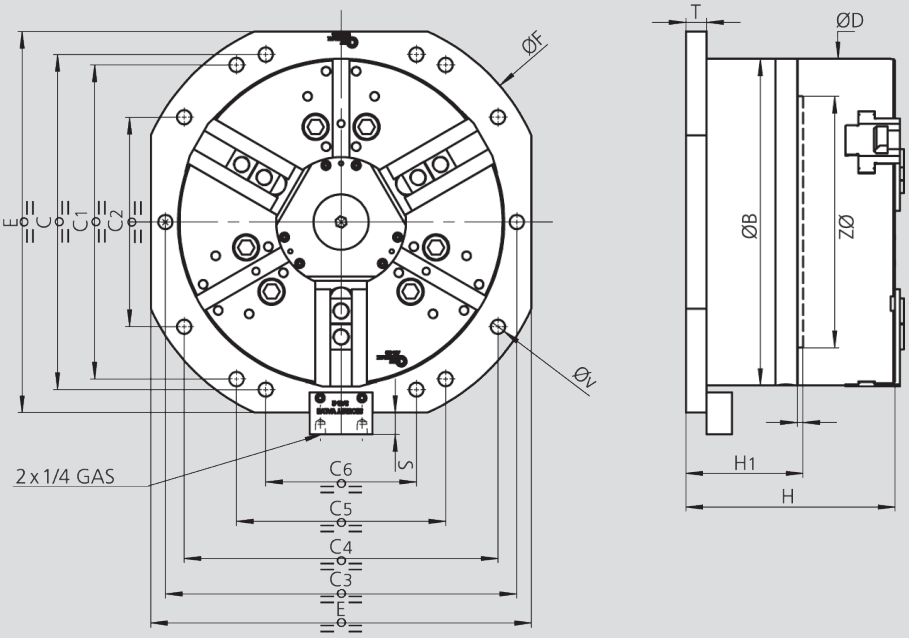

Subject to technical changes.
For more detailed information please ask our customer service.

SMW-AUTOBLOK Type			US-400 AN/AL	US-400 AP/APL	US-500 APL	US-630 APL	US-800 APL	US-500 IN/IL	US-630 IN/IL	US-800 IN/IL
O. D. cylinder	**B**	mm	390	390	475	475	475	475	475	475
	C	mm	400	400	-	-	-	-	-	-
	C1	mm	375	375	300	300	300	300	300	300
	C2	mm	250	250	-	-	-	-	-	-
	C3	mm	-	-	500	500	500	500	500	500
	C4	mm	375	375	400	400	400	400	400	400
	C5	mm	250	250	-	-	-	-	-	-
	C6	mm	180	180	-	-	-	-	-	-
Ø chuck	**D**	mm	390	390	500	630	800	510	630	800
	E	mm	455	455	525	525	525	525	525	525
	E1	mm								
	ØF	mm	500	500	538	538	538	538	538	538
	H	mm	250	273	300	310	330	270	290	290
	H1	mm	140	140	146	146	146	146	146	146
	I	mm	7	7	7	7	7	7	7	7
	T	mm	25	25	25	25	25	25	25	25
	ØV	mm	17	17	17	17	17	17	17	17
	ØZ h7	mm	300	300	380	380	380	380	380	380

Ordering review

SMW-AUTOBLOK Size	400	500	630	800
A: Cylinder Id. No. (for all versions)	97504004	97506302	97506302	97506302
B: Kit Id. No. (only for „AP“ & „APL“ chucks)	97634004	97635002	97636302	97646302

- If the cylinder operates a IN / IL or a AN / AL chuck (with 2 / 3 / 4 jaws and various jaw types), only the p/n in line A must be purchased. The chuck must be ordered separately.
- If the cylinder operates a AP / APL chuck (only 3 jaws available and various jaw types), both p/ns in line A and B must be purchased. The chuck must be ordered separately.
- For technical information on the chucks, please see the specific catalogue page. (more information at general catalog turning).
- For the chucks p/ns, please see our price lists or ask a quotation to your nearest SMW-AUTOBLOK office.

HB-D

INCH SERRATION
2 or 3 jaws

HB-C

TONGUE & GROOVE
3 jaws

Stationary chuck, hydraulic Ø 130 - 315 mm

- **Built-in hydraulic cylinder**
- **2 and 3 jaws**

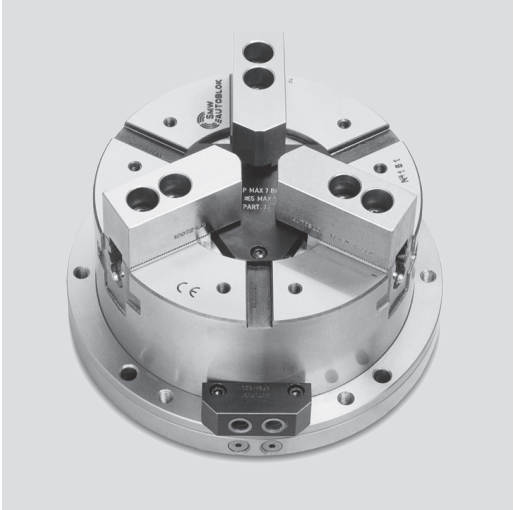

Application/customer benefits

- Stationary hydraulic chuck for self centering clamping of parts on milling machines, machining centers and special machines

HB-D: INCH SERRATED master jaws (1/16" x 90°)
HB-C: TONGUE & GROOVE master jaws (American standard)
HB-M: METRIC SERRATED master jaws (1.5 mm x 60°) **on request from Ø 165**

Technical features

- Stationary chuck consisting of a 2 or 3 jaw self centering chuck with built-in hydraulic cylinder
- Compact design
- Case hardened body to assure highest precision and long chuck life

Standard equipment

Stationary chuck
1 set T-nuts with bolts
(HB-C excluded)
1 set of soft blank top jaws
(HB-C excluded)

Ordering example

Stationary chuck HB-C 250 (3 jaws)
or
Stationary chuck HBL-D2 165 (2 jaws)

Technical data

SMW-AUTOBLOK Type		HB-D 130	HB-D 165 HB-C 165	HB-D 210 HB-C 210	HB-D 250 HB-C 250	HB-D 315 HB-C 315
Radial jaw stroke	mm	3	3.2	4	4.6	5.5
Radial jaw stroke HBL-D2 (2 jaws)*	mm	5.6	6	7.5	8.8	10.5
Piston area	cm^2	63	79	114	167	203
Max. operating pressure	bar	30	30	30	30	30
Gripping force at 25 bar	kN	50	55	85	125	150
Gripping force at 25 bar HBL-D2 (2 jaws)*	kN	28	35	52	75	90
Weight (without top jaws)	kg	9.5	18	30	44	69

* The 2 jaw fixture is available with serrated master jaws (inch or metric) and long stroke only.

JAWS-CATALOG

Request or download: www.smw-autoblok.de

Stationary chuck, hydraulic Ø 130 - 315 mm

- Built-in hydraulic cylinder
- 2 and 3 jaws

HB-D

INCH SERRATION
2 or 3 jaws

HB-C

TONGUE & GROOVE
3 jaws

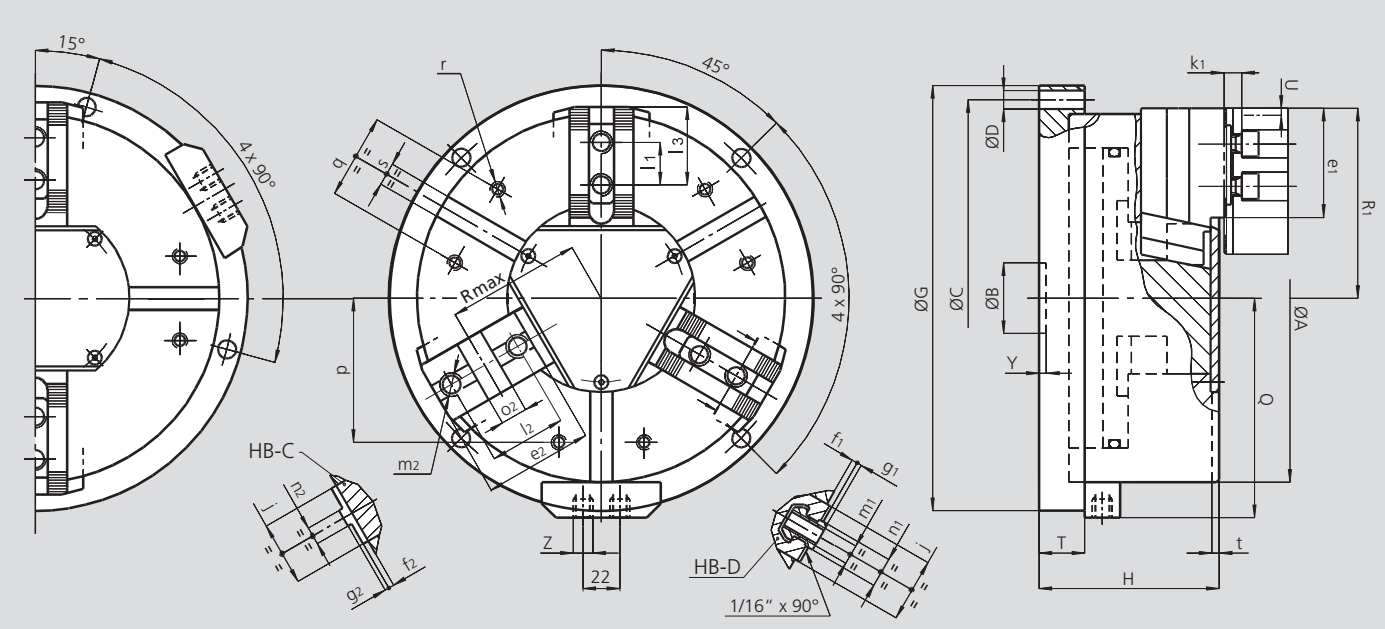

Subject to technical changes.
For more detailed information please ask our customer service.

Common dimensions

SMW-AUTOBLOK Type			HB-D 130	HB-D 165 HB-C 165	HB-D 210 HB-C 210	HB-D 250 HB-C 250	HB-D 315 HB-C 315
	A	mm	135	170	215	260	315
	B	mm	30	30	35	50	50
Fixing holes circle	**C**	mm	155	190	235	280	340
Fixing holes diameter	**D**	mm	9	11	11	13	13
	G	mm	175	210	255	300	360
	H	mm	89	100	117	127	141
	Q	mm	92.5	110	133	155	183
	T	mm	25	27	30	32	32
Radial jaw stroke (3 jaws)	**U**	mm	3	3.2	4	4.6	5.5
Radial jaw stroke HBL-D2 (2 jaws)	**U**	mm	5.6	6	7.5	8.8	10.5
	Y	mm	5	5	5	5	5
Hydraulic connections	**Z**	inch	R1/4"	R1/4"	R1/4"	R1/4"	R1/4"
	j	mm	26	30	36	45	45
	k1	mm	10	10	11	12	12
	p	mm	52	65	80	102	120
	q	mm	30	36	45	60	60
	r	mm	M6	M8	M8	M10	M10
	s H12	mm	12	16	16	16	16
	t	mm	3.5	5	5	5	5

HB-D and HBL-D2 fixtures dimensions

SMW-AUTOBLOK Type			HB-D 130	HB-D 165	HB-D 210	HB-D 250	HB-D 315
	e1	mm	45	48	60	77	99
	f1	mm	3	4	3	4	4
	g1	mm	2.5	2.5	2.5	3.5	3.5
	l1	mm	16	16.5	23	30	30
T-nut position min. / max.	**l3**	mm	23 / 30	24 / 40	33 / 50	43 / 62	43 / 84
	m1	mm	M8	M10	M12	M16	M16
	n1 h8	mm	12	14	17	21	21
Chuck open (3 jaws)	**R1**	mm	71	89	110	134	162
Chuck open HBL-D2 (2 jaws)	**R1**	mm	74	92	114	138.5	168

HB-C fixtures dimensions (available only in 3 jaw chuck version)

SMW-AUTOBLOK Type			HB-C 165	HB-C 210	HB-C 250	HB-C 315
	e2	mm	54	71	77	99
	f2	mm	4	4	4	4
	g2	mm	3	3	3	3
	l2	mm	38	44.4	54	63.5
	m2	mm	M10	M12	M16	M16
	n2 h8	mm	7.94	7.94	12.70	12.70
	o2H7	mm	12.68	12.68	19.03	19.03
Chuck open	**R1**	mm	89	110	134	162
Chuck open	**Rmax**	mm	62	77	94	109

PB-D

INCH SERRATION
2 or 3 jaws

PB-C

TONGUE & GROOVE
3 jaws

Stationary chuck, pneumatic Ø 130 - 315 mm

- Built-in cylinder
- 2 and 3 jaws

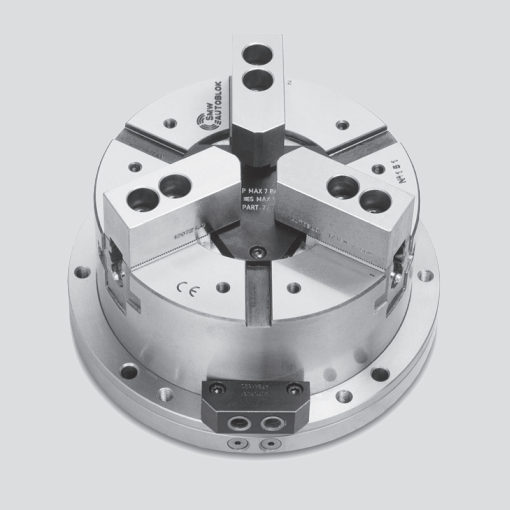

Application/customer benefits

- Self centering chuck used on milling machines, machining centers and special machines

PB-D: INCH SERRATED master jaws (1/16" x 90°)
PB-C: TONGUE & GROOVE master jaws (American standard)
PB-M: METRIC SERRATED master jaws (1.5 mm x 60°) **on request**

Technical features

- Stationary chuck consisting of a 2- or 3-jaw chuck with a built-in pneumatic cylinder
- Compact design
- Case hardened body to assure highest precision and long chuck life

Caution! Filtered and oiled operating air required

Standard equipment

Clamping unit
1 set of soft blank top jaws
(PB-C excluded)

Ordering example

Stationary chuck PB-C 250 (3 jaws)
or
Stationary chuck PBL-D2 165 (2 jaws)

Technical data

SMW-AUTOBLOK Type		PB-D 130	PB-D 165 PB-C 165	PB-D 210 PB-C 210	PB-D 250 PB-C 250	PB-D 315 PB-C 315
Radial jaw stroke	mm	3.2	3.6	4.4	5	6.3
Radial jaw stroke PBL-D2 (2 jaws)*	mm	6	6.8	8.4	9.7	12
Piston area	cm^2	82	143	236	358	548
Max. operating pressure	bar	7	7	7	7	7
Gripping force at 6 bar	kN	14	24	42	64	98
Gripping force at 6 bar PBL-D2 (2 jaws)*	kN	9	16	26	39	60
Weight (without top jaws)	kg	9	17	28	42	63

* The 2 jaw fixture is available with serrated master jaws (inch or metric) and long stroke only.

Option for the PB-D and PB-C chuck

Safety unit that maintains a constant pressure inside the cylinder which maintains a steady clamping force even in case of a drop or lack of line pressure

SAB

Safety unit with double non-return valve, Id. No. 27581620

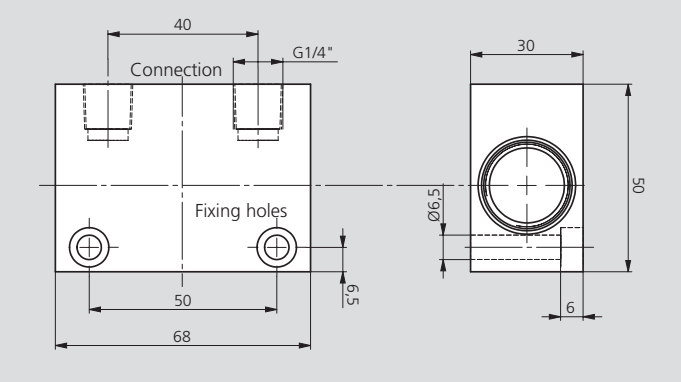

JAWS-CATALOG

Request or download:
www.smw-autoblok.de

Stationary chuck, pneumatic Ø 130 - 315 mm

- Built-in cylinder
- 2 and 3 jaws

PB-D

INCH SERRATION
2 or 3 jaws

PB-C

TONGUE & GROOVE
3 jaws

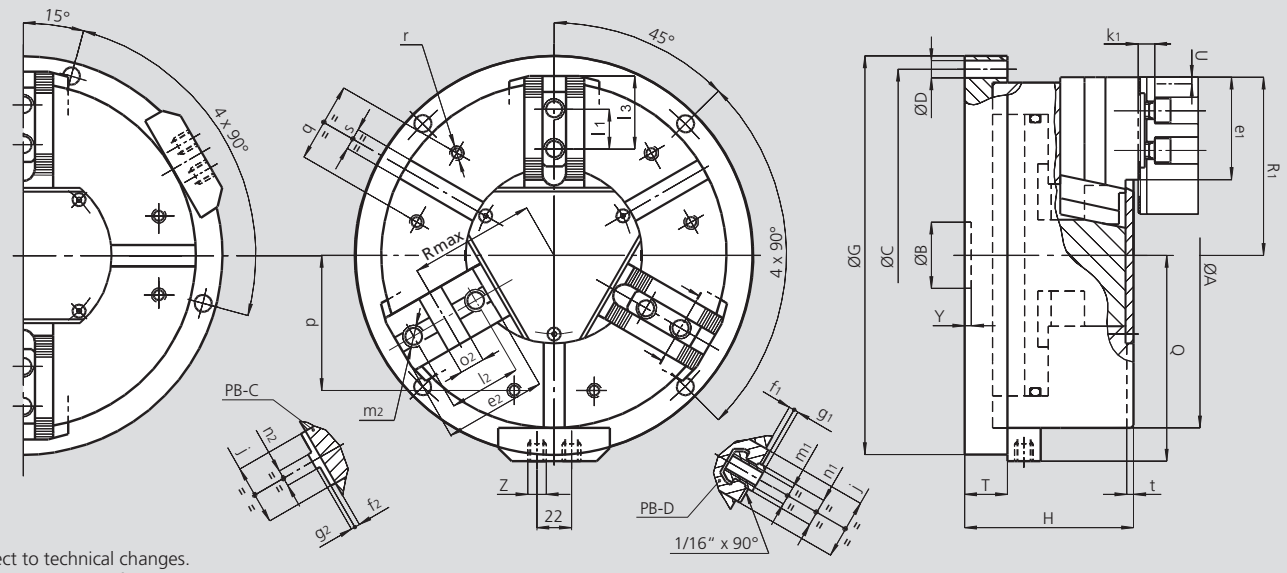

Subject to technical changes.
For more detailed information please ask our customer service.

Common dimensions

SMW-AUTOBLOK Type			PB-D 130	PB-D 165 PB-C 165	PB-D 210 PB-C 210	PB-D 250 PB-C 250	PB-D 315 PB-C 315
	A	mm	135	170	215	260	315
	B	mm	30	30	35	50	50
Fixing holes circle	**C**	mm	155	190	235	280	340
Fixing holes diameter	**D**	mm	9	11	11	13	13
	G	mm	175	210	255	300	360
	H	mm	89	100	117	127	141
	Q	mm	93	110	133	155	183
	T	mm	25	27	30	32	32
Radial jaw stroke (3 jaws)	**U**	mm	3.2	3.6	4.4	5	6.3
Radial jaw stroke PBL-D2 (2 jaws)	**U**	mm	6	6.8	8.4	9.7	12
	Y	mm	5	5	5	5	5
Pneumatic connections	**Z**	inch	R1/4"	R1/4"	R1/4"	R1/4"	R1/4"
	j	mm	26	30	36	45	45
	k1	mm	10	10	11	12	12
	p	mm	52	65	80	102	120
	q	mm	30	36	45	60	60
	r	mm	M6	M8	M8	M10	M10
	s H12	mm	12	16	16	16	16
	t	mm	5	5	5	5	5

PB-D and PBL-D2 fixtures dimensions

SMW-AUTOBLOK Type			PB-D 130	PB-D 165	PB-D 210	PB-D 250	PB-D 315
	e1	mm	37	48	60	77	99
	f1	mm	3	4	3	4	4
	g1	mm	2.5	2.5	2.5	3.5	3.5
	l1	mm	16	16.5	23	30	30
T-nut position min. / max.	**l3**	mm	23 / 30	24 / 40	33 / 50	43 / 62	43 / 84
	m1	mm	M8	M10	M12	M16	M16
	n1 h8	mm	12	14	17	21	21
Chuck open (3 jaws)	**R1**	mm	71	89	110	134	162
Chuck open PBL-D2 (2 jaws)	**R1**	mm	74	92	114	138.5	168

PB-C fixtures dimensions (available in 3-jaw chuck version only)

SMW-AUTOBLOK Type			PB-C 130	PB-C 165	PB-C 210	PB-C 250	PB-C 315
	e2	mm	-	54	71	77	99
	f2	mm	-	4	4	4	4
	g2	mm	-	3	3	3	3
	l2	mm	-	38	44.4	54	63.5
	m2	mm	-	M10	M12	M16	M16
	n2 h8	mm	-	7.94	7.94	12.70	12.70
	o2 H7	mm	-	12.68	12.68	19.03	19.03
Chuck open	**R1**	mm	-	89	110	134	162
Chuck open	**Rmax**	mm	-	62	77	94	109

STP

INCH SERRATION
3 jaws

Stationary chuck, pneumatic Ø 125 - 280 mm

- **Built-in cylinder**
- **With through-hole**

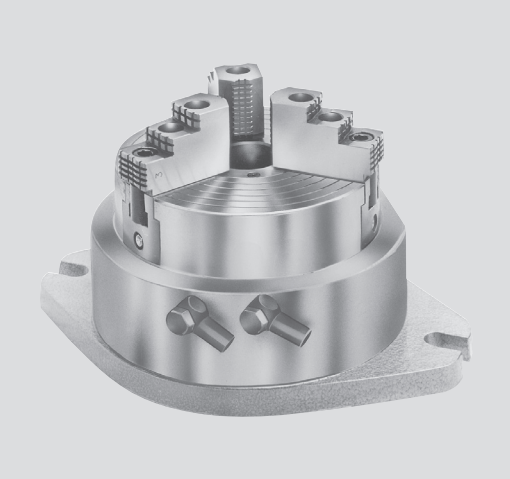

Application/customer benefits

- Self centering stationary chuck used on milling machines / machining centers / special machines
- Low profile - large open center
- Easy installation on the machine

Technical features

- Stationary chuck consisting of a 3 jaw chuck with a built-in pneumatic cylinder
- Operating pressure from 2 to 10 bar

Caution! Filtered and oiled, operating air required

Standard equipment

Stationary chuck
1 set T-nuts with bolts
1 set of soft blank top jaws
2 elbow fittings G1/4"
(G1/8" on STP 125)

Ordering example

Stationary chuck STP 280 (3 jaws)

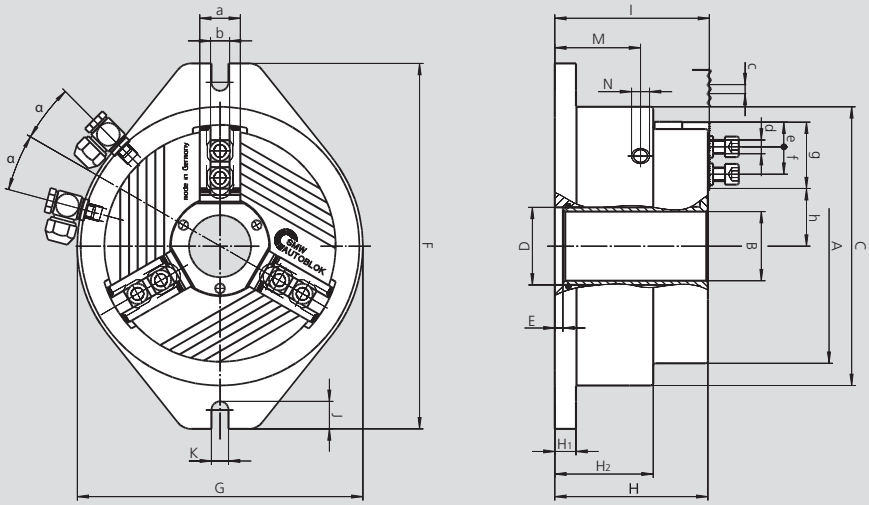

Subject to technical changes.
For more detailed information please ask our customer service.

Technical data

SMW-AUTOBLOK Type Id. No.			STP 125 013904	STP 160 013905	STP 240 053273	STP 280 052810
	A	mm	136	171	240	284
	B	mm	26	38	78	92
	C	mm	156	201	250	316
	D H6	mm	34	46	86	102
	E	mm	8	7.5	7	6
	F	mm	220	275	320	400
	G	mm	160	206	250	316
	H	mm	102.5	130	134	155.5
	H1	mm	14.5	19	18.5	23.5
	H2	mm	66	83	86	97.5
	I	mm	104	132	135.5	157
	J	mm	22	24	24	30
	K	mm	13	15	15	18
	M	mm	57	72	75	86
Pneumatic connections	**N**	inch	G 1/8"	G 1/4"	G 1/4"	G 1/4"
	a	mm	25	30	36	44
	b f7	mm	12	14	17	21
Serration	**c**	inch	1/16" x 90°	1/16" x 90°	1/16" x 90°	1/16" x 90°
Bolt ISO 4762 12.9	**d**	mm	M8 x 30	M10 x 35	M12 x 35	M16 x 40
Min.	**e**	mm	4	6	8	12
T-nuts distance min. / max.	**f**	mm	17/25	17/31	22/41.5	25/51
Serration length	**g**	mm	40	50	59	75
Min. / max.	**h**	mm	25.9 / 28.9	24.9 / 37	57.7 / 61.9	70 / 65
	α	deg.	15	15	15	7.5

Radial jaw stroke	mm	3	4.1	4.2	5
Operating pressure min. / max.	bar	2 / 10	2 / 10	2 / 10	2 / 10
Piston area	cm^2	129	206	290	532
Gripping force at 6 bar	kN	20	35	60	95
Air consumption at 6 bar	l	1	2.4	5.5	6.6
Weight (without top jaws)	kg	19	21	40	56

STP

INCH SERRATION
3 jaws

MHB-D
Hardened reversible top jaws

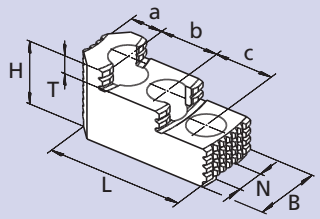

Chuck Type	STP 125	STP 160	STP 240	STP 280
Jaw type	MHB-D 125	MHB-D 160	MHB-D 200	MHB-D 251
Id. No. (set)	12081306	12081636	12082036	12083036
B	30	34	40	5
H	34	39	45	56
L	58	65	82	105
T	8.5	10	10.5	13.5
N	12	14	17	21
Serration	1/16" x 90°	1/16" x 90°	1/16" x 90°	1/16" x 90°
a	13	18	19	26
b	16	16	23	30
c	16	16	23	30
kg / set	0.6	0.9	1.7	2.85

AWB-D
Soft top jaws

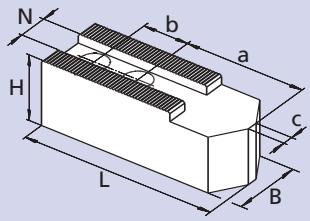

Chuck Type	STP 125	STP 160	STP 240	STP 280
Jaw type	AWB-D 125	AWB-D 165	AWB-D 200	AWB-D 250
Id. No. (set)	12071300*	035954	081616	081618
B	30	40	40	50
H	30	40	40	50
L	60	80	90	120
N	12	14	17	21
Serration	1/16" x 90°	1/16" x 90°	1/16" x 90°	1/16" x 90°
a	29	43	53	70
b	16	22	22	28
kg / set	0.9	2.0	2.7	5.1

* Id. No. is per piece. 1 set = 3 pieces.

NST
T-nuts

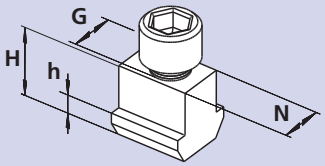

Chuck Type	STP 125	STP 160	STP 240	STP 280
T-nut type	NST 12	NST 14	NST 17-4	NST 21-5
Id. No.	089810*	013863*	013864*	033429*
N	12	14	17	21
H	21.5	26.5	26.5	30
h	7.5	9.5	9.5	11
G	M8	M10	M12	M16
Bolt ISO 4762 12.9	M8 x 30	M10 x 35	M12 x 35	M16 x 40
Tighten torque	30	50	70	150

* Id. No. is per piece. 1 set = 6 pieces.

M2-PB

Multiple fixture
with 2 chucks

Multiple chucks on fixture, pneumatic
Ø 130 - 315 mm

■ 2 or 3 jaws (PB-D / PB-M)
■ 3 jaws (PB-C)

Application/customer benefits

- For milling machines / machining centers to clamp and machine multiple pieces

M2-PB: Multiple fixture with 2 chucks type PB-D, PB-C oder PB-M

Technical features

(more features on chucks see general catalog page 424)

- The basic model needs separate circuits to operate the chucks singularly
  1st option: SAB safety unit with non-return valve for every chuck.
  2nd option: single non-return valve to operate all chucks simultaneously, with coupling unit to repressurize the fixtures after the storage of the pallets.
  3rd option: every chuck can be equipped with a spring loaded clamping unit (internal or external clamping), to hold the workpieces during the pallet transfer.

Standard equipment

Multiple chuck on fixture
1 set of soft blank top jaws and
1 set T-nuts with bolts
(PB-C excluded)

Ordering example

Multiple chuck on fixture M2-PBC 250
(3 jaws)

Technical data

SMW-AUTOBLOK Type		M2-PB 130	M2-PB 165	M2-PB 210	M2-PB 250	M2-PB 315
Chucks radial jaw stroke	mm	3.2	3.6	4.4	5	6.3
Chucks radial jaw stroke PBL-D2 (2 jaws)*	mm	6	6.8	8.4	9.7	12
Actuating cylinder piston area	cm²	82	143	236	358	548
Max. operating pressure	bar	7	7	7	7	7
Chucks gripping force at 6 bar	kN	14	24	42	64	98
Chucks gripping force at 6 bar PBL-D2 (2 jaws)*	kN	9	16	26	39	60
Weight (without top jaws)	kg	29.5	49	83	121	172

* The 2 jaw fixture is available with serrated master jaws (inch or metric) and long stroke only.

Option for the M2-PB fixture

Safety unit that maintains a constant pressure inside the cylinder which maintains a steady clamping force even in case of a drop or lack of line pressure.

SAB

Safety unit with double non-return valve
Id. No. 27581620

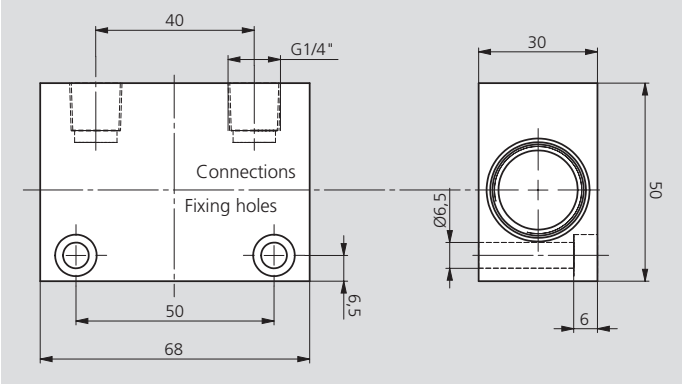

JAWS-CATALOG

Request or download:
www.smw-autoblok.de

Multiple chucks on fixture, pneumatic
Ø 130 - 315 mm

- 2 or 3 jaws (PB-D / PB-M)
- 3 jaws (PB-C)

M2-PB

Multiple fixture with 2 chucks

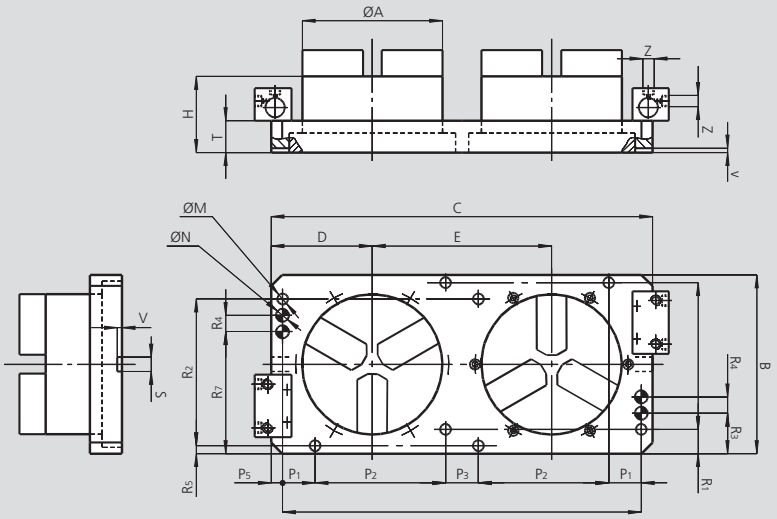

Subject to technical changes.
For more detailed information please ask our customer service.

M2-PB dimensions

SMW-AUTOBLOK Type			M2-PB 130	M2-PB 165	M2-PB 210	M2-PB 250	M2-PB 315
Chuck diameter	**A**	mm	135	170	215	260	315
	B	mm	198	224	274	324	374
	C	mm	400	460	585	660	780
	D	mm	107.5	131	155	175	205
	E	mm	185	223	275	310	370
	H	mm	89	100	117	127	141
Fixing holes diameter	**M**	mm	17	17	17	17	17
Reference pin holes	**N** H8	mm	20	20	20	20	20
	P1	mm	-	50	50	50	50
	P2	mm	150	150	200	250	300
	P3	mm	50	50	50	-	-
	P5	mm	25	17.5	17.5	30	40
	P6	mm	350	460	550	600	700
	R1	mm	24	37	37	37	37
	R2	mm	150	175	225	275	325
	R3	mm	24	62	62	62	62
	R4	mm	-	25	25	25	25
	R5	mm	24	12	12	12	12
	R7	mm	174	137	187	237	287
	S	mm	14	18	18	18	18
	T	mm	39	44	49	54	54
	V	mm	6	6	6	6	6
Pneumatic connections	**Z**	inch	R1/4"	R1/4"	R1/4"	R1/4"	R1/4"

PBI-D

INCH SERRATION
2 or 3 jaws

PBI-C

TONGUE & GROOVE
3 jaws

Pneumatic chuck for indexing tables Ø 165 - 315 mm

- Built-in cylinder
- 2 and 3 jaws

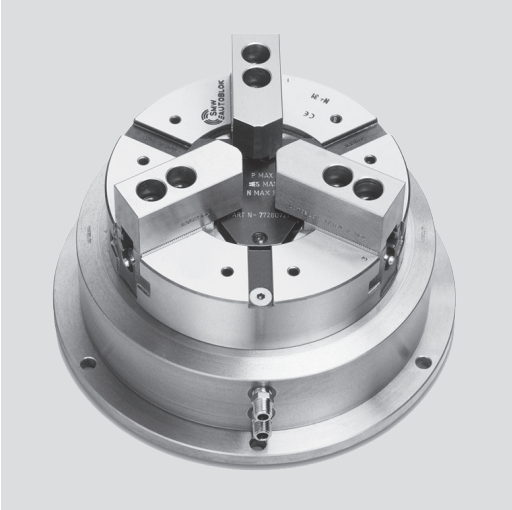

Application/customer benefits

- Self centering rotating chuck with a pneumatic manifold used on indexing tables, not designed for constant rotation on turning machines

PBI-D: INCH SERRATED master jaws (1/16" x 90°)
PBI-C: TONGUE & GROOVE master jaws
PBI-M: METRIC SERRATED master jaws (1.5 mm x 60°) **on request**

Technical features

- 2- / 3-jaw chuck with a built-in pneumatic cylinder
- Manifold for air supply
- Case hardened body to assure highest precision and long chuck life

Important! Due to the friction between fixed manifold and rotating central body, the indexing table must provide a higher rotation torque than the one shown in the schedule below!

Standard equipment

Chuck unit
1 set of soft blank top jaws
(PBI-C excluded)
1 set T-nuts with bolts
(PBI-C excluded)

Ordering example

3-jaw chuck PBI-C 250
or
2-jaw chuck PBI-D 165

Technical data

SMW-AUTOBLOK Type		PBI-D 165 PBI-C 165	PBI-D 210 PBI-C 210	PBI-D 250 PBI-C 250	PBI-D 315 PBI-C 315
Radial jaw stroke	mm	3.6	4.4	5	6.3
Radial jaw stroke PBIL-D2 (2 jaws)*	mm	6.8	8.4	9.7	12
Piston area	cm²	143	236	358	548
Max. operating pressure	bar	7	7	7	7
Gripping force at 6 bar	kN	24	42	64	98
Gripping force at 6 bar PBIL-D2 (2 jaws)*	kN	16	26	39	60
Torque Md	Nm	40	60	85	120
Weight (without top jaws)	kg	23	38	56	82

* The 2 jaw fixture is available with serrated master jaws (inch or metric) and long stroke only.

JAWS-CATALOG

Request or download: www.smw-autoblok.de

Pneumatic chuck for indexing tables Ø 165 - 315 mm

- Built-in cylinder
- 2 and 3 jaws

PBI-D
INCH SERRATION
2 or 3 jaws

PBI-C
TONGUE & GROOVE
3 jaws

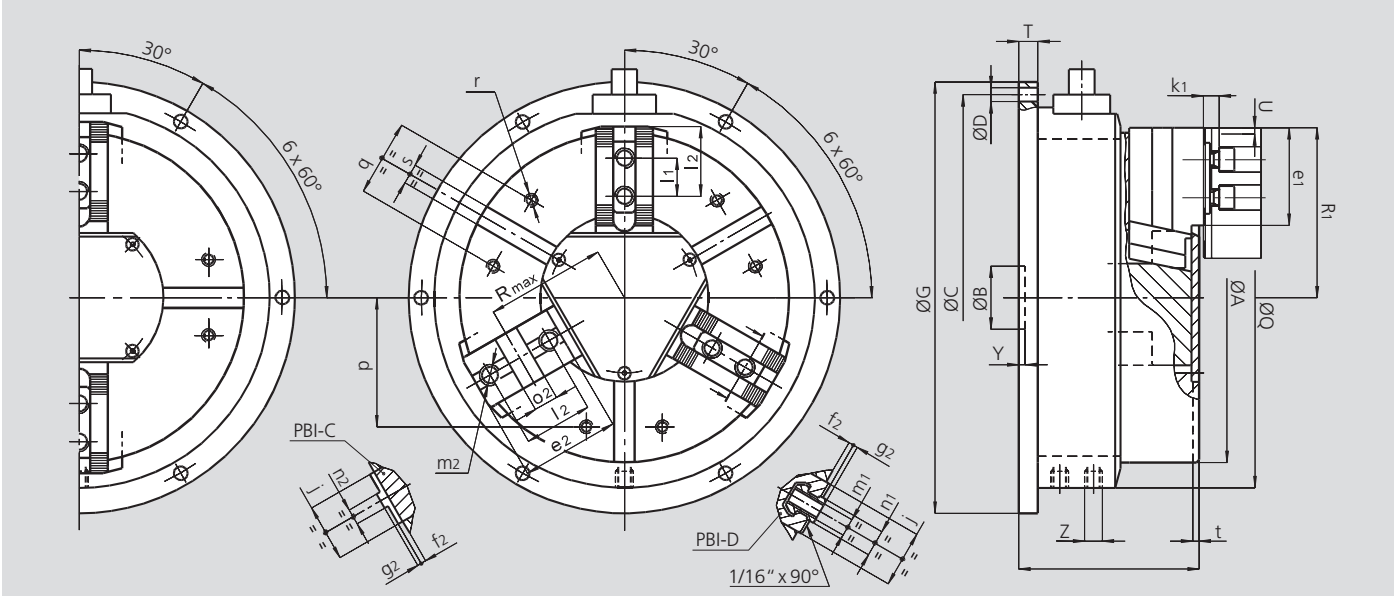

Subject to technical changes.
For more detailed information please ask our customer service.

Common dimensions

SMW-AUTOBLOK Type			PBI-D 165 PBI-C 165	PBI-D 210 PBI-C 210	PBI-D 250 PBI-C 250	PBI-D 315 PBI-C 315
	A	mm	170	215	260	315
	B	mm	30	35	50	50
Fixing holes circle	**C**	mm	225	280	320	390
Fixing holes diameter	**D**	mm	9	11	11	13
	G	mm	240	300	340	415
	H	mm	114	132	140	145
	Q	mm	210	260	300	365
	T	mm	10	12	14	14
Radial jaw stroke (3 jaws)	**U**	mm	3.6	4.4	5	6.3
Radial jaw stroke PBIL-D2 (2 jaws)	**U**	mm	6.8	8.4	9.7	12
	Y	mm	5	5	5	5
Pneumatic connections	**Z**	inch	R1/4"	R1/4"	R1/4"	R1/4"
	j	mm	30	36	45	45
	k1	mm	10	11	12	12
	p	mm	65	80	102	120
	q	mm	36	45	60	60
	r	mm	M8	M8	M10	M10
	s H12	mm	16	16	16	16
	t	mm	5	5	5	5

PBI-D and PBIL-D2 fixtures dimensions

SMW-AUTOBLOK Type			PBI-D 165	PBI-D 210	PBI-D 250	PBI-D 315
	e1	mm	48	60	77	99
	f1	mm	4	3	4	4
	g1	mm	2.5	2.5	3.5	3.5
	l1	mm	16.5	23	30	30
T-nut position min. / max.	**l3**	mm	24 / 40	33 / 50	43 / 62	43 / 84
	m1	mm	M10	M12	M16	M16
	n1 h8	mm	14	17	21	21
Chuck open (3 jaws)	**R1**	mm	89	110	134	162
Chuck open PBIL-D2 (2 jaws)	**R1**	mm	92	114	138.5	168

PBI-C fixtures dimensions (available only in 3 jaw chuck version)

SMW-AUTOBLOK Type			PBI-C 165	PBI-C 210	PBI-C 250	PBI-C 315
	e2	mm	54	71	77	99
	f2	mm	4	4	4	4
	g2	mm	3	3	3	3
	l2	mm	38	44.4	54	63.5
	m2	mm	M10	M12	M16	M16
	n2 h8	mm	7.94	7.94	12.70	12.70
	o2 H7	mm	12.68	12.68	19.03	19.03
Chuck open	**R1**	mm	89	110	134	162
Chuck open	**Rmax**	mm	62	77	94	109

Centco4

INCH
SERRATION

4-jaw chuck

- 2+2 self centering
- Independent self centering clamping in 2 axis
- Centrifugal force compensation

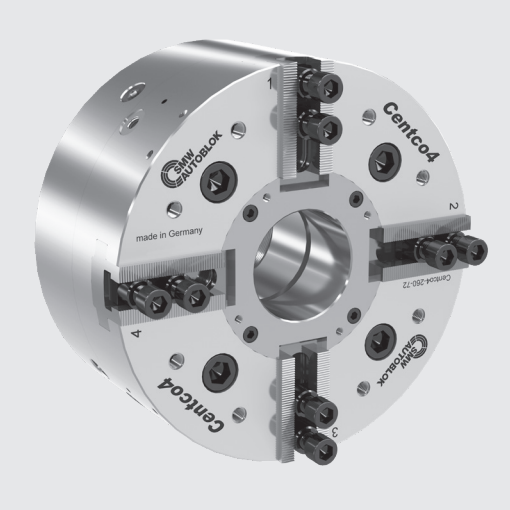

Application/customer benefits

- Independent self centering clamping in 2 axis via 1 central actuating mechanism
- Mechanical centering of the workpiece
- Standard cylinder can be used for actuating
- Clamping of every workpiece geometry possible
- Less workpiece deformation compared to 3-jaw chucks
- Long lifetime due to case hardened parts
- Large range of standard top jaws
- Suitable für OD and ID clamping

Technical features

- Centrifugal force compensation
- Optimized lubrication system
- Large through-hole
- Jaw interface 1/16“ x 90°

Standard equipment

4-jaw chuck,
8 pieces T-nuts and bolts

Ordering example

4-jaw chuck
Centco4-260-7-Z-220

Function / Application examples

2+2 self centering and compensating clamping*

In the beginning the jaw pairs **Z1** + **Z2** only apply a force that is necessary to center the workpiece. Only if both jaw pairs **Z1** and **Z2** are in contact with the workpiece, the grip force necessary for machining is applied.

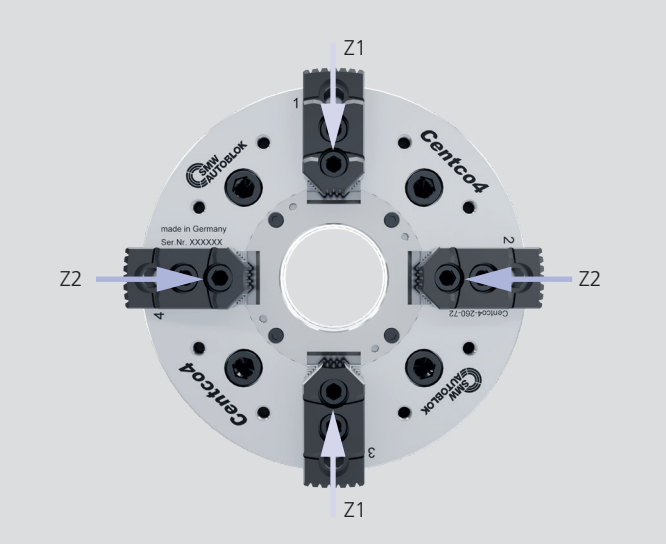

2+2 self centering clamping of round or thinwalled workpieces

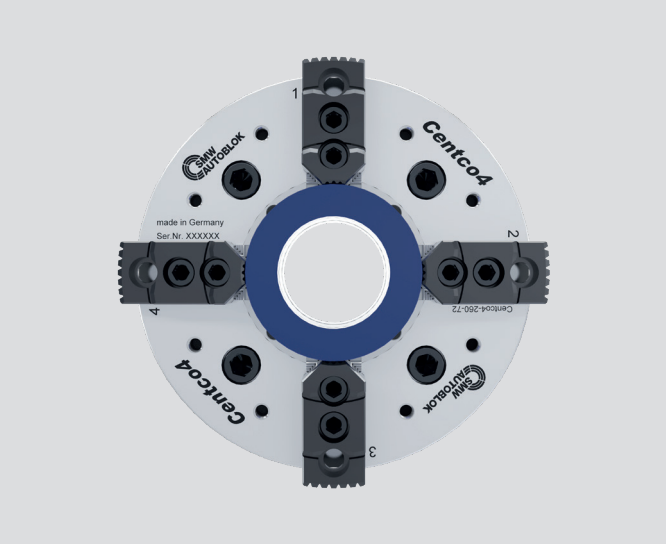

2+2 self centering and compensating clamping of rectangular or square workpieces

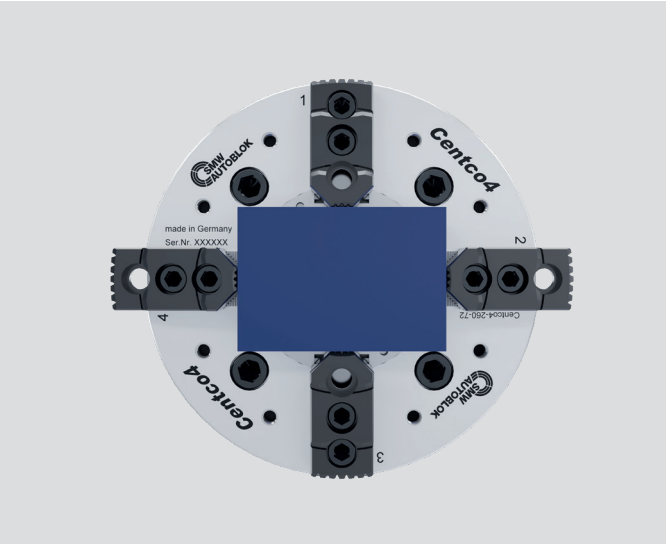

2+2 self centering and compensating clamping of unshaped workpieces

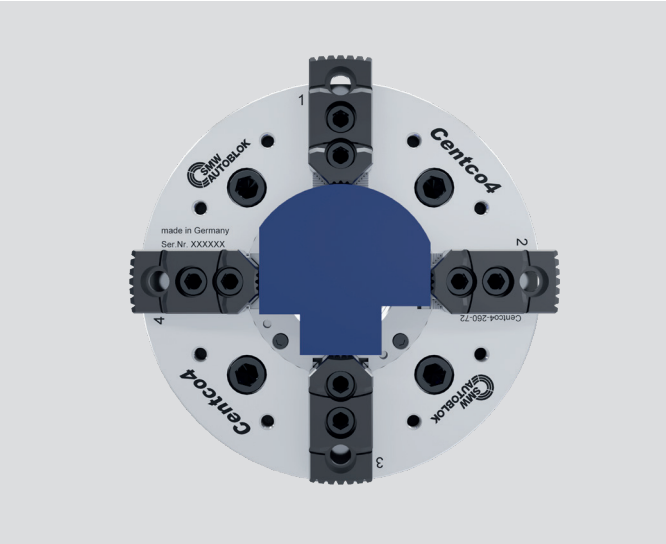

* **Z1**: Self centering clamping axis 1 / **Z2**: self centering clamping axis 2.
Z1 is compensating to **Z2**.

4-jaw chuck

- 2+2 self centering
- Independent self centering clamping in 2 axis
- Centrifugal force compensation

Centco4

INCH
SERRATION

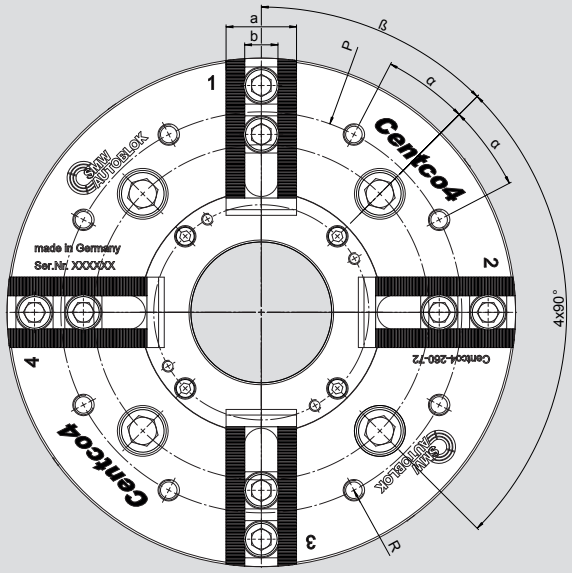

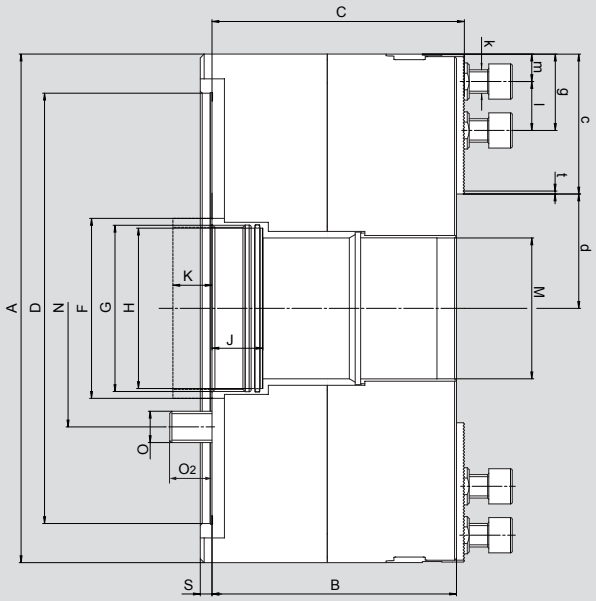

Subject to technical changes.
For more detailed information please ask our customer service.

SMW-AUTOBLOK Type		Centco4 210-52	Centco4 260-72	Centco4 315-92	Centco4 400-112	Centco4 400-112	Centco4 500-155	Centco4 630-165
Mounting		**Z170**	**Z220**	**Z300**	**Z300**	**Z380**	**Z380**	**Z380**
Id. No.		**163120**	**162780**	**163140**	**163175**	**163160**	**163580**	**163770**
Outside diameter	**A**	210	260	315	400	400	500	630
	B	108.5	125	134	146	146	156	156
	C	110.5	129	138	150	150	159	159
Diameter Mounting	**D H6**	170	220	300	300	380	380	380
	F	68	92	115	142	142	178	188
Piston thread / depth	**G**	M60 x 2 / 20	M85 x 2 / 20	M105 x 2 / 20	M125 x 2 / 28	M125 x 2 / 28	M165 x 2 / 28	M175 x 2 / 28
Centering draw tube	**H H7**	57	82	102	122	122	162	172
Face contact draw tube	**J**	30	30	30	38	38	38	38
Piston stroke	**K**	17	20	23	25	25	30.5	30.5
Through-hole	**M H7**	52	72	92	112	112	155	165
Bolt circle	**N**	133.4	171.4	235.0	235.0	330.2	330.2	330.2
Fixing bolt	**O**	M12	M16	M20	M20	M24	M24	M24
	O2	19.5	22	29	25	29	34.5	34.5
	P	170	205	260	280	280	410 / 280	585 / 420 / 300
Thread / depth	**R**	M8 / 12	M10 / 21	M10 / 21	M10 / 21	M10 / 21	M10 / 15	2xM16/24-M12/18
	S	5	6	6	6	6	6	6
Base jaw width	**a**	35	36	40	45	45	60	60
Groove width	**b H7**	14	17	17	21	21	25.5	25.5
	c	60	71.5	91	117.5	117.5	142.5	202.5
Max.	**d**	45	58.5	66.5	82.5	82.5	107.5	112.5
Max. / min.	**g**	47 / 22	58 / 25	78 / 25	104 / 35	104 / 35	115 / 44	175 / 44
Bolt ISO 4762 12.9	**k**	M10	M12	M12	M16	M16	M20	M20
Spacing min.	**l**	16	19	19	25	25	30	30
Spacing min.	**m**	6	6	6	10	10	14	14
Inch serration	**t**	1/16" x 90°	1/16" x 90°	1/16" x 90°	1/16" x 90°	1/16" x 90°	1/16" x 90°	1/16" x 90°
	α°	17.5	17.5	17.5	17.5	17.5	15	15
	β°	45	45	45	45	45	45	45
Stroke per jaw	mm	4.5	5.25	6	6.5	6.5	8	8
Equalising per jaw	mm	3.4	4	5	5	5	6	6
Max. actuating force	kN	40	50	60	85	85	95	95
Max. total gripping force	kN	100	125	150	210	210	230	230
Max. speed	min-1	5000	4500	4000	3500	3500	2600	1800
Weight (without jaws)	kg	24.5	42	66	121.5	121.5	200	330
Moment of inertia	kgm²	0.15	0.4	0.92	2.7	2.7	7.12	18.1
Recommended actuating cylinder		**SIN-S 100 / 125**	**SIN-S 125 / 150**	**SIN-S 125 / 150**	**SIN-S 150 / 175**	**SIN-S 150 / 175**	**SIN-S 150 / 175**	**SIN-S 150 / 175**
Recommended actuating cylinder		**VNK-T2 130-52**	**VNK-T2 170-77**	**VNK-T2 225-95**	**VNK-T2 250-110**	**VNK-T2 250-110**	**VSG 450-165-110**	**VSG 450-165-110**

Centco4

INCH SERRATION

■ Jaws*

MHB-D (INCH SERRATION)

Hard, reversible stepped top jaws

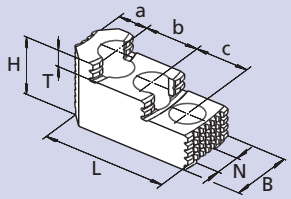

Centco4	210-52	260-72	315-92	400-112	500-115	630-165
Jaw type	MHB-D 160	MHB-D 200	MHB-D 200	MHB-D 251	MHB-D 500	MHB-D 500
Id. No.	12081638	12082038	12082038	12083038	12084548	12084548
Serration	1/16" x 90°	1/16" x 90°	1/16" x 90°	1/16" x 90°	3/32" x 90°	3/32" x 90°
B	34	40	40	45	60	60
H	39	45	45	56	75	75
L	65.2	82	82	106.2	140.8	140.8
T	10	10.5	10.5	13.5	19	19
N	14	17	17	21	25.5	25.5
a	18	19	19	26	38	38
b	16.5	23	23	30	38	38
c	16.5	23	23	30	38	38
kg / set	0.9	2.3	2.3	2.9	9.5	9.5

MWB-D (INCH SERRATION)

Soft top jaws

Tall version

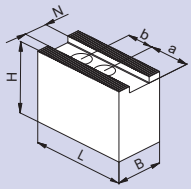

Centco4	210-52	260-72	315-92	400-112	500-115	630-165
Jaw type	MWB-D 165	MWB-D 200	MWB-D 200	MWB-D 250	MWB-D 400	MWB-D 400
Id. No.	5318607	5318837	5318837	5319680	5319831	5319831
Serration	1/16" x 90°	1/16" x 90°	1/16" x 90°	1/16" x 90°	3/32" x 90°	3/32" x 90°
B	35	40	40	50	60	60
H	60	60	60	80	90	90
L	70	90	90	120	170	170
N	14	17	17	21	25.5	25.5
a	33	43	43	62	90	90
b	16.5	22	22	28	35	35
kg / set	2.8	4.1	4.1	9.2	21.6	21.6

AWB-D (INCH SERRATION)

Soft top jaws

Low / pointed version

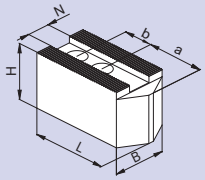

Centco4	210-52	260-72	315-92	400-112	500-115	630-165
Jaw type	AWB-D 165	AWB-D 200	AWB-D 200	AWB-D 250	AWB-D 400	AWB-D 400
Id. No.	5318608	5318838	5318838	5319681	5319834	5319834
Serration	1/16" x 90°	1/16" x 90°	1/16" x 90°	1/16" x 90°	3/32" x 90°	3/32" x 90°
B	40	40	40	50	60	60
H	40	40	40	50	60	60
L	100	110	110	120	170	170
N	14	17	17	21	25.5	25.5
a	43	53	53	70	115	115
b	22	22	22	28	35	35
kg / set	2.4	2.7	2.7	5.4	14.5	14.5

SBS-D (INCH SERRATION)

Soft pie jaws

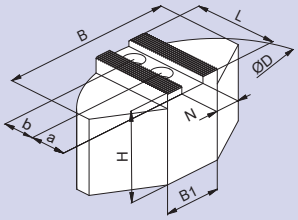

Centco4	210-52	260-72	315-92	400-112	500-115	630-165
Jaw type	SBS-D 165	SBS-D 200	SBS-D 200	SBS-D 200	SBS-D 400	SBS-D 400
Id. No.	5318610	5318839	5318839	5319684	5319832	5319832
Serration	1/16" x 90°	1/16" x 90°	1/16" x 90°	1/16" x 90°	3/32" x 90°	3/32" x 90°
B	120	140	140	180	330	330
B1	40	64	64	50	190	190
D	165	200	200	250	440	440
H	60	60	60	70	85	85
L	60	70	70	80	155	155
N	14	17	17	21	25.5	25.5
a	25	35	35	30	85	85
b	22	22	22	29	35	35
kg / set	7.1	10.3	10.3	18.3	71	71

SBA-D (INCH SERRATION)

Soft pie jaws aluminium light version

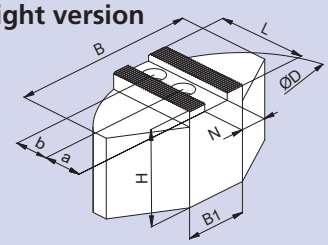

Centco4	210-52	260-72	315-92	400-112	500-115	630-165
Jaw type	SBA-D 165	SBA-D 200	SBA-D 200	SBA-D 250	SBA-D 400	SBA-D 400
Id. No.	5318609	5318840	5318840	5319685	5319833	5319833
Serration	1/16" x 90°	1/16" x 90°	1/16" x 90°	1/16" x 90°	3/32" x 90°	3/32" x 90°
B	110	120	120	160	330	330
B1	40	40	40	50	190	190
D	165	200	200	250	440	440
H	58	58	58	78	98	98
L	58	72.5	72.5	87.5	160	160
N	14	17	17	21	25.5	25.5
a	25	35	35	40	85	85
b	20	22	22	29	35	35
kg / set	2.4	3.7	3.7	7.2	32	32

* SMW-AUTOBLOK is recommending not to clamp any diameters, that are larger than the chuck O.D.

NST
T-nuts suitable for *Centco4*

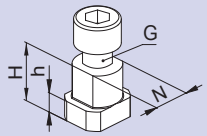

Centco4		210-52	260-72	315-92	400-112	500-155	630-165
T-nut type		NST14	NST17	NST17	NST21	NST25	NST25
Id. No.		163134	016021	016021	014788	014812	014812
	N	14	17	17	21	25.5	25.5
	H	20	23	23	27	29	29
	h	7.5	9	9	10	11	11
Cyl.-screw ISO 4762-12.9	G	M10 x 25	M12 x 30	M12 x 30	M16 x 35	M20 x 40	M20 x 40
Torque Md max. (Nm)		50	70	70	150	250	250

cover for through-hole

Centco4	210-52	260-72	315-92	400-112	500-155	630-165
Id. No.	163135	163136	163137	163138	163584	163585

Important for maintenance and safe operation, to be ordered with the chuck

Grease K67

Special grease for manual and power chucks

Cartridge 14 Oz. (DIN 1284)
Grease content 500 g
Id. No. 10731223

Can 1000 g
Id. No. 10731224

- High adhesion
- High resistance against coolant
- High load bearing capacity
- Low friction coefficient
- High gripping force
- Avoids tribocorrosion

Grease gun

Grease gun (DIN 1283) for cartridges 14 Oz. (DIN 1284)
■ Also refillable from grease can 1000 g

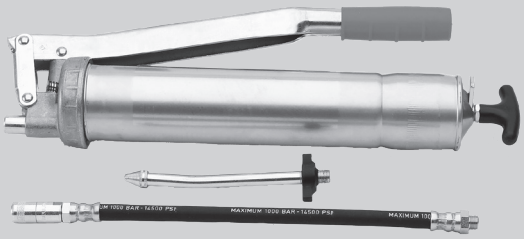

Lubrication set Id. No. 083726
Supply range
- Grease gun
- 1 Adapter flexible for high pressure grease nipple
- 1 Adapter for cone grease nipple

Subject to technical changes.
For more detailed information please ask our customer service.

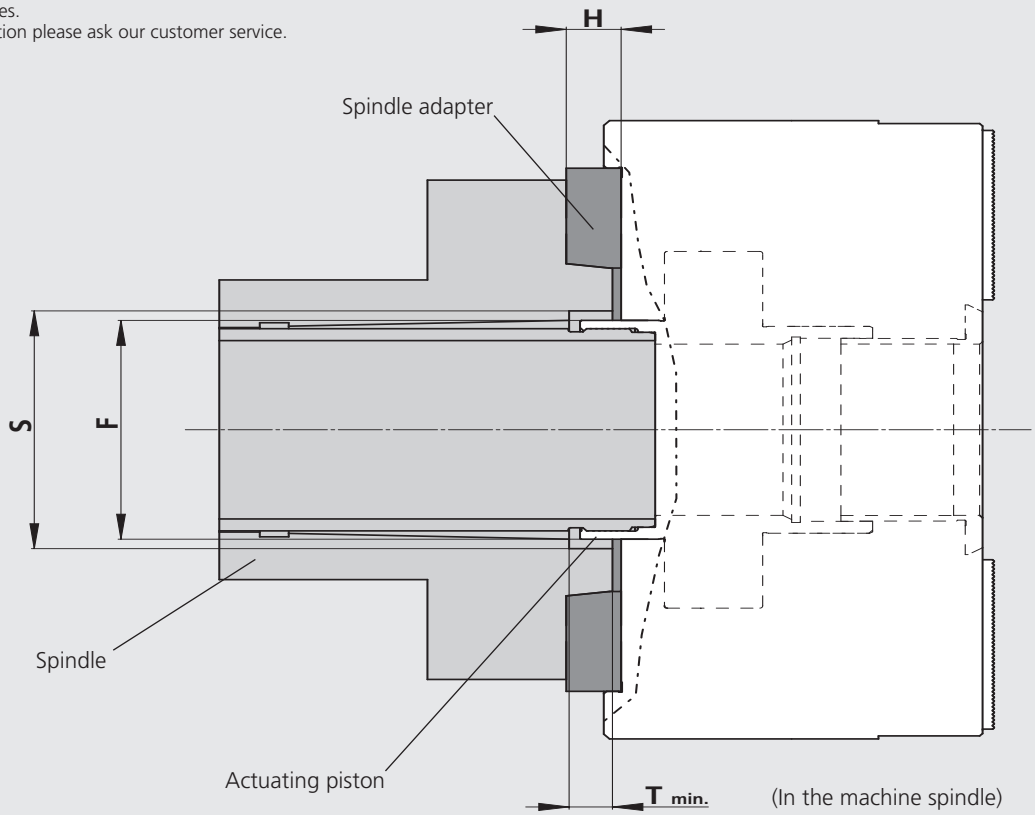

Chuck type *Centco4*	Spindle mounting	Actuating piston dia. F (mm)	Clearance dia. S (mm)	Clearance - depth T min. (mm)*	Id. No. Spindle adapter	Spindle adapter height H (mm)
210-52-Z170	A06	68	> 68	14	24162000	17
			< 68	-	24162110	40
260-72-Z220	A06	92	< 92	-	24162532	50
	A08	92	> 92	17	24182500	19
			> 92	-	24182520	43
315-92-Z300	A08	115	> 115	10	24183100	30
			< 115	-	24184000	40
	A11	115	> 115	20	24113100	21
			> 115	11	24113110	30
			< 115	-	2704390	44
400-112-Z300	A11	142	< 142	-	2704390	44
400-112-Z380	A11	142	> 142	2	24115000	40
			< 142	-	2704391	44
	A15	142	> 142	23	24125000	23
			< 142	-	2704392	47
500-155-Z380	A11	178	> 178	8	24115000	40
			< 178	-	2704606	50
	A15	178	> 178	26.5	24125000	23
			< 178	-	273765	50
630-165-Z380	A11	188	> 188	8	24115000	40
			< 188	-	2704606	50
	A15	188	> 188	26.5	24125000	23
			< 188	-	273765	50

* to clear the axial stroke of the actuating piston (see „technical details piston stroke“ K)

Notes

SMW-AUTOBLOK Catalogs

The following SMW-AUTOBLOK catalogs are available:

- Turning catalog
- Stationary Workholding catalog
- Jaws catalog
- Grinding catalog
- OCTG catalog
- Steady Rests brochure
- Product overview

Ask for our complete catalog Turning:

Download:
www.smw-autoblok.de

SMW-AUTOBLOK
Service benefits

- **Worldwide**
  Service and support on site
- **Rapid task force**
  Global reach in less time,
  technical problem-solving skills
- **Repair**
  Quick Repair, express service on request
- **Original spare parts**
  Relevant spare parts are available from stock
- **Training**
  Individual training courses
- **Run-off**
  Run-off and support at the point of use
- **Maintenance**
  Scheduled maintenance, at SMW-AUTOBLOK or at the customer
- **Warranty**
  Warranty of 24 month on request

zertifiziert
DIN EN ISO 9001
certified


SMW
AUTOBLOK