APL-C

TONGUE & GROOVE

High precision power chucks Ø 215 - 400 mm

- Long stroke
- Closed center
- 3 jaws
- proofline® chucks = fully sealed – low maintenance

Application/customer benefits

- For large batch production
- Fully sealed, ideal for dry machining of castings and forgings or if high pressure coolant is used
- Large clamping range

APL-C: TONGUE & GROOVE master jaws (American Standard)

Technical features

- Extra long jaw stroke
- Constant gripping force with permanent grease lubrication
- Center bore for coolant and / or air
- Chuck body and internal parts case hardened
- **proofline® chucks** = fully sealed – low maintenance

Standard equipment

3 jaw chuck
Mounting bolts

Ordering example

3 jaw chuck APL-C 215 / A6

Actual gripping force diagrams

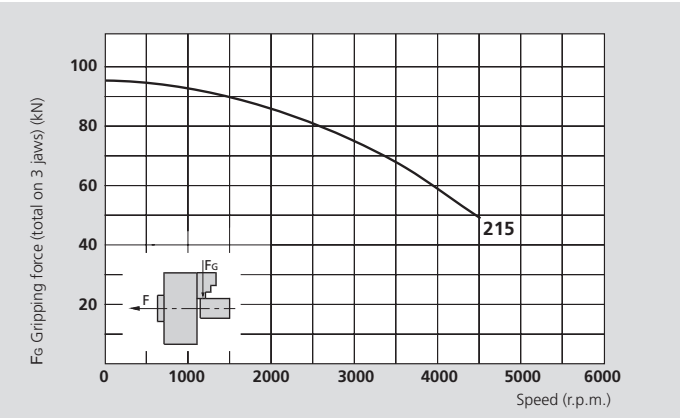

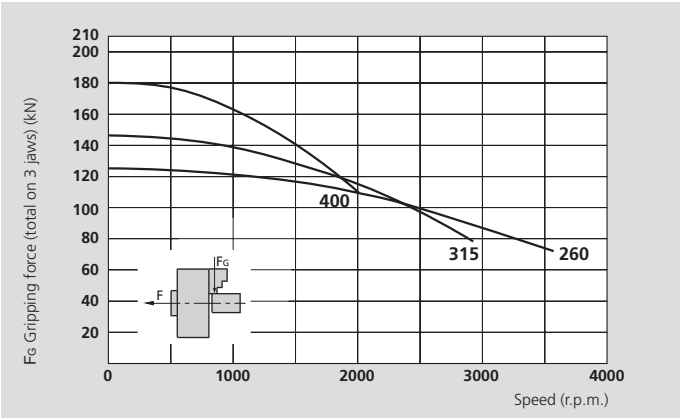

The data in the diagrams refer to 3 jaw chucks, newly maintained according to their service manuals using SMW-AUTOBLOK K67 grease. The static and dynamic gripping forces have been measured using standard soft top jaws, placed in a position not exceeding the outer diameter of the chuck.

⚠ **Safety advice / danger of damage:**
When using taller / heavier jaws and / or clamping on a bigger diameter reduce draw pull / rotating speed accordingly.

Technical data

SMW-AUTOBLOK Type		APL-C 215	APL-C 260	APL-C 315	APL-C 400
Radial jaw stroke	mm	8.5	9.7	12.1	13.3
Axial piston stroke	mm	21	24	30	33
Max. draw pull*	kN	53	68	80	100
Max. gripping force*	kN	95	125	145	180
Max. speed	r.p.m.	4500	3600	2800	2000
Weight (without top jaws)	kg	19.5	32.5	56	90
Moment of inertia	kg·m²	0.113	0.28	0.69	1.7
Recommended actuating cylinders	**Type**	**SIN-S 100 / 125**	**SIN-S 125 / 150**	**SIN-S 125 / 150**	**SIN-S 150 / 175**

* For internal clamping reduce the draw pull by 30%.

on request:
Tooling Standard Parts Catalog

SMW-AUTOBLOK 438

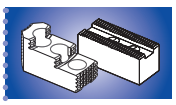

SMW-AUTOBLOK 440

SMW-AUTOBLOK 297

High precision power chucks Ø 215 - 400 mm

- Long stroke
- Closed center
- 3 jaws
- proofline® chucks = fully sealed – low maintenance

APL-C

TONGUE & GROOVE

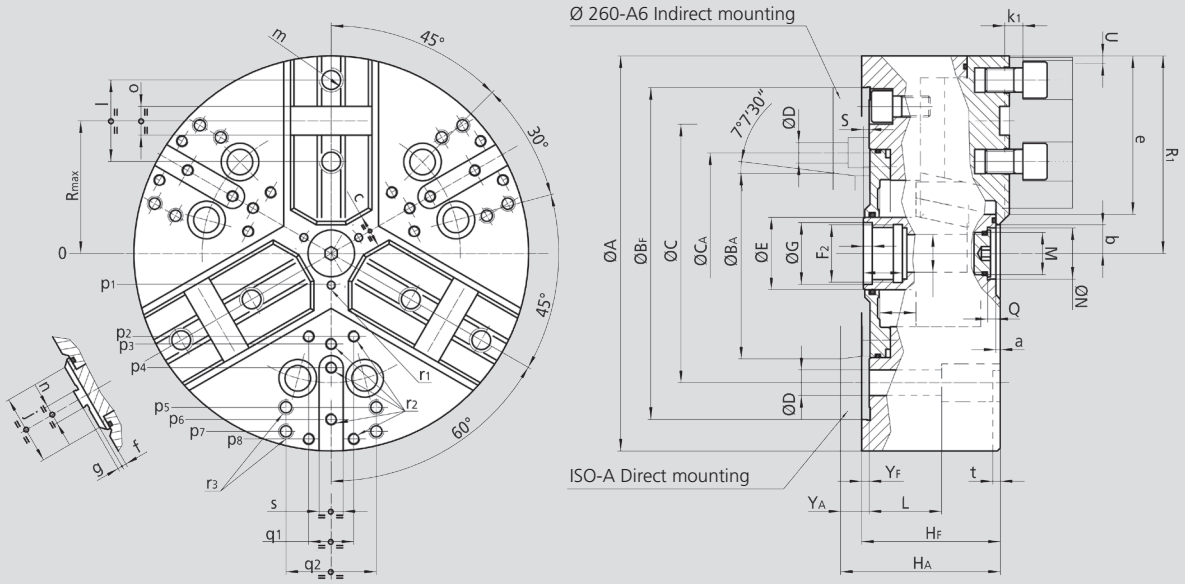

Subject to technical changes.
For more detailed information please ask our customer service.

SMW-AUTOBLOK Type			APL-C 215		APL-C 260			APL-C 315		APL-C 400	
Mounting			Z170	A6	Z220	A6	A8	Z220	A8	Z300	A11
	A	mm	216		262			315		390	
	BF/BA H6	mm	170	106.375	220	106.375	139.719	220	139.719	300	196.869
	C	mm	133.4		171.4		171.4	171.4		235	
	CA	mm	-	-	-	133.4	-	-	-	-	-
	D	mm	13.5		17	13.5	17	17		21	
	E	mm	42		48			48		75	
	F2	mm	M32 x 1.5		M38 x 1.5			M38 x 1.5		M60 x 1.5	
	G H8	mm	33		39			39		61	
	HF/HA	mm	81	93	92	111	106	101	115	112	127
	K	mm	20		25			25		48	
	L	mm	32		38			38		54	
	M	mm	M22 x 1.5		M28 x 1.5			M28 x 1.5		M52 x 1.5	
	N H9	mm	24		34			34		60	
	Q	mm	5.5		5.5			5.5		9	
Chuck open	R1	mm	112.5		136			163.5		202	
Max.	R	mm	76		92.5			111		139	
Max. / min.	S	mm	25 / 4		28 / 4			34 / 4		37 / 4	
Radial jaw stroke	U	mm	8.5		9.7			12.1		13.3	
	W	mm	26		26			26		38	
	YF/YA	mm	5	17	5	24	19	5	19	6	21
Max. / min.	Z	mm	21 / 0		24 / 0			30 / 0		33 / 0	
	a	mm	3		3			3		3	
Min.	b	mm	8.5		9			11		24.5	
Min.	c	mm	6.2		6			6		28	
	e	mm	87		107			129		150	
	f	mm	3		3			3		6	
	g	mm	3		3			3		3	
	j	mm	46		48			58		63	
	k1	mm	11		12			12		14	
	l	mm	44.4		54			63.5		76.2	
	m	mm	M12		M16			M16		M20	
	n h8	mm	7.94		12.70			12.70		12.70	
	o H7	mm	12.68		19.03			19.03		19.03	
	p1	mm	16		21			21		37.5	
	p2	mm	-		-			60		80	
	p3	mm	49		55			62.5		83	
	p4	mm	80		70			80		110	
	p5	mm	80		102			102		140	
	p6	mm	-		102			120		155	
	p7	mm	-		-			135		170	
	p8	mm	-		-			-		170	
	q1	mm	-		-			30		36	
	q2	mm	45		60			60		80	
	r1	mm	M5 / 8		M6 / 10			M6 / 10		M6 / 12	
	r2	mm	M8 / 17		M8 / 17			M8 / 17		M10 / 19	
	r3	mm	M8 / 17		M10 / 19			M10 / 19		M12 / 22	
	s	mm	16		16			16		20	
	t	mm	5		5			5		5	