SMW AUTOBLOK

Zero point clamping systems | 5-axis vises | Stationary chucks | Twin Vises | Tombstones

MAIN CATALOGUE Stationary Workholding

stationary

www.smw-autoblok.de

SMW-AUTOBLOK worldwide

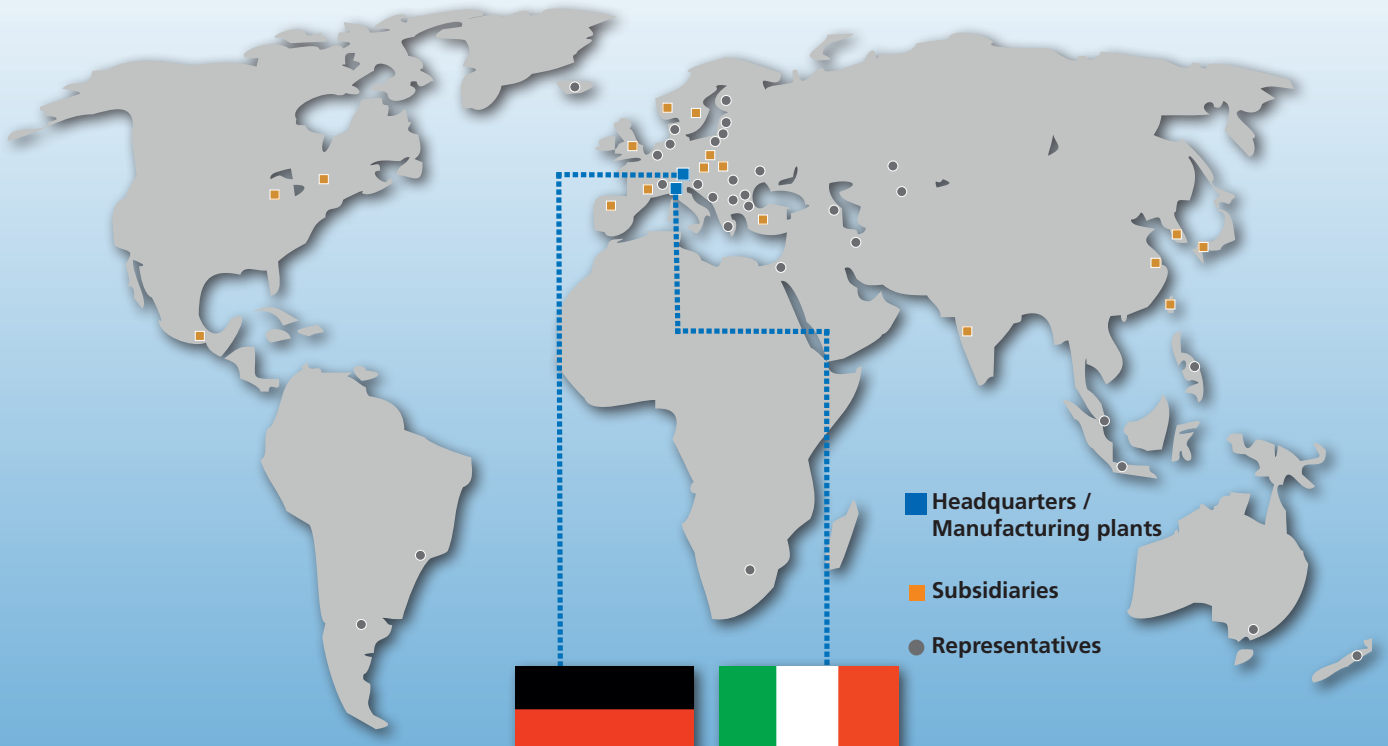

SMW-AUTOBLOK manufacturing plant Meckenbeuren
development | production | distribution | service | support

AUTOBLOK manufacturing plant Caprie-Torino

Visit our website: www.stationary-workholding.com

Latest product catalog | Product innovations | Contact data | 3D Customer data

Significant reduction of set-up times

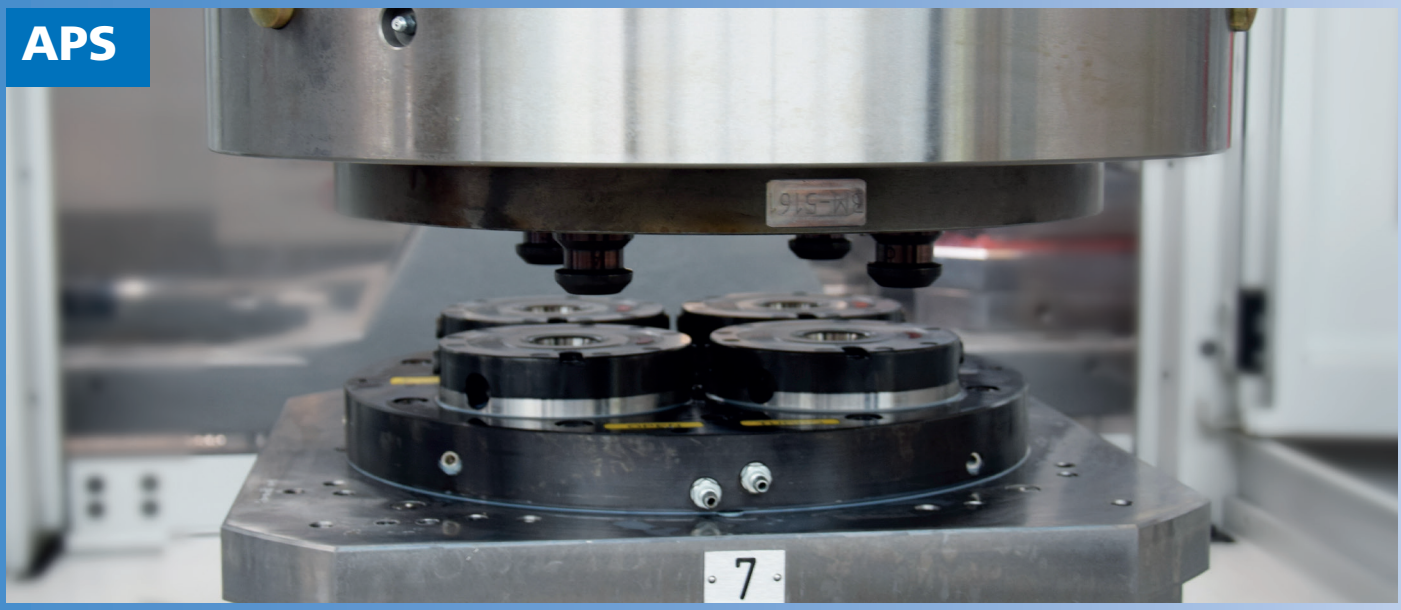

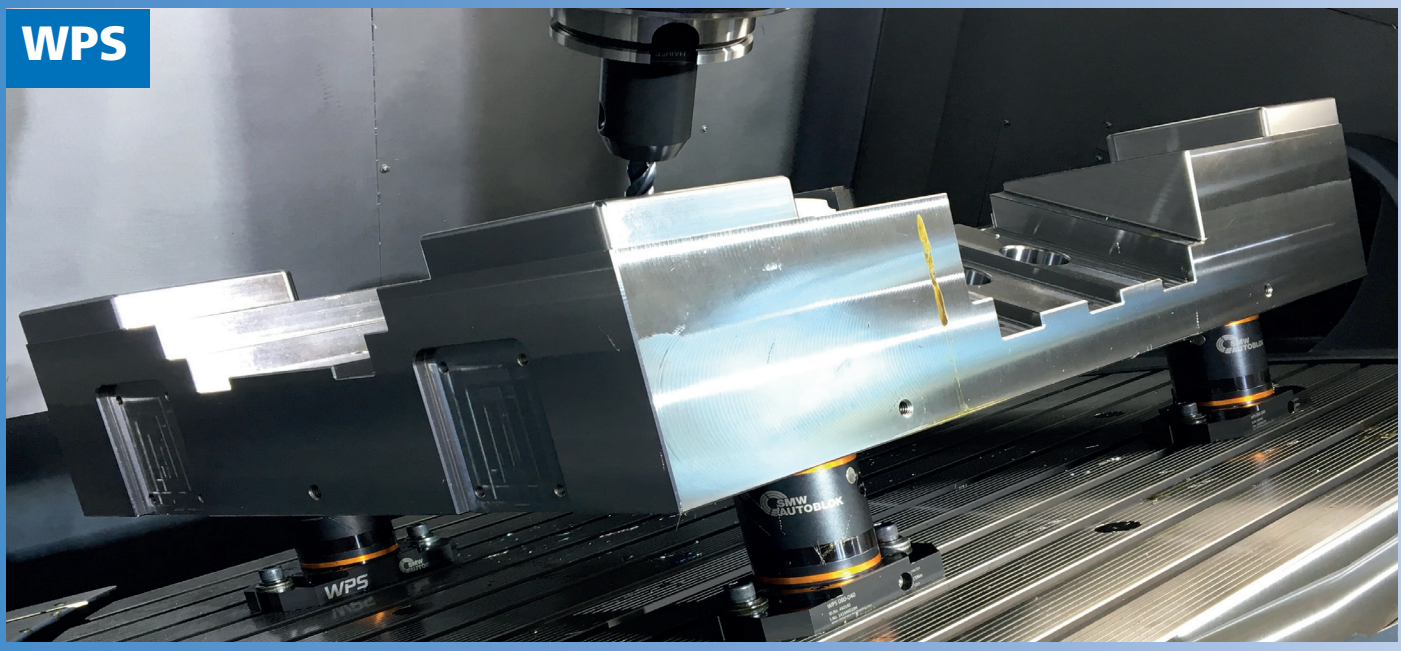

Zero point clamping systems (Page 1 of 2)

APS

Zero point clamping system modules

- Highest precision
- Maximum pull-down forces due to turbo function
- Suitable for automation
- Low installation height due to compact design
- Modules fully sealed (proofline)

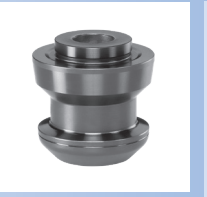

APS

Clamping pins

- Large entry radii on the clamping pins for easy and safe loading
- Wear-resistant

APS

Clamping units

- Fully assembled clamping unit
- Ready to use
- Customer-specific versions available in a short time

APS

Module height extensions

- Ready to use single module units
- Different heights

APS

Special clamping units

- Customer-specific versions
- For vertical lathes
- For automation

APS

Special module height extensions

- For automation

APS

Combi units

- Ready to use combi module units
- Different heights

APS

Clamping pallets

- Fully assembled clamping pallet
- Optional with interface for module height extension
- Customized clamping pallets for any machine / application

APS

Spacers

- Adapt one or more combi units

APS

Accessories

- Protection covers
- Pins and keys for orientation (single use)
- Fixing screws for clamping units

Significant reduction of set-up times

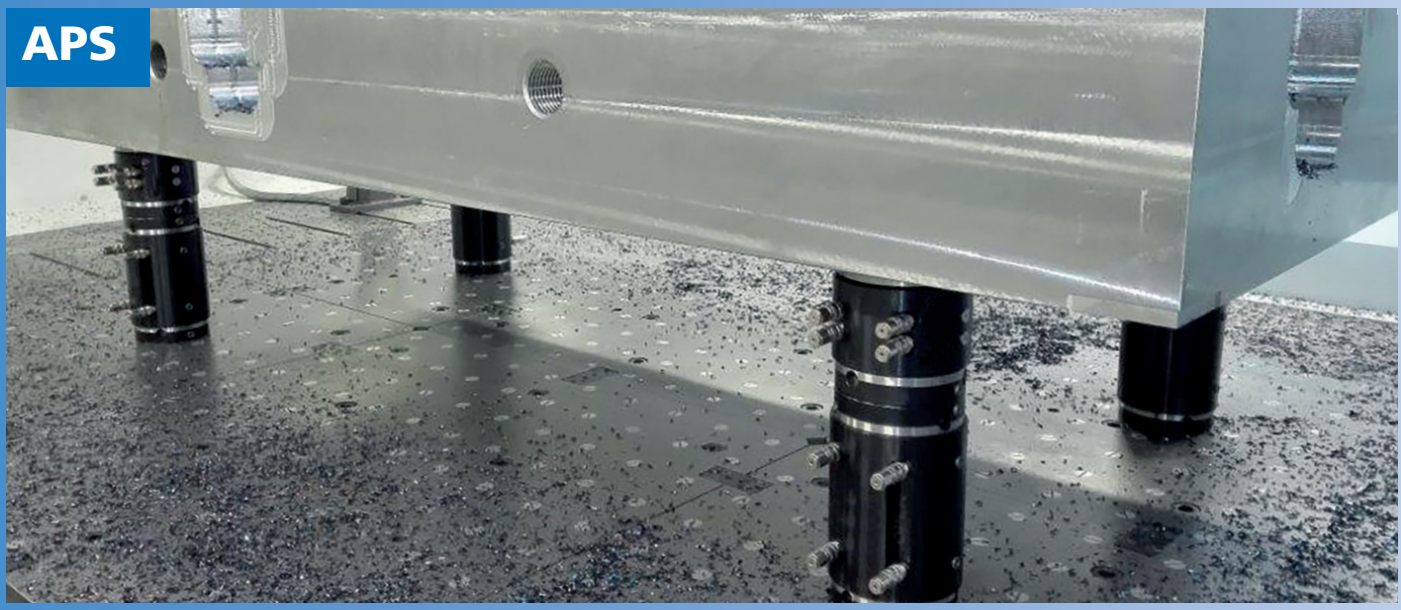

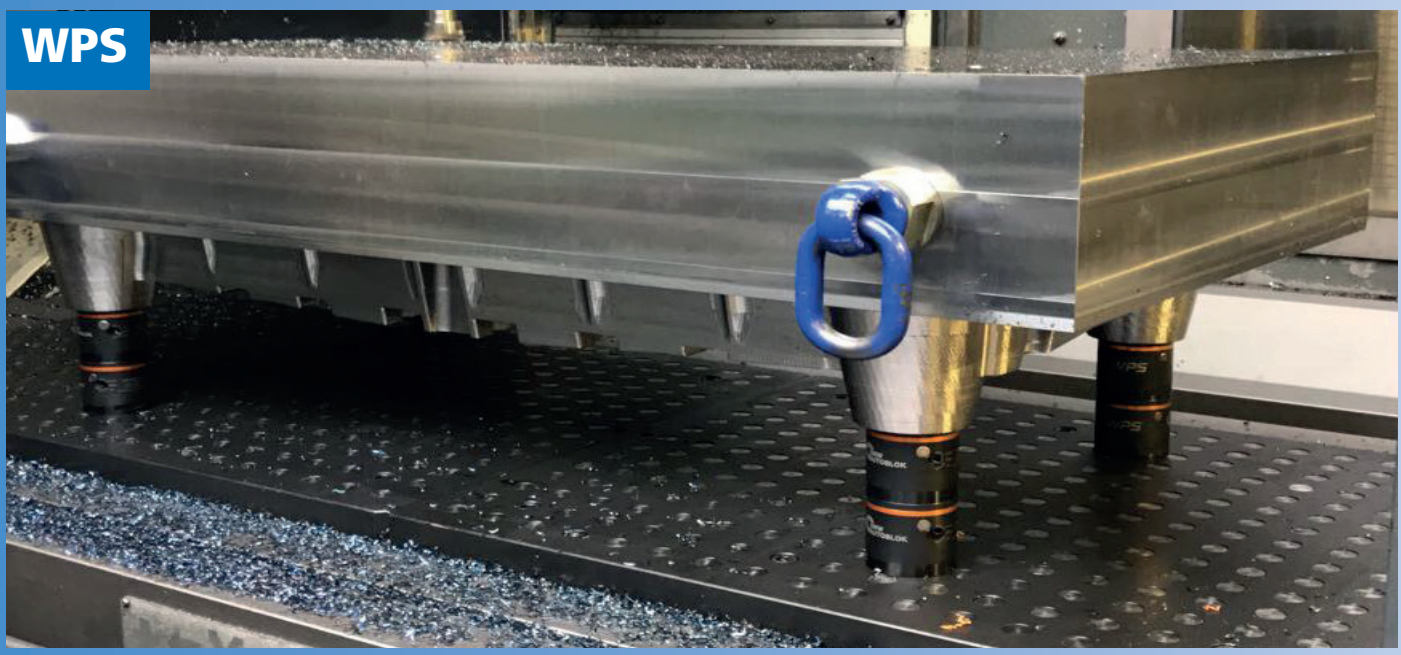

Zero point clamping systems (Page 2 of 2)

Page 74

WPS-PPD

Workpiece preparation device

- Ideal for OP 10
- Preparation of the workpiece for WPS
- Clamping height of the workpiece adjustable
- Very strong and compact design

Page 80

WPS-PPD

Accessories

- Adaptation ring
- Clamping bar
- Stop pins, pendulum inserts
- Clamping pin

Page 86

WPS Mini

Mini workpiece positioning system

- Mini version - 40 mm diameter
- Manual quick actuation (270° rotation)
- Highest repeatability
- Maximum pull-down and holding forces
- Modules fully sealed **(proofline)**

Page 92

WPS Mini

Accessories

- Clamping pin
- Reducing adapter
- Adaptation ring
- Grid plates

Page 94

WPS Max

Workpiece positioning system

- Ideal for workpiece direct clamping
- Highest precision
- Single quick-actuation
- Opening and closing with only 3.5 rotations
- Maximal holding forces
- Modules fully sealed **(proofline)**

Page 100

WPS-Z-Flex

Workpiece positioning system

- Ideal for workpiece direct clamping
- Highest precision
- Single quick-actuation
- Opening and closing with only 3.5 rotations
- Maximal holding forces
- Modules fully sealed **(proofline)**
- Continuously adjustable

Page 102

WPS Max

Accessories

- Clamping pins
- Adaption ring
- Reducing washer
- Spacers
- Positioning set
- Workpiece stabilizer

Page 114

WPS XL

Workpiece positioning system

- XL version - 140 mm diameter
- Ideal for workpiece direct clamping
- Highest precision
- Single quick-actuation
- Maximal holding forces
- Modules fully sealed **(proofline)**

Page 119

WPS XL

Accessories

- Clamping pins
- Adaptation ring
- Slide hammer
- Pre-instructor

Page 122

ZeroAct

Connectable flexible zero point module

- Up to 3 modules connectable in a row with central actuation
- Very flat design
- Manual quick actuation (270° rotation)
- Highest repeatability
- Maximum pull-down and holding forces
- Modules fully sealed (proofline)

Page 125

ZeroAct

Accessories

- Clamping bolt
- Clamping disk/clamping claw
- Distance gauge

APS zero point clamping system

Industry 4.0 Product

1 Customer benefits

- Fully sealed (proofline)
- Highest stiffness by means of 3 clamping slides
- Low installation height due to the compact design
- Highest process reliability and repeat accuracy < 0.005 mm
- Modular construction kit system: Existing clamping systems can be modified very easy
- Significantly reduced costs due to reduced set-up times

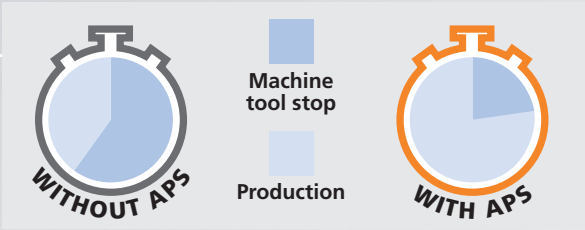

2 Machine set-up costs

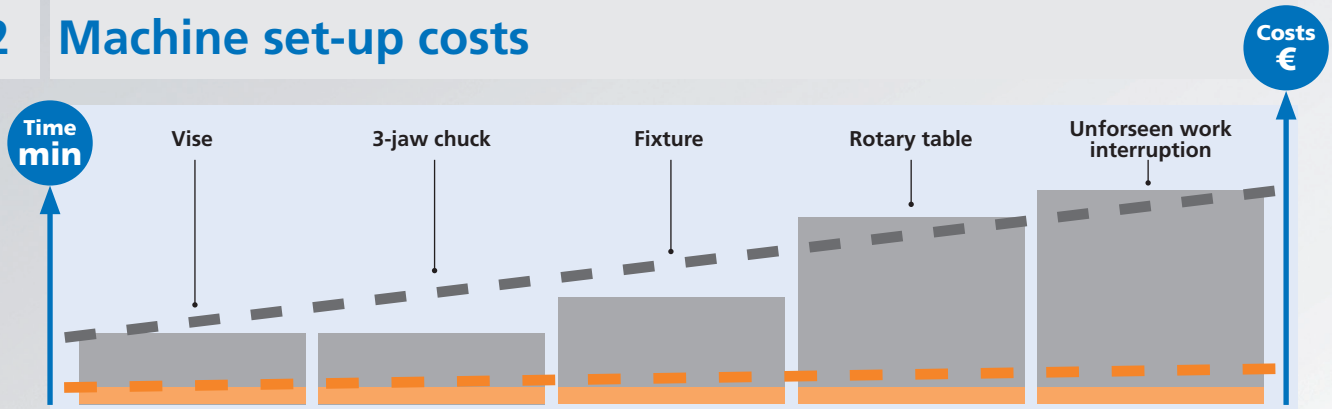

- Machine set-up costs without APS

  Time = Costs

- Machine set-up costs with APS

  Time = Costs

WATCH THE VIDEO

3 Overview APS versions

BASIC
- 2 Clamping slides
- Turbo function
- Sealed

PREMIUM LIGHT
- 3 Clamping slides
- Turbo function
- Air cleaning
- Sealed

PREMIUM LIGHT SC
- 3 Clamping slides
- Turbo function
- Air cleaning
- Stroke control system
- Air sensing
- Sealed

PREMIUM
- 2-3-6 Clamping slides (based on sizes)
- Turbo function
- Air sensing
- Air cleaning (100-140 sizes)
- Sealed
- 2 or 4 feedings
- Key
- Stroke control system (except 100 size)
- 100 size no "SC Version" available

Type	APS classification	Size	Clamping slides	Turbo	Air cleaning	Stroke control	Air sensing	Key	Feedings	+10°C + 70°C
BASIC	BASIC	100	2	●						●
		140	2	●						●
PREMIUM LIGHT	PREMIUM LIGHT	140	3	●	●					●
PREMIUM LIGHT SC	PREMIUM LIGHT SC	140	3	●	●	●	●			●
	PREMIUM LIGHT SC	160	3	●	●	●	●			●
PREMIUM SC	PREMIUM	100	2	●	●		●	●		●
	PREMIUM SC	140	3	●	●	●	●	●		●
		190	3	●		●	●	●		●
		250	6	●		●	●	●		●
	PREMIUM SC-6S	190	3	●		●	●	●	●	●

APS Features

SIZES 100-140-160-190-250

Industry 4.0 Product

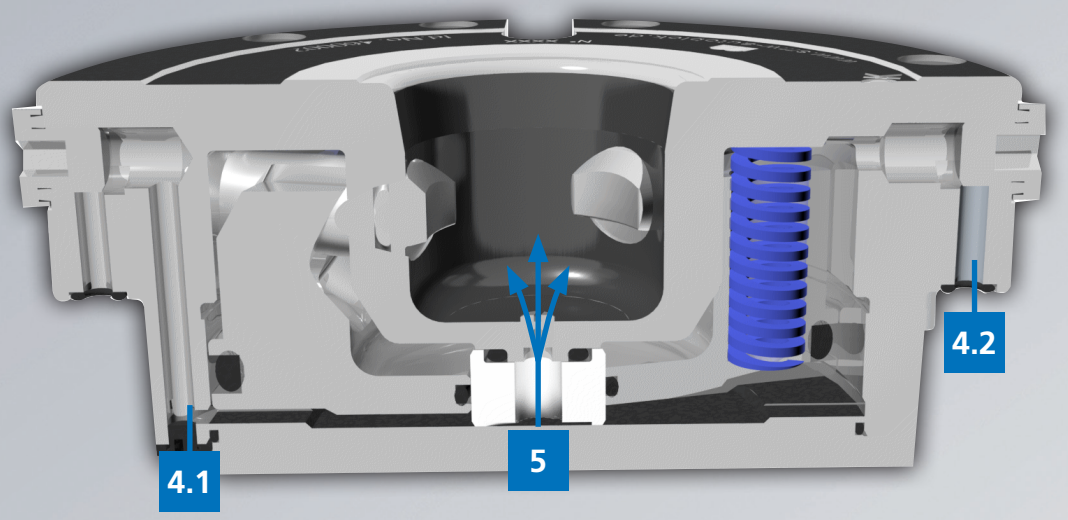

1 Maximum rigidity

Jaws with double inclined plane which generates the "PULL DOWN" effect and piston with integral inclined planes.

2 Maximum accuracy

Maximum accuracy of the tapered coupling between the pin and the module.

3 Air sensing

It is possible to monitor the clamping device's supporting surface through the air sensing.

4 Turbo function

- **4.1 Unlocking function**
  at 6 bar
- **4.2 Turbo function**
  The TURBO function is always integrated in APS PREMIUM modules TURBO is the function by means of which the compressed air increases the clamping force applied by the springs until reaching the "PULL DOWN" clamping force.

5 Air cleaning

The built-in air cleaning function ensures that the clamping system's supporting surface remains clean and free of chips while the modules are being opened.

6 Clamping system with 3 clamping slides at 120°

APS is the only one zero point clamping system with 3 clamping slides at 120° and thanks to special treatments of the pins and the clamping slides further improves its durability.

- Centering the stud in the body perfectly
- Vibration dampening with tooling working from any direction
- More accuracy and better vibration dampening

7 Stroke control system

The SC system is ideal for automated applications with robot loading and unloading of the pallets. The APS locking and unlocking is monitored by air pressure.

7.1 Locking position

The air enters from the lower side inlet the hole and exits out from the hole **w** = pressure drop in the line and the machine receives a "APS locked" confirmation.

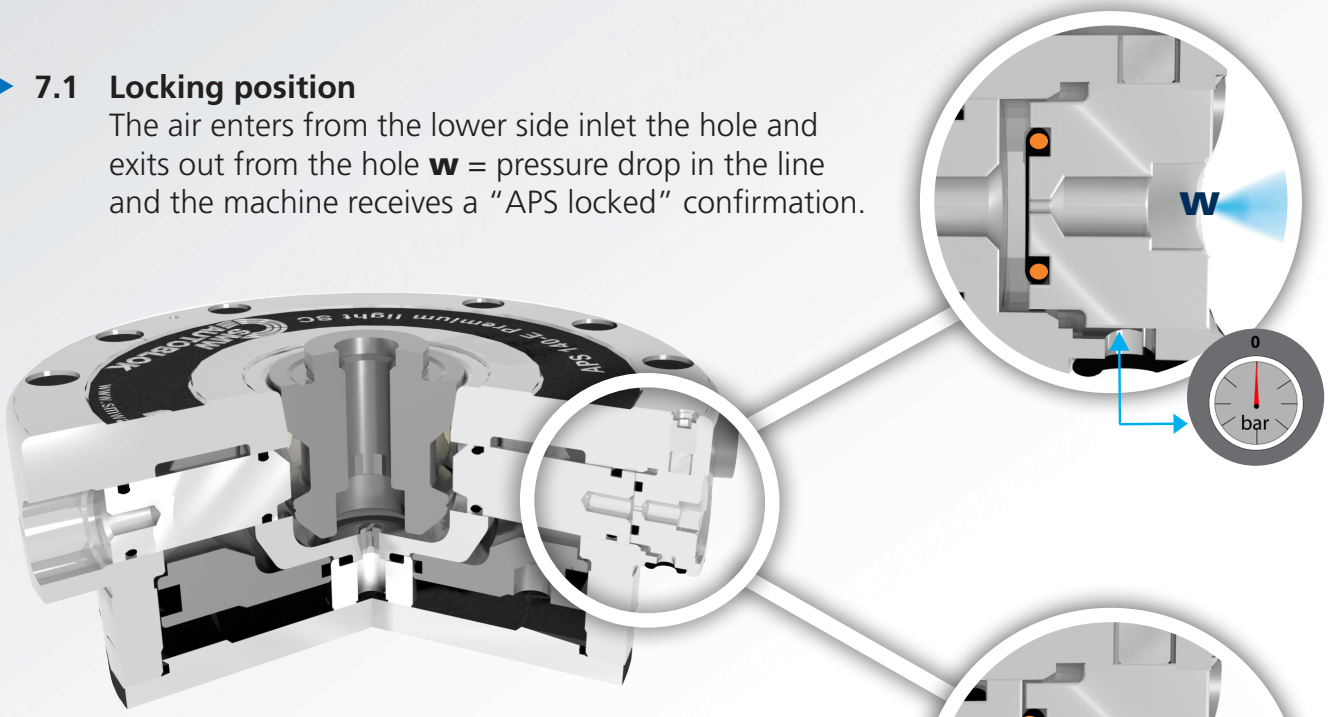

7.2 Unlocking position

The air enters from the lower side inlet and it can't escape from the hole **w** = no pressure drop in the line and the machine receives a "APS unlocked" confirmation.

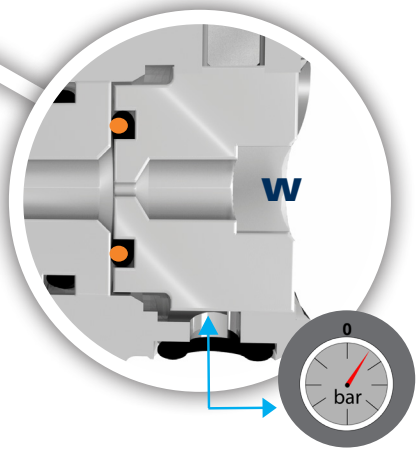

ATTENTION: the pneumatic system of the pressure switch must signal the alarm condition and must prevent the pallet exchange on the APS or any robot operation when the inlet pressure is less than 6 bar.

APS 100 E

FOR EXTERNAL MOUNTING

Ø100 ZERO POINT MODULE

- 2 clamping slides
- TURBO function to increase the pull-down force
- proofline® chucks = fully sealed - low maintenance

Application/customer benefits

- Increase in economic efficiency of all machine types due to significantly reduced setup times
- Repeatable positioning
- Highest pull-down and holding forces for maximum machine performance
- Anti-rotation device (PREMIUM only) for use as a single module
- Optional air sensing and stroke monitoring for automation
- Modular system: extensive standard program for a wide range of machines and applications

Technical features

- Wear-resistant case hardened components
- Highest repeatability < 0.005 mm
- Clamping by spring force, additional increase of pull-down force by turbo function
- 2 Clamping slides for secure locking of the clamping bolt
- Air sensing control for automation applications (PREMIUM only)
- Integrated air purge function for cleaning clamping bolts contact surfaces (PREMIUM only)
- Bottom or side actuation for flexible installation

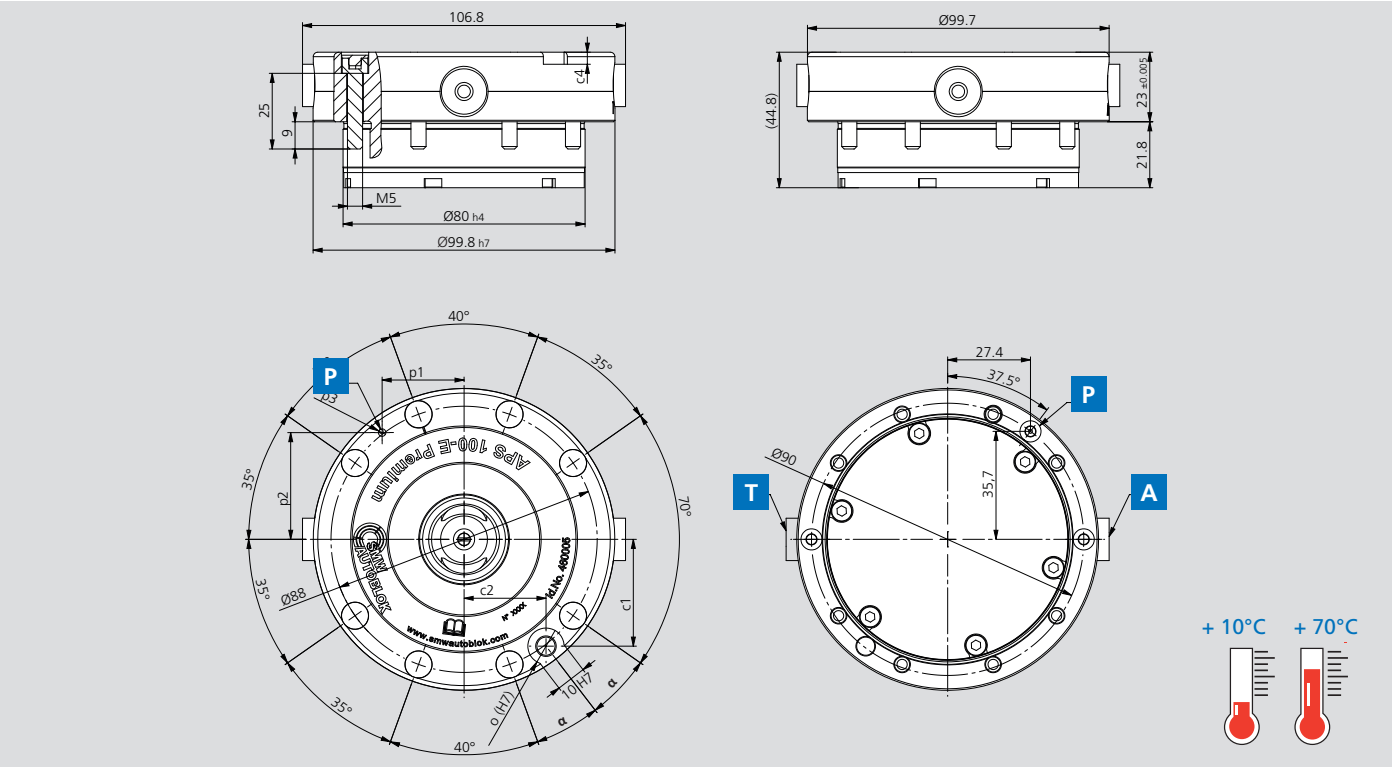

Technical data

Type	APS 100E PREMIUM	APS 100E BASIC
Id.No.	**460005**	**460007**
c1	35.3	-
c2	27.1	-
c4	4	-
p1	27.1	-
p2	35.3	-
p3	Ø 2.5	-
o (H7)	Ø 12	-
α	17.5°	-
Pull down force	4 / 15**kN	
Holding force (*)	13 (M6)***25 (M8) kN	
Unlocking pressure	6 bar	
Repeatability	< 0.005 mm	
Weight (kg)	1.9 kg	
Anti-rotation key seat	YES	NO
Clamping jaws	2	2
Air cleaning	YES	NO
Air sensing **[P]**	YES	NO

Turbo function **[T]** to increase the pull-down force / **[A]**= Open
(*) with screws DIN EN ISO 4762-12.9 / (**) with TURBO function / (***) screws EN-ISO10642

Ø140 ZERO POINT MODULE

- 2-3 clamping slides
- TURBO function to increase the pull-down force
- proofline® chucks = fully sealed - low maintenance

APS 140 E

FOR EXTERNAL MOUNTING

Application/customer benefits

- Increase in economic efficiency of all machine types due to significantly reduced setup times
- Repeatable positioning
- Highest pull-down and holding forces for maximum machine performance
- Anti-rotation device (PREMIUM SC only) for use as a single module
- Optional air sensing and stroke monitoring for automation
- Modular system: extensive standard program for a wide range of machines and applications

Technical features

- Wear-resistant case hardened components
- Highest repeatability < 0.005 mm
- Clamping by spring force, additional increase of pull-in force by turbo function
- 3 Clamping slides for secure locking of the clamping bolt (Basic 2 clamping slides)
- Air sensing control for automation applications (PREMIUM SC/ LIGHT SC only)
- Integrated air purge function for cleaning clamping bolts contact surfaces (PREMIUM LIGHT / SC / LIGHT SC only)
- Stroke control SC for automation application
- Bottom or side actuation for flexible installation

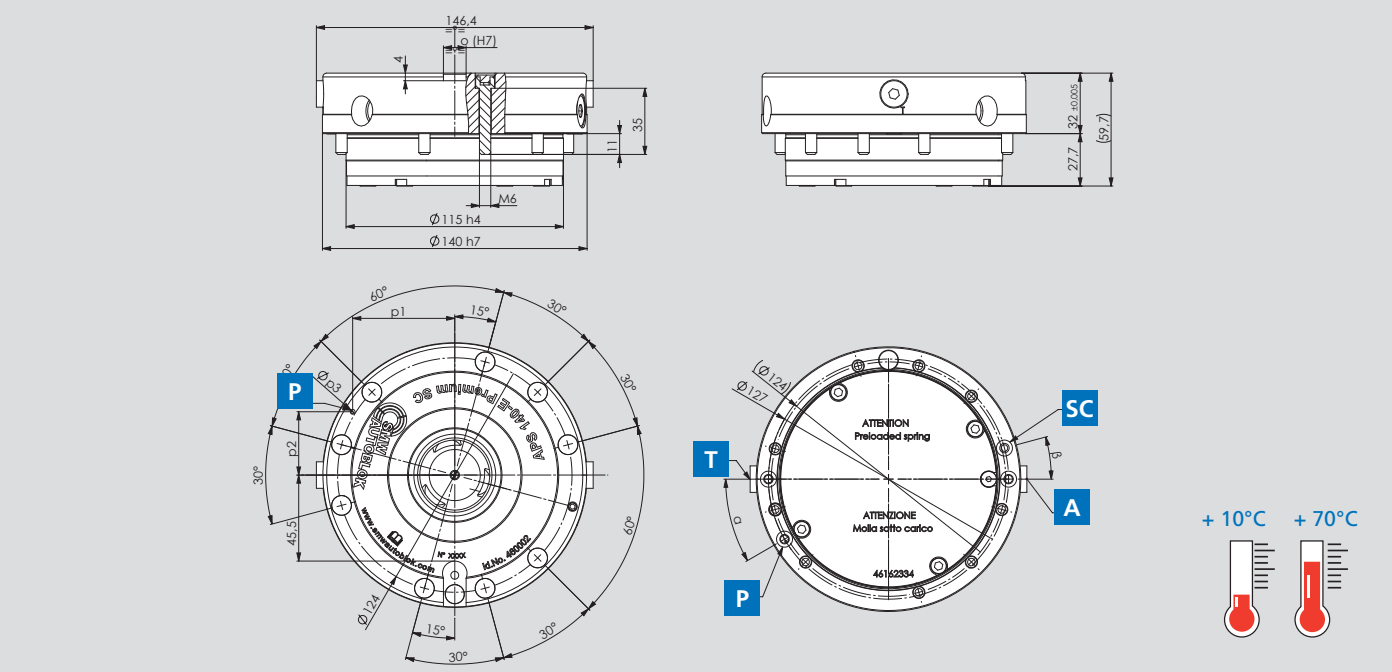

Technical data

Type	APS 140E PREMIUM SC	APS 140E PREMIUM LIGHT SC	APS 140E PREMIUM LIGHT	APS 140E BASIC
Id.No.	**460002**	**46162540**	**460003**	**460001**
b	146,4	146,4	146,4	146,4
e	35	35	35	35
f	11	11	11	11
H (±0,005)	32	32	32	32
H1	59,7	59,7	59,7	59,7
H2	27,7	27,7	27,7	27,7
H3	14	14	14	14
p1	54	54	-	-
p2	33.5	33.5	-	-
p3	Ø 2.5	Ø 2.5	-	-
c4	4	-	-	-
o (H7)	12	-	-	-
α	30°	30°	-	-
β	15°	15°	15°	-
Pull down force	7,5 / 26** kN			
Holding force (*)	35 (M10) 50 (M12) 75 (M16) kN			
Unlocking pressure	6 bar			
Repeatability	< 0,005 mm			
Weight	4,5 kg			
Anti-rotation key seat	YES	NO	NO	NO
Clamping jaws	3	3	3	2
Air cleaning	YES	YES	YES	NO
Pneumatic stroke control **[SC]**	YES	YES	NO	NO
Air sensing **[P]**	YES	YES	NO	NO

Turbo function **[T]** to increase the pull-down force / **[A]**= Open
(*) with screws DIN EN ISO 4762-12.9 / (**) with TURBO function

APS 140 I

FOR INTERNAL MOUNTING

Ø140 ZERO POINT MODULE

- for built-in mounting - 3 clamping slides
- TURBO function to increase the clamping force
- proofline® chucks = fully sealed - low maintenance

Application/customer benefits

- Increase in economic efficiency of all machine types due to significantly reduced setup times
- Repeatable positioning
- Highest pull-down and holding forces for maximum machine performance
- Optional air sensing and stroke monitoring for automation
- Modular system: extensive standard program for a wide range of machines and applications

Technical features

- Wear-resistant case hardened components
- Highest repeatability < 0.005 mm
- Clamping by spring force, additional increase of pull-in force by turbo function
- 3 Clamping slides for secure locking of the clamping bolt
- Air sensing control for automation applications
- Integrated air purge function for cleaning clamping bolts contact surfaces
- Bottom or side actuation for flexible installation

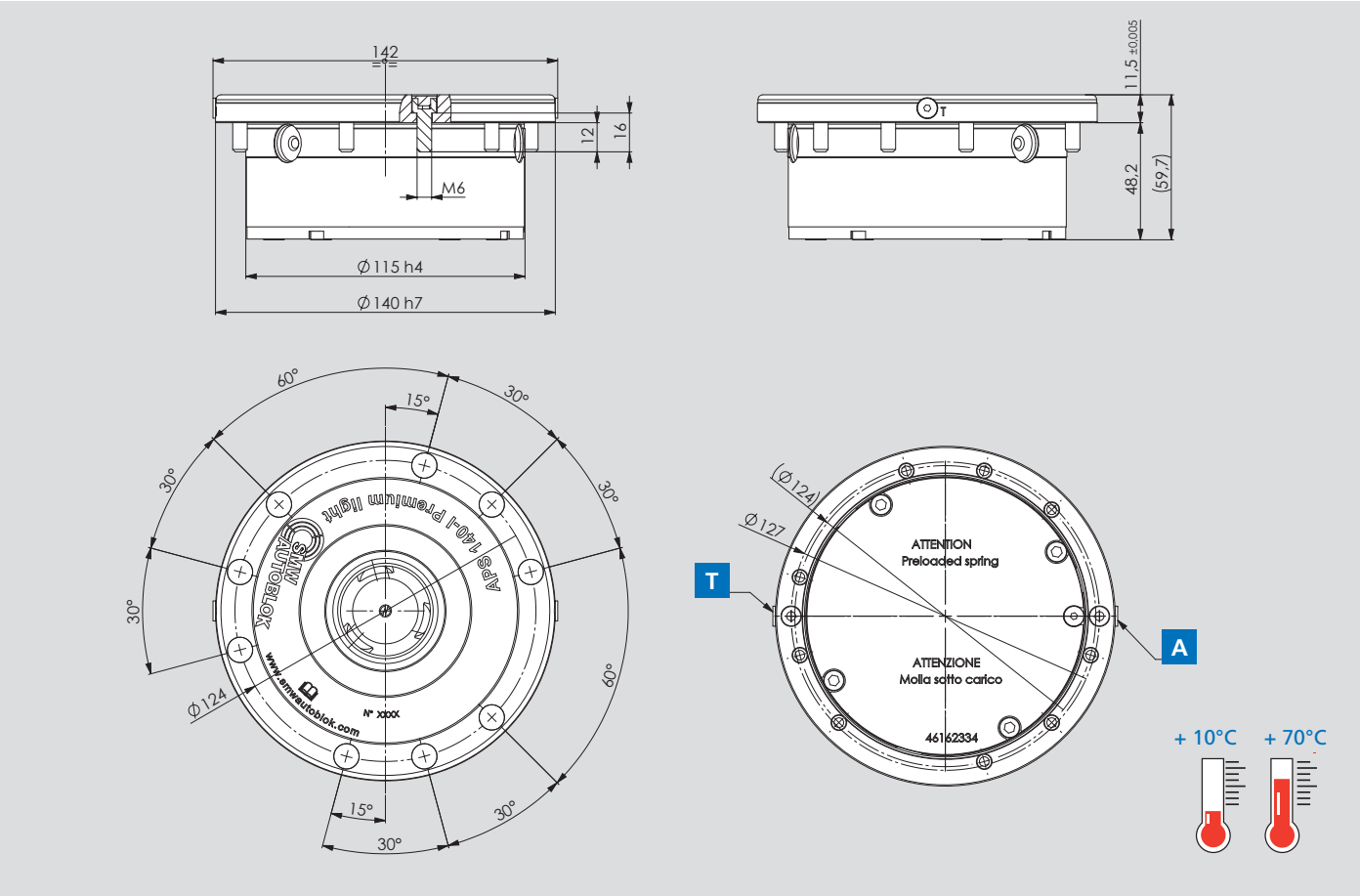

Technical data

Type	APS 140I PREMIUM LIGHT
Id.No.	**46162480**
Pull down force	7,5 / 26**kN
Holding force (*)	35 (M10) 50 (M12) 75 (M16)
Unlocking pressure	6 bar
Repeatability	< 0,005 mm
Weight	4,5 kg
Anti-rotation key seat	NO
Clamping slides	3
Air cleaning	YES
Pneumatic stroke control **[SC]**	NO
Air sensing **[P]**	NO

Turbo function **[T]** to increase the pull-down force / **[A]**= Open
(*) with screws DIN EN ISO 4762-12.9 / (**) with TURBO function

Ø160 ZERO POINT MODULE

- 3 clamping slides
- TURBO function to increase the pull-down force
- proofline® chucks = fully sealed - low maintenance

APS 160 E

FOR EXTERNAL MOUNTING

Application/customer benefits

- Increase in economic efficiency of all machine types due to significantly reduced setup times
- Repeatable positioning
- Highest pull-down and holding forces for maximum machine performance
- Optional air sensing and stroke monitoring for automation
- Modular system: extensive standard program for a wide range of machines and applications

Technical features

- Wear-resistant case hardened components
- Highest repeatability < 0.005 mm
- Clamping by spring force, additional increase of pull-in force by turbo function
- 3 clamping slides for secure locking of the clamping bolt
- Air sensing control for automation applications
- Stroke control (SC) for automation applications
- Integrated air purge function for cleaning clamping bolts contact surfaces
- Bottom or side actuation for flexible installation

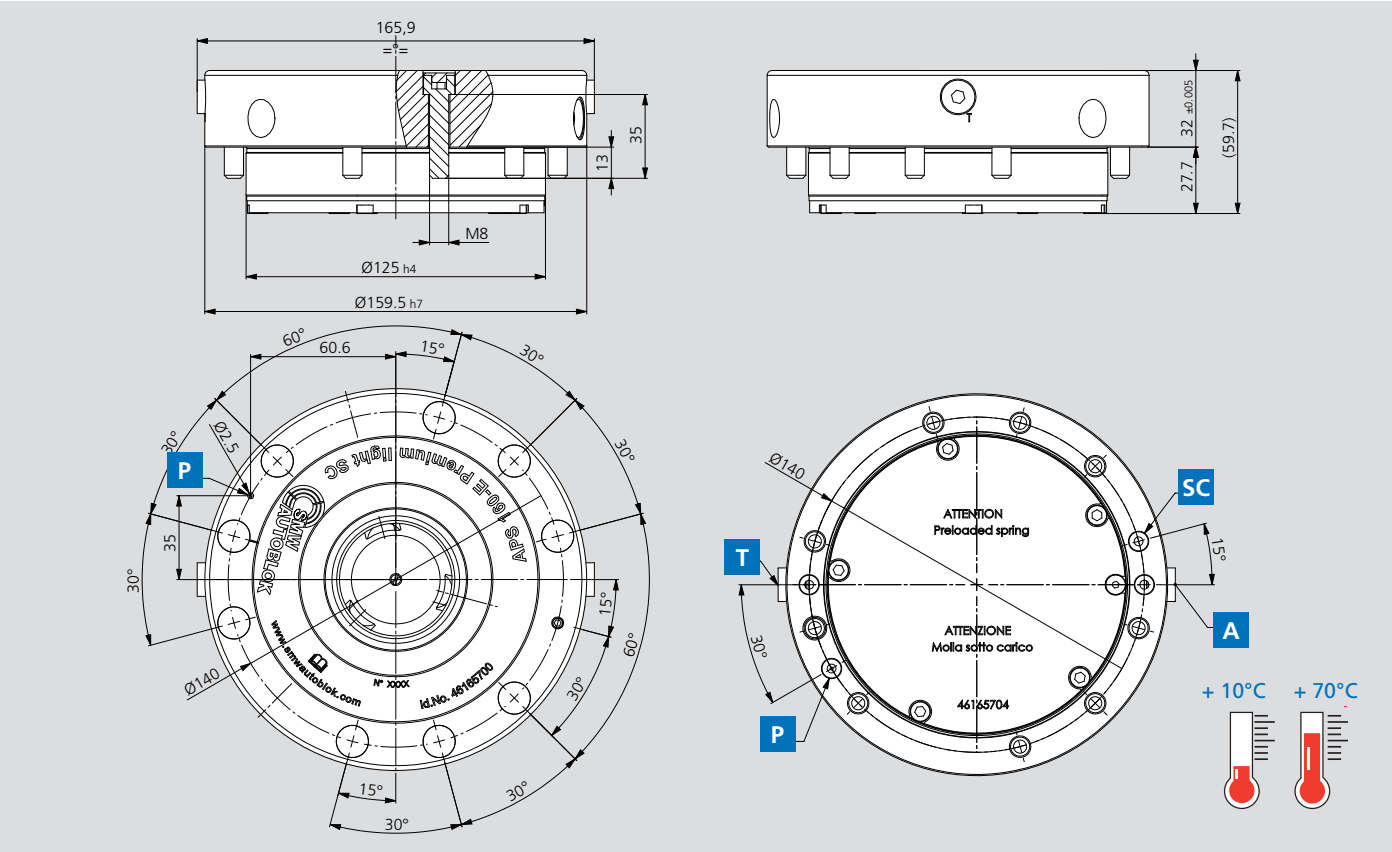

Technical data

Type	APS 160E PREMIUM LIGHT SC
Id.No.	**46165700**
Pull down force	9 / 30**kN
Holding force (*)	50 (M12) 75 (M16) kN
Unlocking pressure	6 bar
Repeatability	< 0,005 mm
Weight	5,9 kg
Anti-rotation key seat	NO
Clamping jaws	3
Air cleaning	YES
Pneumatic stroke control **[SC]**	YES
Air sensing **[P]**	YES

Turbo function **[T]** to increase the pull-down force / **[A]**= Open
(*) with screws DIN EN ISO 4762-12.9 / (**) with TURBO function

APS 190 E

FOR EXTERNAL MOUNTING

Ø190 ZERO POINT MODULE

- 2-3 clamping slides
- TURBO function to increase the pull-down force
- Stroke control system optional

Application/customer benefits

- Increase in economic efficiency of all machine types due to significantly reduced setup times
- Repeatable positioning
- Anti-rotation device for use as a single module
- Highest pull-down and holding forces for maximum machine performance
- Optional air sensing and stroke monitoring for automation
- Modular system: extensive standard program for a wide range of machines and applications

Technical features

- Wear-resistant case hardened components
- Highest repeatability < 0.005 mm
- Clamping by spring force, additional increase of pull-in force by turbo function
- 3 Clamping slides for secure locking of the clamping bolt
- Air sensing control for automation applications
- Stroke control (SC) for automation applications
- Bottom or side actuation for flexible installation

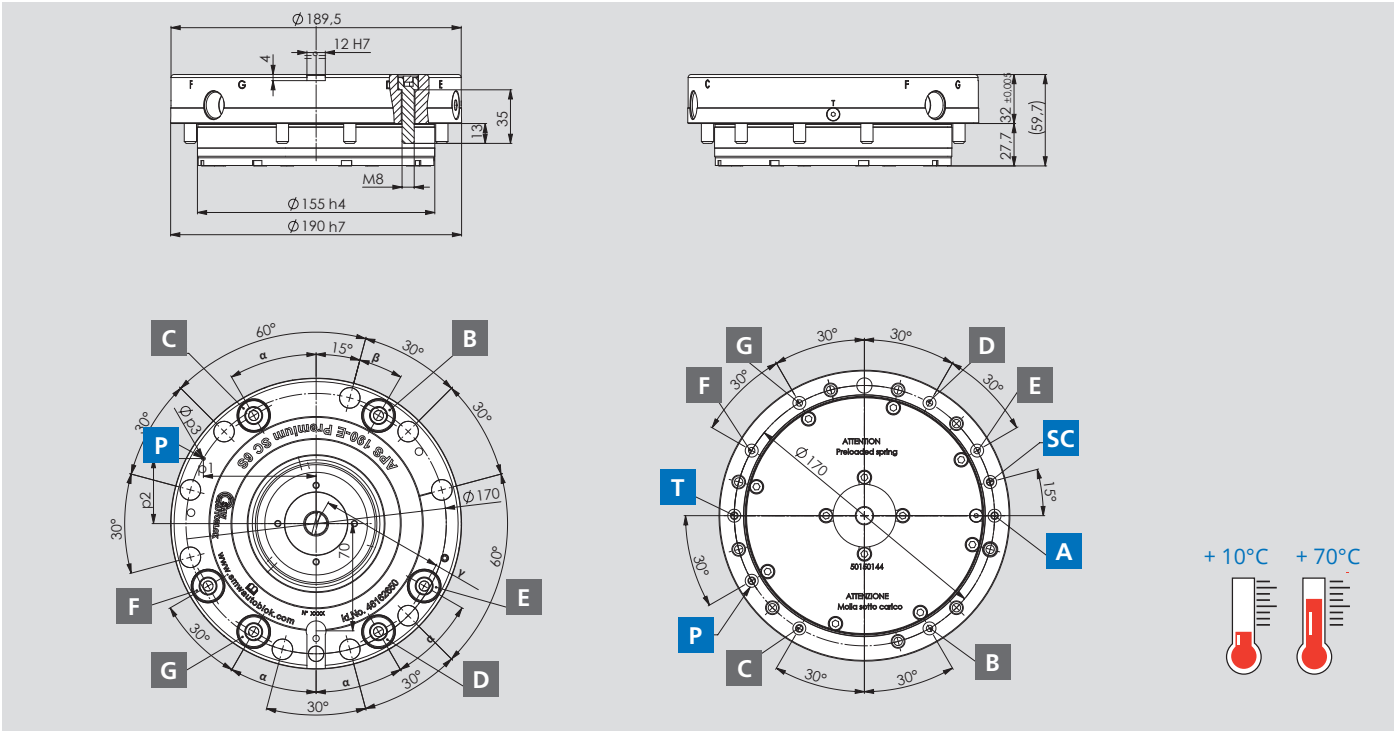

Technical data

Type	APS 190E PREMIUM SC	APS 190E PREMIUM SC-6S
Id.No.	**46165640**	**46162650**
p1	73.6	73.6
p2	42.5	42.5
p3	1.3	1.3
α	-	30°
β	-	15°
ϒ	-	81.5
Pull down force	13,5 / 45**kN	
Holding force (*)	50 (M12) 75 (M16) 80 (6xM6) 150 (6xM8) kN	
Unlocking pressure	6 bar	
Repeatability	< 0,005 mm	
Weight	6,9 kg	
Anti-rotation key seat	YES	YES
Clamping slide	3	3
Pneumatic stroke control **[SC]**	YES	YES
Air sensing **[P]**	YES	YES
N.6 seats **[B] [C] [D] [E] [F] [G]** prepared to mount Pneumatics/Hydraulics couplers	NO	YES

Turbo function [T] to increase the pull-down force / [A]= Open
(*) with screws DIN EN ISO 4762-12.9 / (**) with TURBO function

Ø250 ZERO POINT MODULE

- with pneumatic stroke control - 6 clamping slides
- TURBO function to increase the pull-down force
- proofline® chucks = fully sealed - low maintenance

APS 250 E

FOR EXTERNAL MOUNTING

Application/customer benefits

- Increase in economic efficiency of all machine types due to significantly reduced setup times
- Repeatable positioning
- Highly accurate, repeatable positioning
- Highest pull-down and holding forces for maximum machine performance
- Anti-rotation device for use as a single module
- Optional air sensing and stroke monitoring for automation
- Modular system: extensive standard program for a wide range of machines and applications

Technical features

- Wear-resistant case hardened components
- Highest repeatability < 0.005 mm
- Clamping by spring force, additional increase of pull-in force by turbo function
- 6 Clamping slides for secure locking of the clamping bolt
- Air sensing control for automation applications
- Stroke control (SC) for automation applications
- Bottom or side actuation for flexible installation

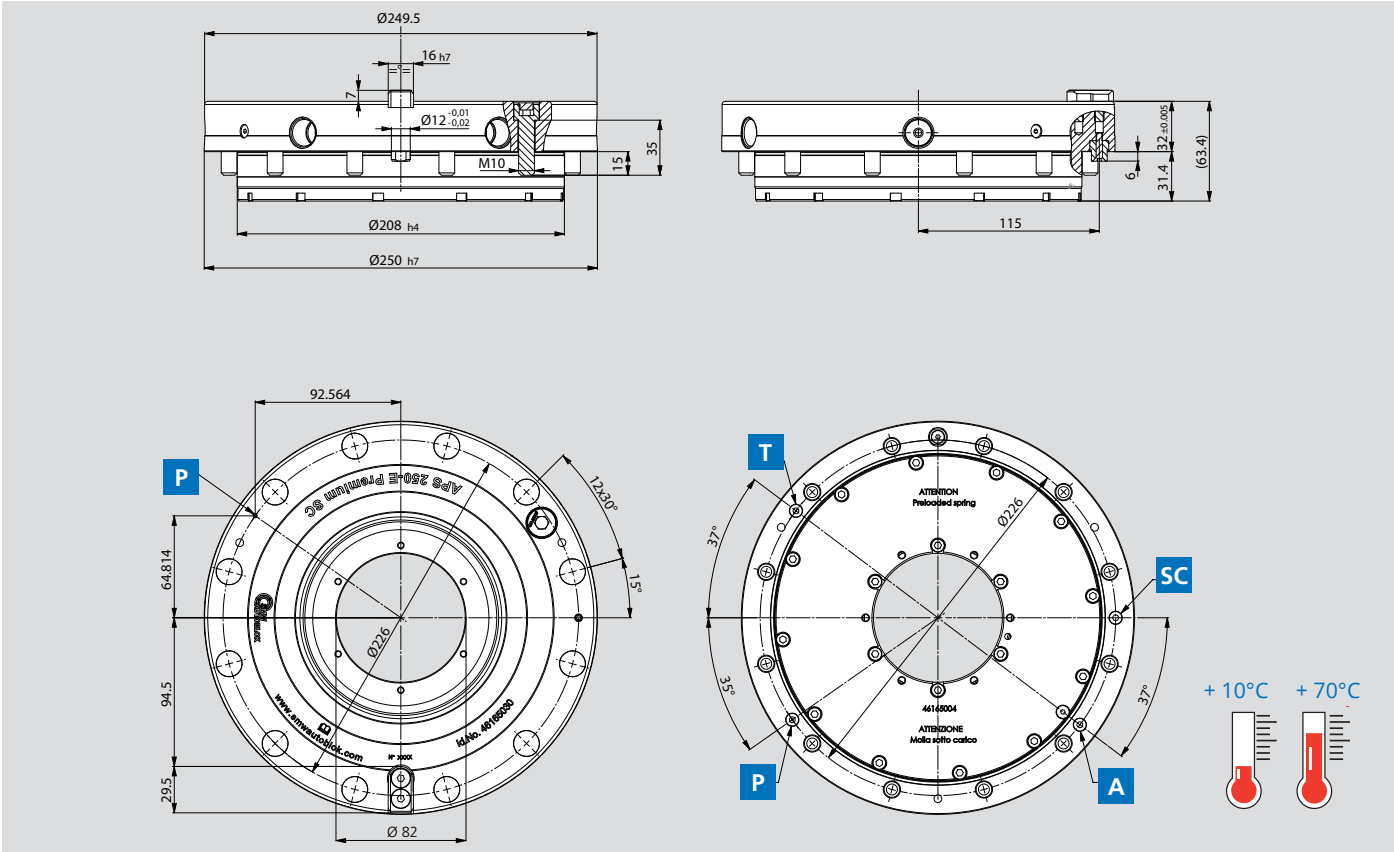

Technical data

Type	APS 250E PREMIUM SC
Id.No.	**46165030**
Pull down force	18 / 55**kN
Holding force (*)	300 (6xM12) 210 (6xM10) 375 (15xM8) kN
Unlocking pressure	6 bar
Repeatability	< 0,005 mm
Weight	15 kg
Anti-rotation key seat	YES
Clamping jaws	6
Pneumatic stroke control **[SC]**	YES
Air sensing **[P]**	YES

Turbo function **[T]** to increase the pull-down force / **[A]**= Open
(*) with screws DIN EN ISO 4762-12.9 / (**) with TURBO function

Clamping pins

Industry 4.0 Product

1 Type and position of the clamping pins

Type A
Centering pin
- Used for centering and clamping

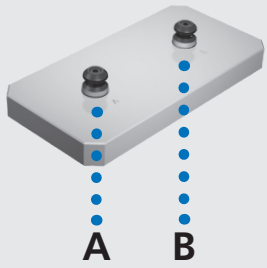

Type B
Sword pin
- Used for reference and clamping

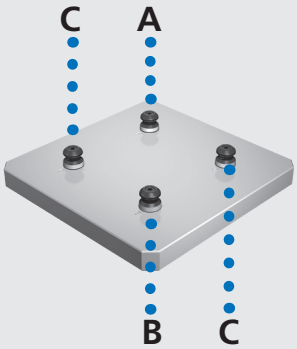

Type C
Pull-down pin
± 0.05 mm
- Only for clamping

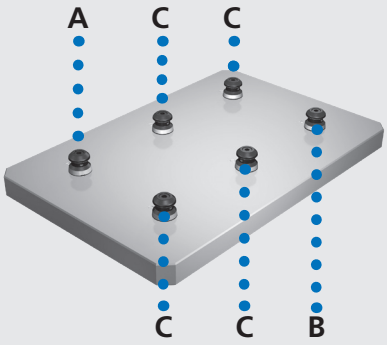

2 Positioning of the sword pin type B

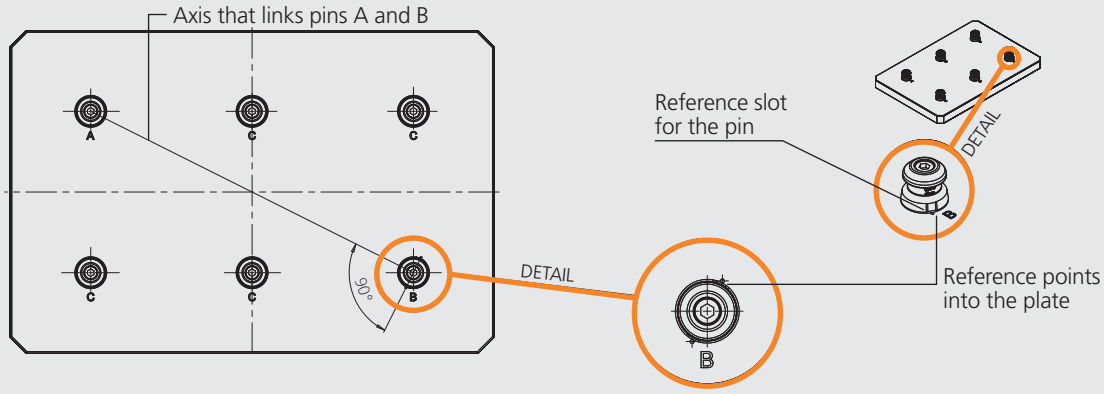

3 Tightening torque for pins mounting bolts

Bolts	Nm
M6	13
M8	35
M10	60
M12	110
M16	200

Pins - M8 thread

APS 100

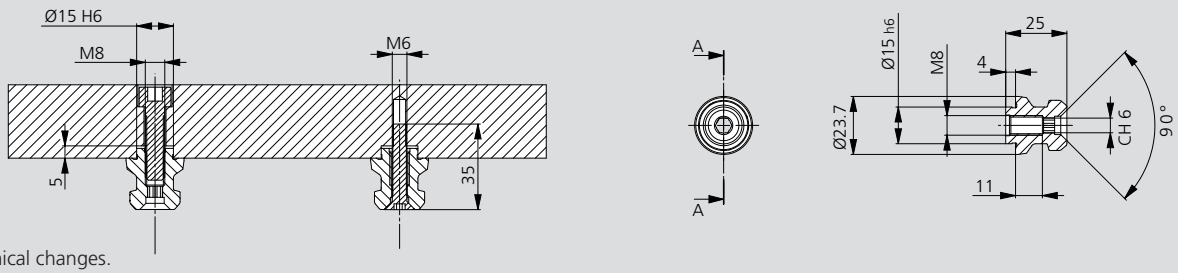

Subject to technical changes.

Id. No.	Type		Weight [kg]
46162155	A	M8	0.05
46162156	B	M8	0.05
46162157	C	M8	0.05

Pins - M12 thread

APS 140

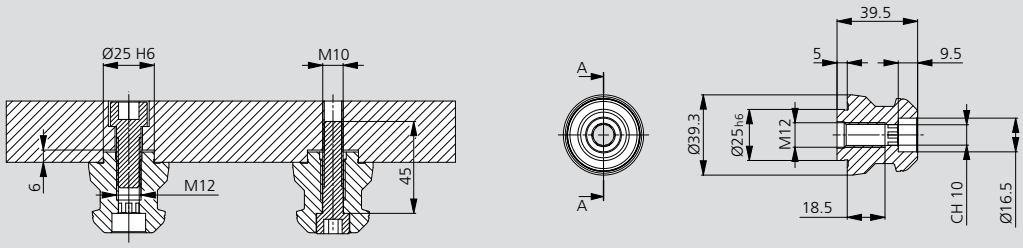

Subject to technical changes.

Id. No.	Type		Weight [kg]
46162355	A	M12	0.2
46162356	B	M12	0.2
46162357	C	M12	0.2

Pins - M16 thread

APS 140

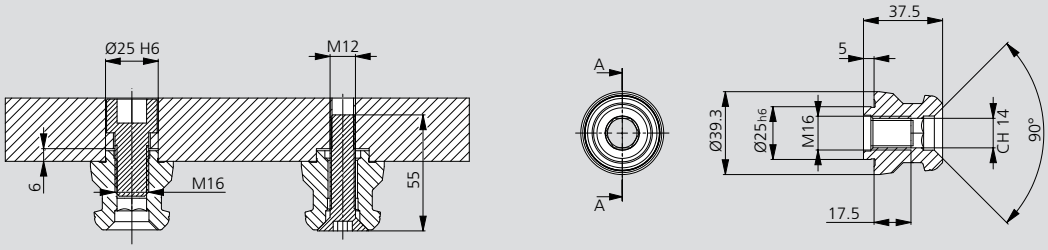

Subject to technical changes.

Id. No.	Type		Weight [kg]
46162455	A	M16	0.2
46162456	B	M16	0.2
46162457	C	M16	0.2

Pins type C floating

APS 140

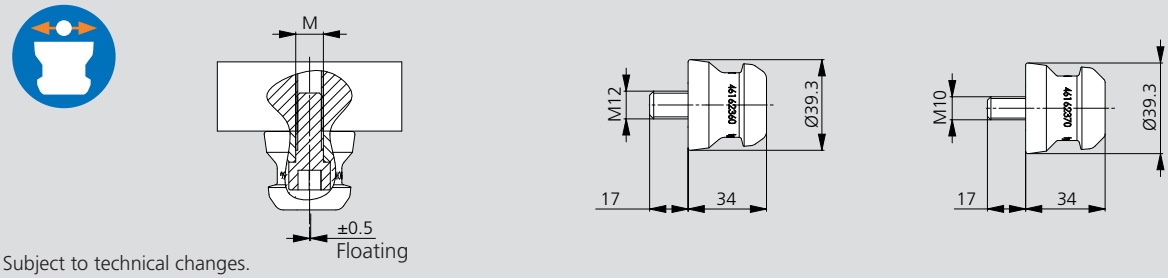

Subject to technical changes.

Id. No.	Type		Weight [kg]
46162370	C - Floating ± 0.5 mm	M10	0.2
46162360	C - Floating ± 0.5 mm	M12	0.2

APS 160 Pins - M16 thread

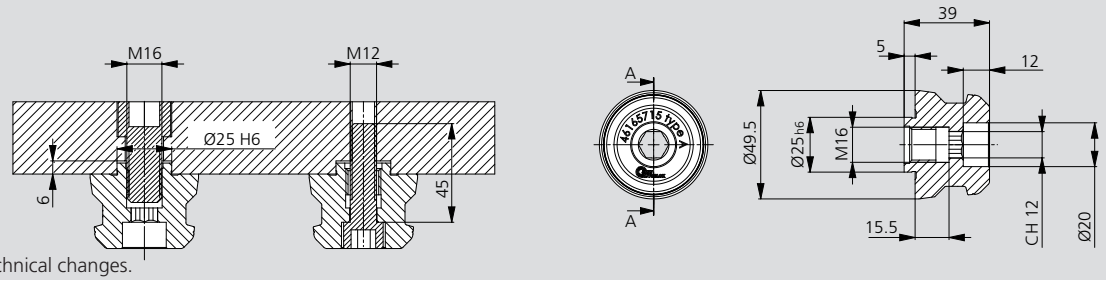

Subject to technical changes.

Id. No.	Type		Weight [kg]
46165715	A	M16	0.35
46165716	B	M16	0.35
46165717	C	M16	0.35

APS 160 Pins - D17 (for M16 screws 12.9)

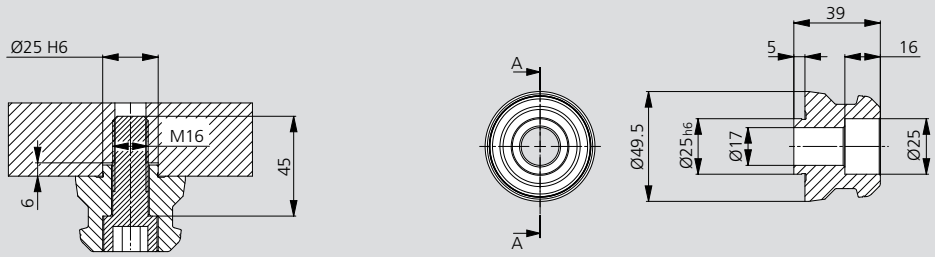

Subject to technical changes.

Id. No.	Type		Weight [kg]
46165705	A	D17	0.3
46165706	B	D17	0.3
46165707	C	D17	0.3

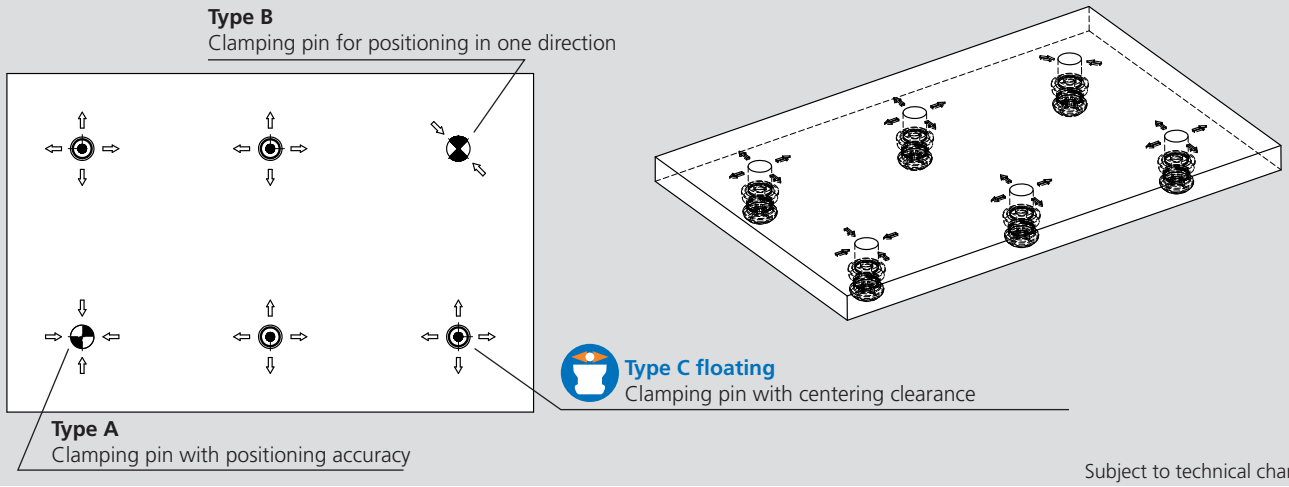

Subject to technical changes.

APS 160 Pins type C floating

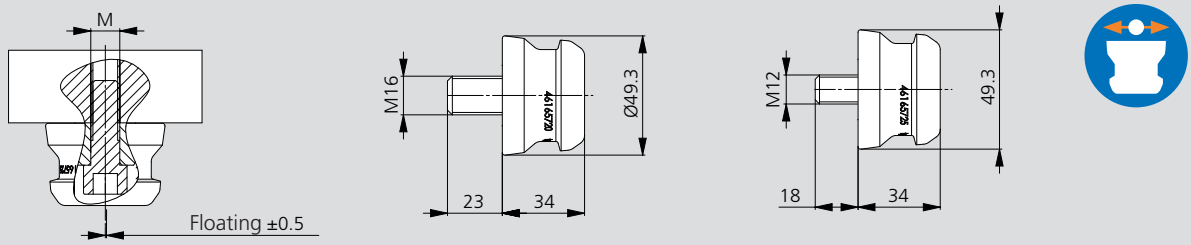

Subject to technical changes.

Id. No.	Type		Weight [kg]
46165720	C - Floating ± 0,5 mm	M16	0.4
46165725	C - Floating ± 0,5 mm	M12	0.35

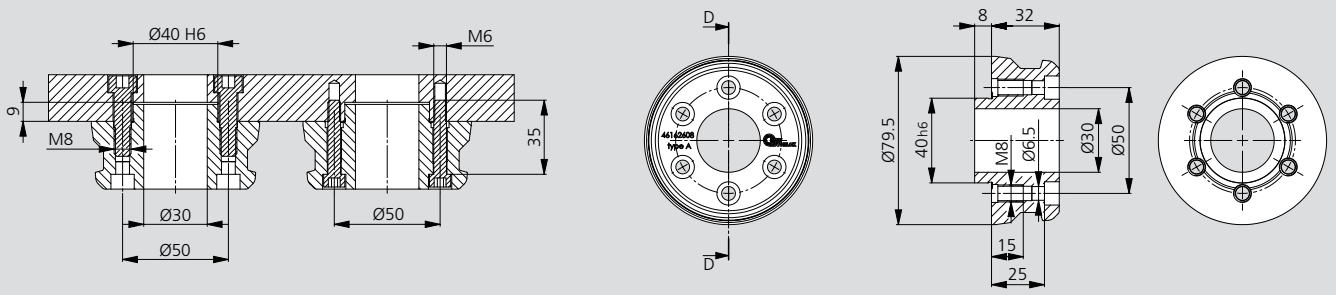

Subject to technical changes.

Id. No.	Type	Weight [kg]	Note
46162608	A	0.85	Pin with central hole Ø 30

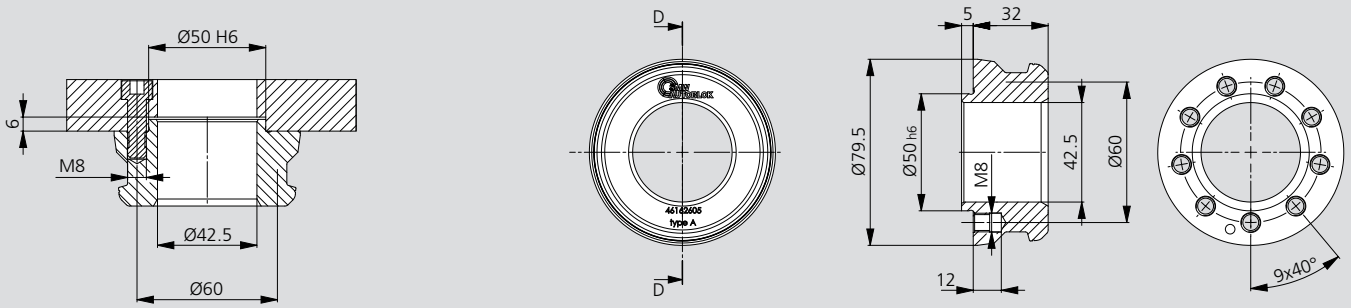

Subject to technical changes.

Id. No.	Type	Weight [kg]	Note
46162605	A	0.7	Pin with central hole Ø 42

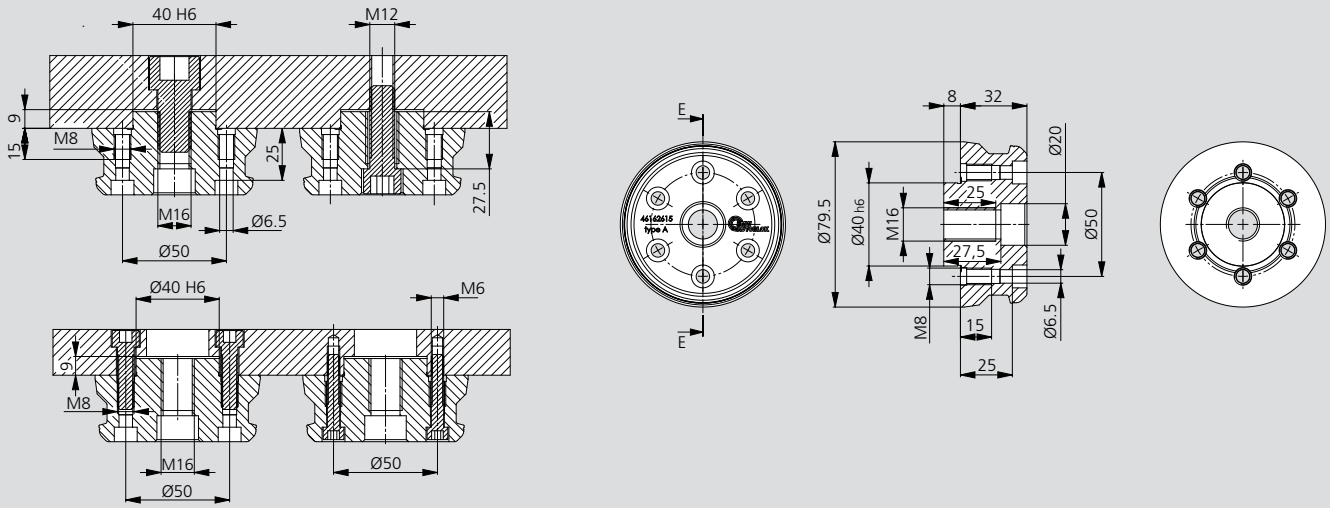

Subject to technical changes.

Id. No.	Type		Weight [kg]
46162615	A	M16	1
46162616	B	M16	1
46162617	C	M16	1

APS 190 Pins

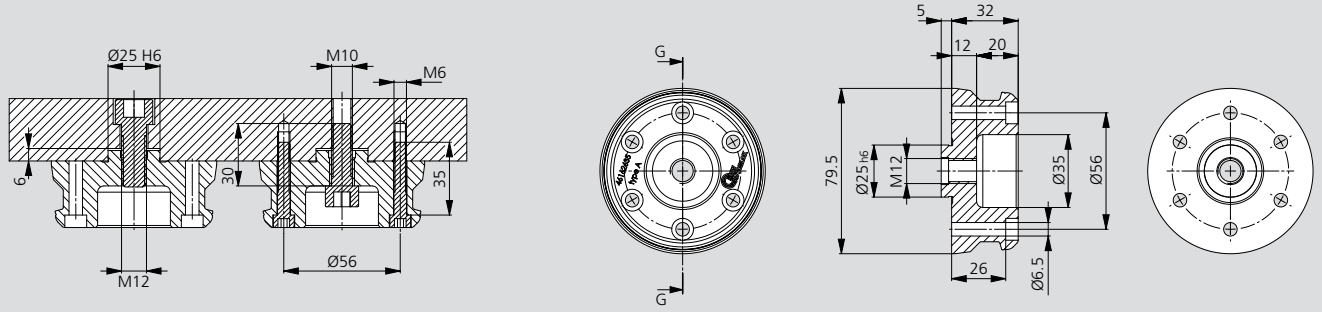

Subject to technical changes.

Id. No.	Type		Weight [kg]
46162635	A	Mounting pin = To the pin APS-140 M12	0.85

APS 250 Pins

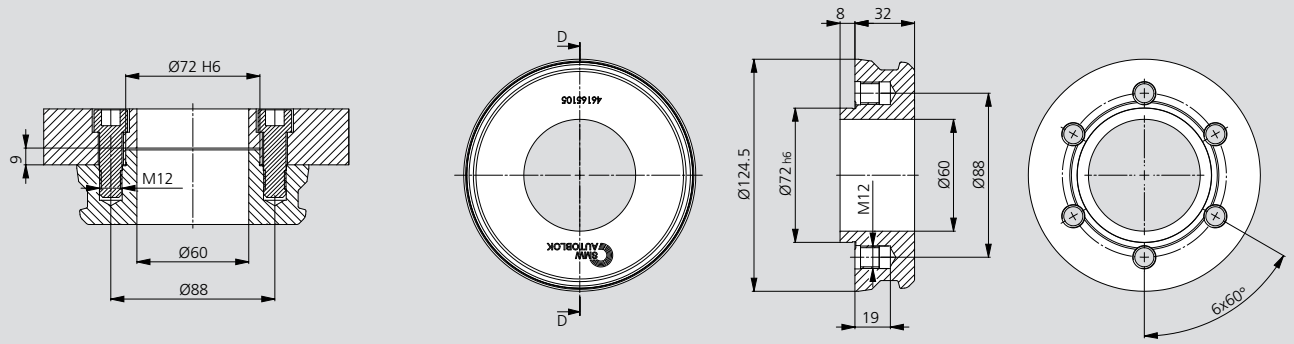

Subject to technical changes.

Id. No.	Type	Weight [kg]	Note
46165105	A	2	Pin with central hole Ø 60

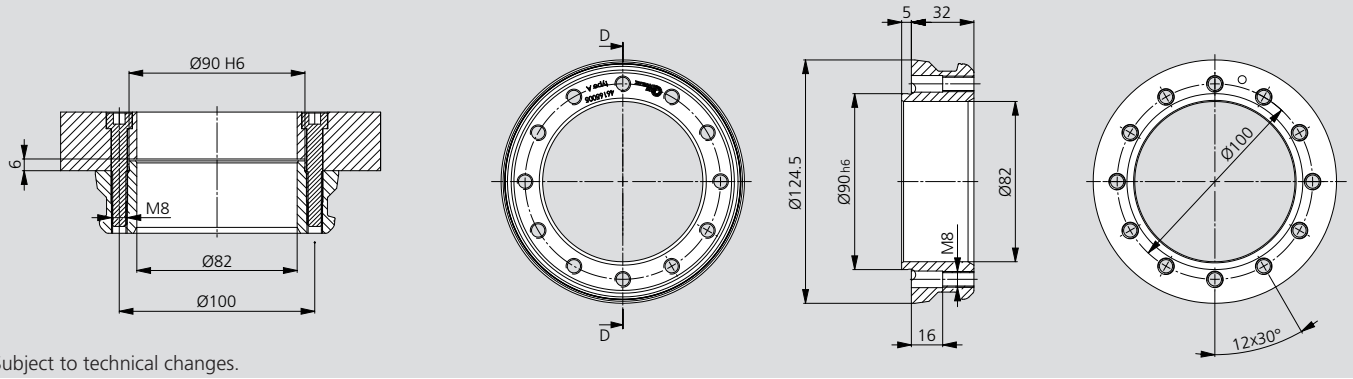

Subject to technical changes.

Id. No.	Type	Weight [kg]	Note
46165005	A	1.3	Pin with central hole Ø 82

Industry 4.0 Product

APS
Clamping unit fully assembled
Ready for use

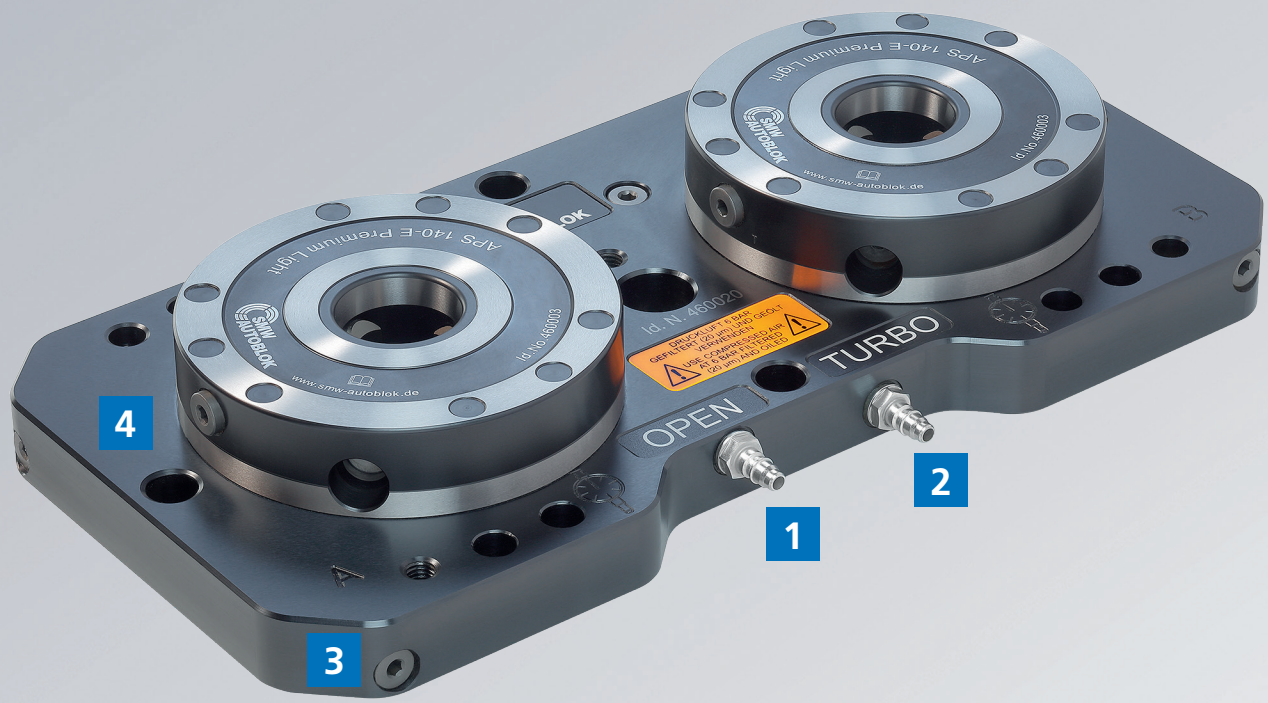

1 Functional overview of the APS clamping units

- Quick pneumatic connections **1**
- Turbo function for highest pull-down forces **2**
- Solid base plate (height 28 mm) for maximum stiftness at a total height of only 60 mm **3**
- Easy mounting on the machine table due to positioning holes **4**

APS 140

Clamping unit

Application/customer benefits

- Pre-assembled clamping unit with 2 pieces APS 140 E Premium Light or Basic
- Universal applicable
- Fast and easy set-up

Technical features

- 3 clamping slides (Basic: 2 clamping slides)
- Repeatability < 0.005 mm
- Turbo function for increasing the pull-down forces (pull-down force without Turbo 7.5 kN)
- Air cleaning (only Premium Light)
- Grid dimension 200 mm

Standard equipment

Clamping unit with 2 pieces APS 140 E Premium Light or Basic
Quick pneumatic connections

For clamping pallets please see page 52

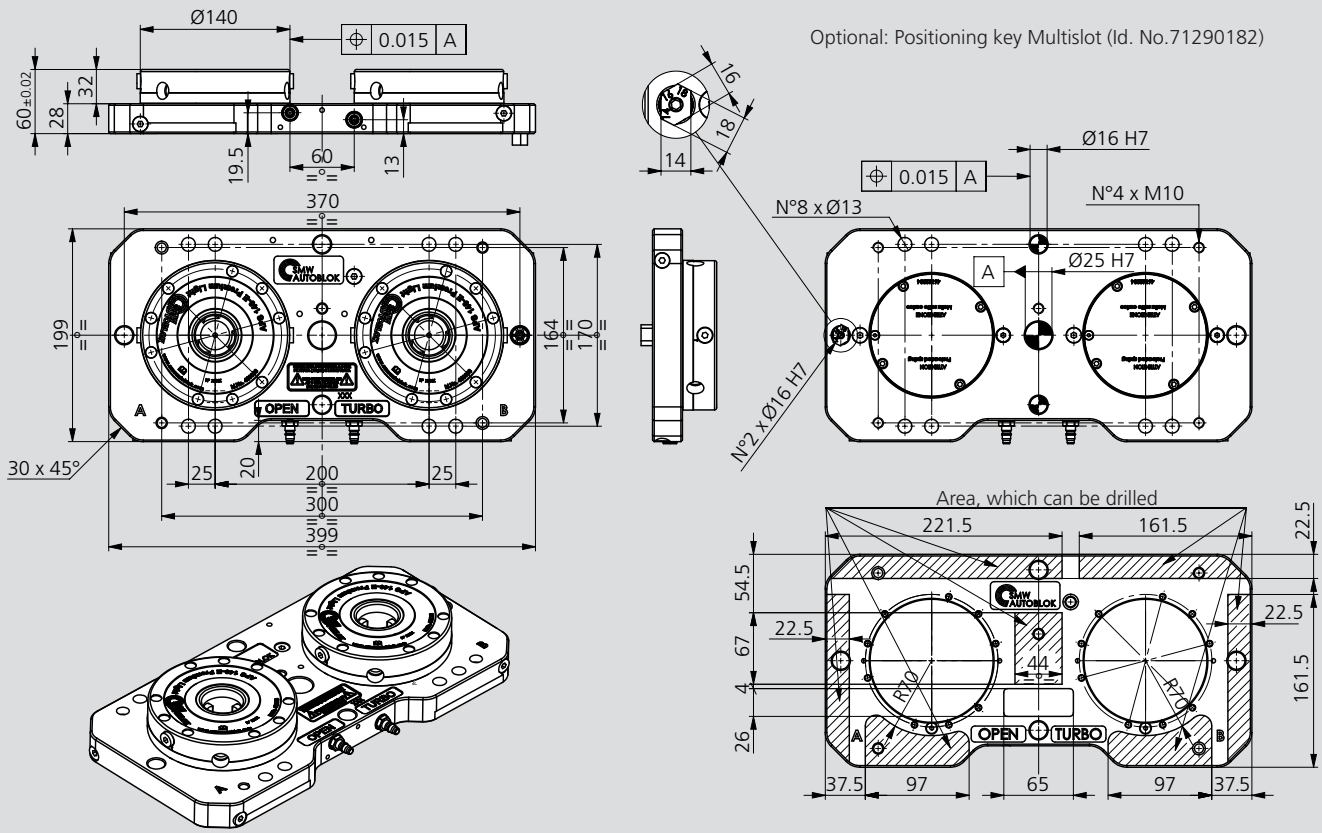

Subject to technical changes.

Order numbers

Type	Id. No.	Pull-down force with Turbo [kN]	Repeatability [mm]	Weight [kg]
Clamping unit with 2 APS 140 E Premium Light	460020	26*	< 0.005	21
Clamping unit with 2 APS 140 E Basic	460021	26*	< 0.005	21

* For each module.

APS 140

Application/customer benefits

- Pre-assembled clamping unit with 4 pieces APS 140 E Premium Light or Basic
- Universal applicable
- Fast and easy set-up
- Suitable for vertical machines

Technical features

- 3 clamping slides (Basic: 2 clamping slides)
- Repeatability < 0.005 mm
- Turbo function for increasing the pull-down forces (pull-down force without Turbo 7.5 kN)
- Air cleaning (only Premium Light)
- Grid dimension 200 mm

Standard equipment

Clamping unit with 4 pieces APS 140 E Premium Light or Basic
Quick pneumatic connections

For clamping pallets please see page 52

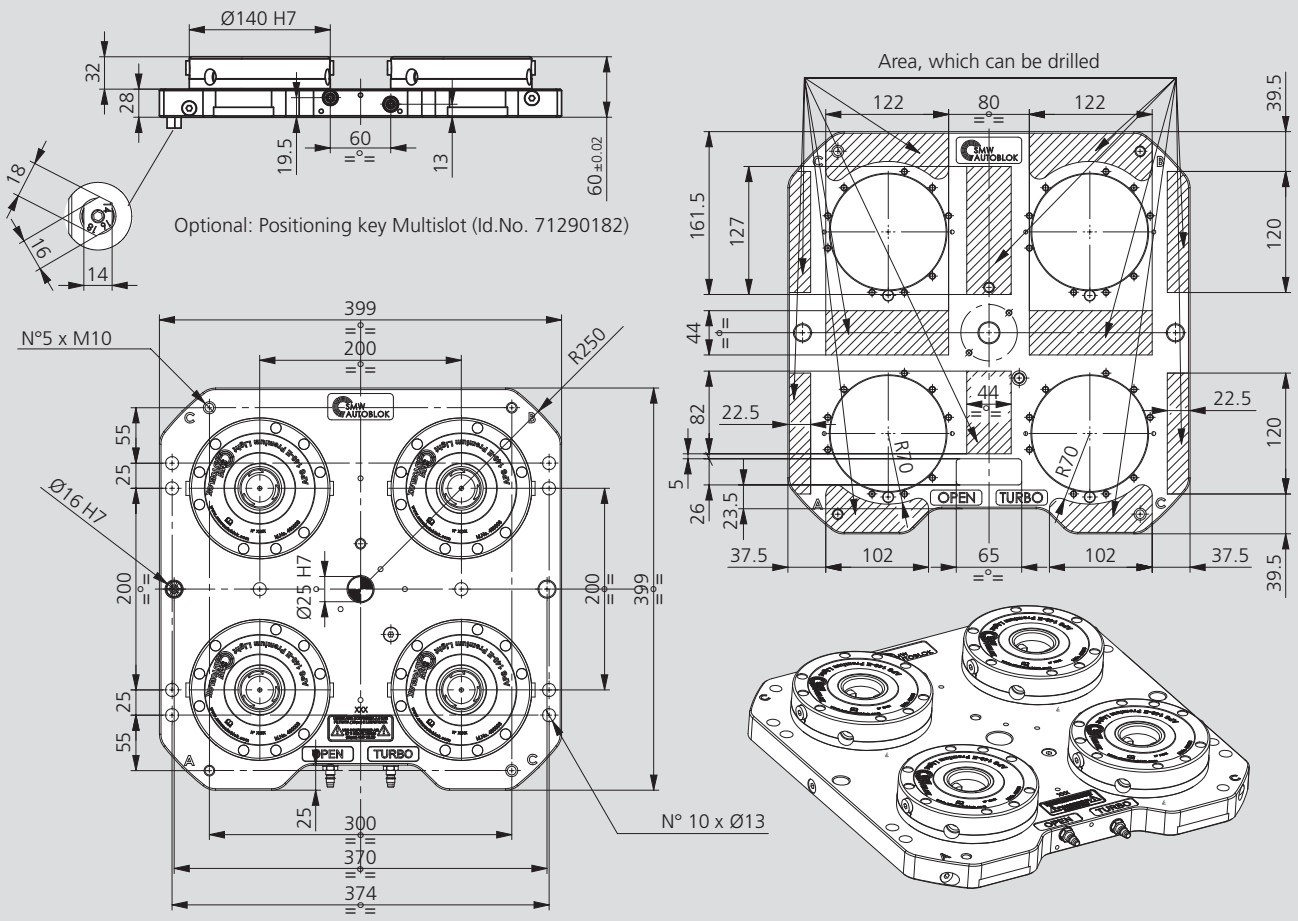

Subject to technical changes.

Order numbers

Type	Id. No.	Pull-down force with Turbo [kN]	Repeatability [mm]	Weight [kg]
Clamping unit with 4 APS 140 E Premium Light	460022	26*	< 0.005	41
Clamping unit with 4 APS 140 E Basic	460023	26*	< 0.005	41

* For each module.

APS 140

Clamping unit

■ Preferably for horizontal machining center

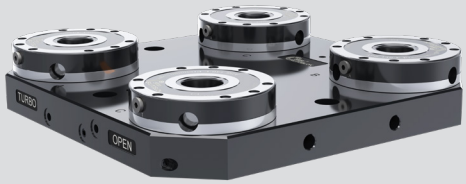

Application/customer benefits

- Pre-assembled clamping unit with 4 pieces APS 140 E Premium Light or Basic
- Suitable for standard machine pallets type JIS 6337-1980
- Universal applicable
- Fast and easy set-up

Technical features

- 3 clamping slides (Basic: 2 clamping slides)
- Repeatability < 0.005 mm
- Turbo function for increasing the pull-down forces (pull-down force without Turbo 7.5 kN)
- Air cleaning (only Premium Light)

Standard equipment

Clamping unit with 4 pieces APS 140 E Premium Light or Basic
Quick pneumatic connections

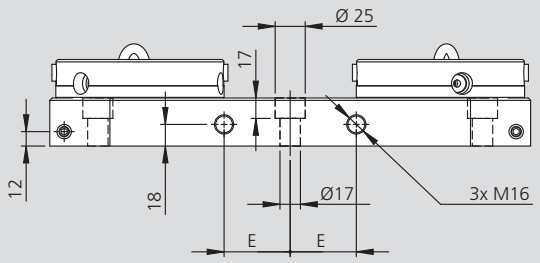

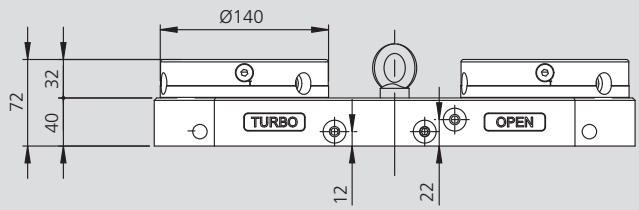

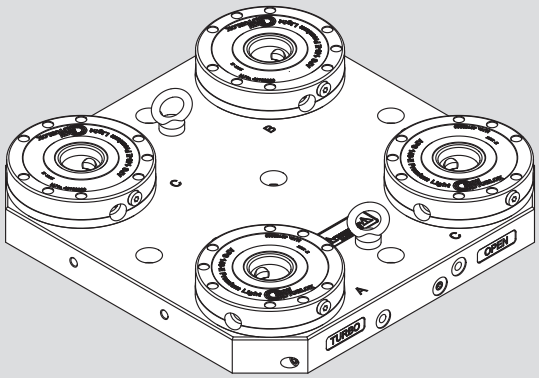

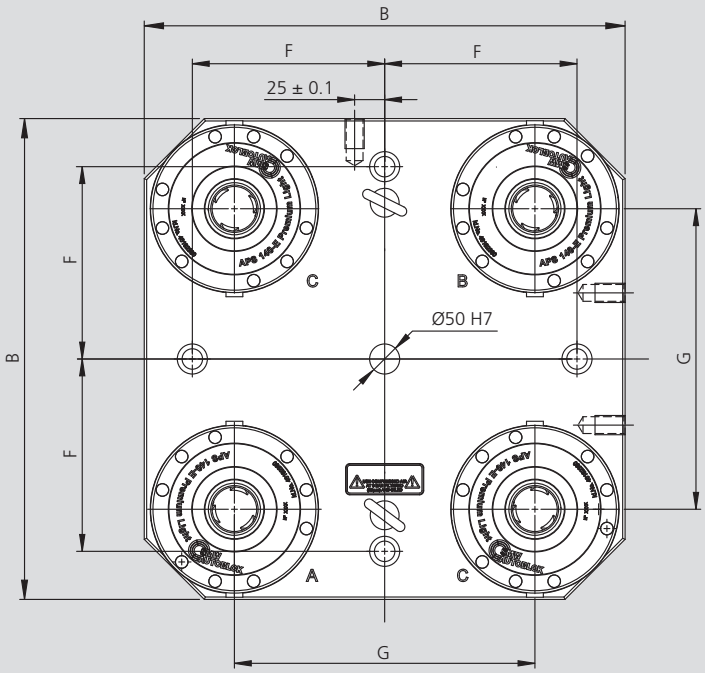

Subject to technical changes.

Order numbers

Type	Id. No.	B [mm]	E [mm]	F [mm]	G [mm]	Pull-down force with Turbo [kN]	Repeatability [mm]	Weight [kg]
Clamping unit with 4 APS 140 E Premium Light	46167040	400	55	160	250	26*	< 0.005	57
Clamping unit with 4 APS 140 E Basic	46167045	400	55	160	250	26*	< 0.005	57
Clamping unit with 4 APS 140 E Premium Light	46167050	500	75	200	300	26*	< 0.005	85
Clamping unit with 4 APS 140 E Basic	46167055	500	75	200	300	26*	< 0.005	85
Clamping unit with 4 APS 140 E Premium Light	46167060	630	100	250	420	26*	< 0.005	130
Clamping unit with 4 APS 140 E Basic	46167065	630	100	250	420	26*	< 0.005	130

* For each module.

Clamping unit

APS 140

- For 5-axis machining center
- Ready for the most common machine table T-slots centerline

Application/customer benefits

- Pre-assembled clamping unit with 4 pieces APS 140 E Premium Light or Basic
- For 5-axis machining center
- Universal applicable
- Fast and easy set-up

Technical features

- 3 clamping slides (Basic: 2 clamping slides)
- Repeatability < 0.005 mm
- Turbo function to increase the pull-down forces (pull-down force without Turbo 7.5 kN)
- Air cleaning (only Premium Light)

Standard equipment

Clamping unit with 4 pieces APS 140 E Premium Light or Basic
Quick pneumatic connections

For clamping pallets please see page 52

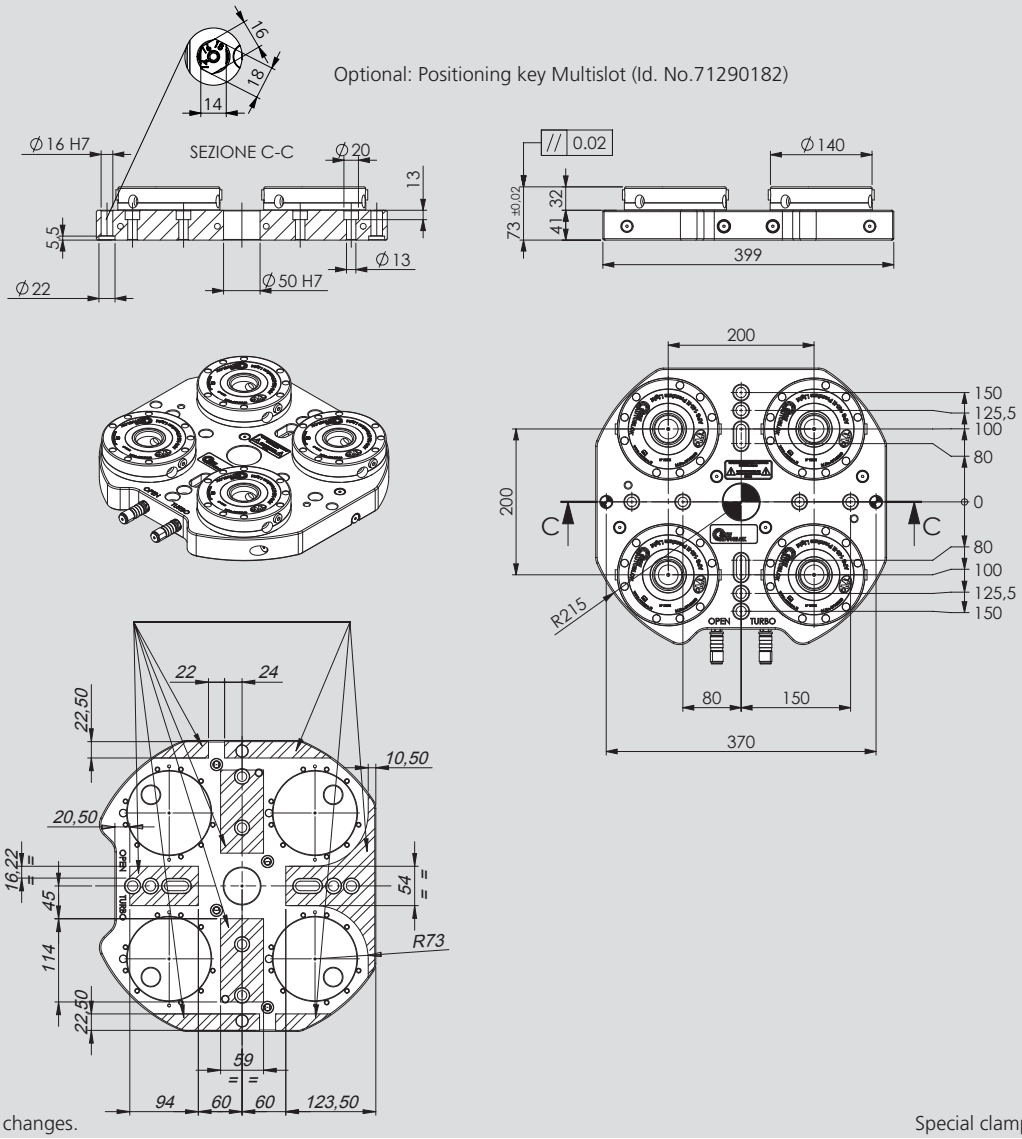

Subject to technical changes.

Special clamping units on request.

Order numbers

Type	Id. No.	Pull-down force with Turbo [kN]	Repeatability [mm]	Weight [kg]
Clamping unit with 4 APS 140 E Premium Light	46168020	26*	< 0.005	45
Clamping unit with 4 APS 140 E Basic	46168025	26*	< 0.005	45

* For each module.

APS 140

Clamping unit

- For 5-axis machining center
- Ready for the most common machine table T-slots centerline

Application/customer benefits

- Pre-assembled clamping unit with 5 pieces APS 140 E Premium Light or Basic
- For 5-axis machining center
- Universal applicable
- Fast and easy set-up
- Specifically designed for Rotary Tables and small 5-axis machines

Technical features

- 3 clamping slides (Basic: 2 clamping slides)
- Repeatability < 0.005 mm
- Turbo function to increase the pull-down forces (pull-down force without Turbo 7.5 kN)
- Air cleaning (only Premium Light)
- Grid dimension 250 mm

Standard equipment

Clamping unit with 5 pieces APS 140 E Premium Light or Basic
Quick pneumatic connections
For clamping pallets please see page 52

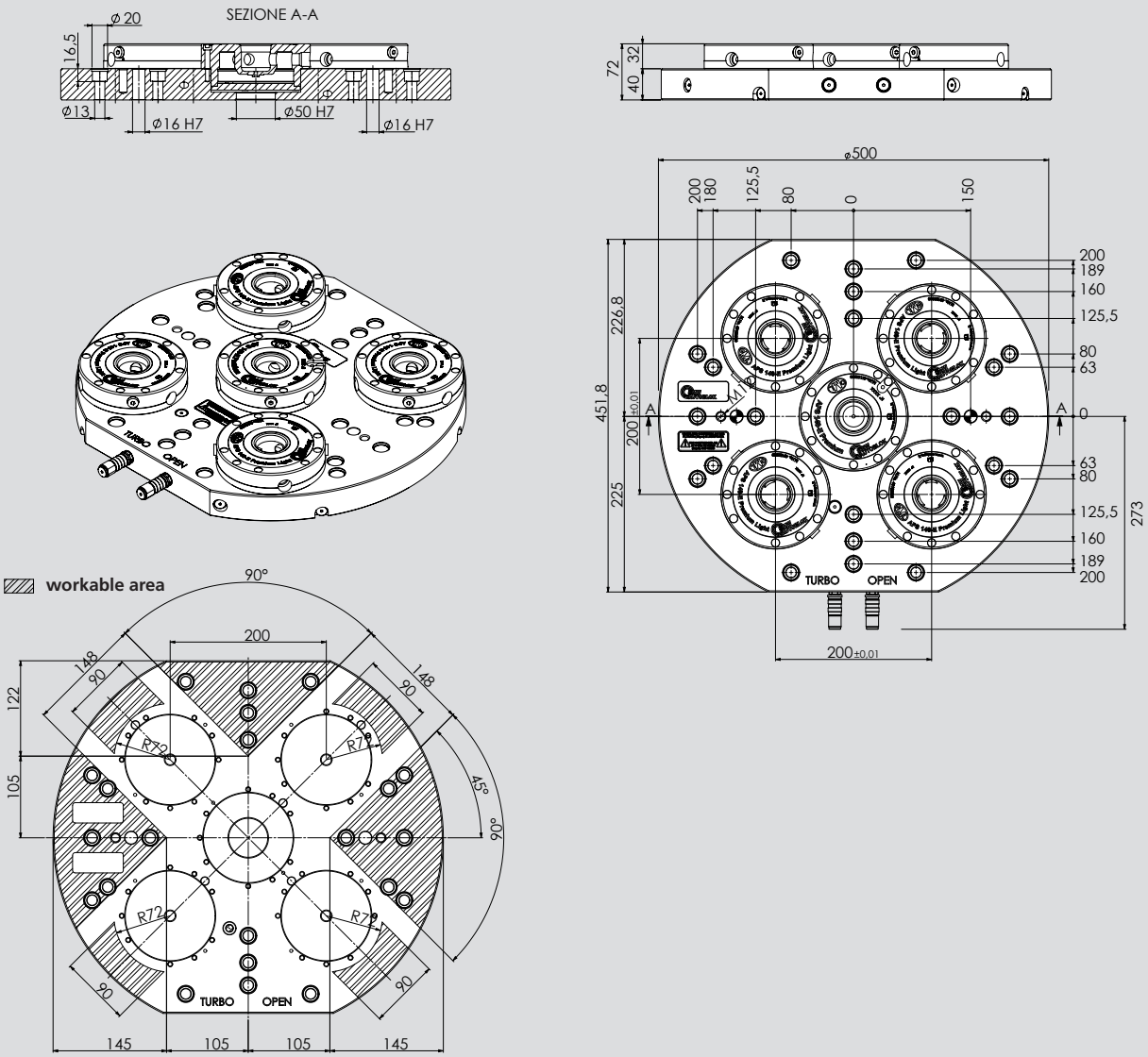

Subject to technical changes.

Special clamping units on request.

Order numbers

Type	Id. No.	Pull-down force with Turbo [kN]	Repeatability [mm]	Weight [kg]
Clamping unit with 5 APS 140 E Premium Light	46168030	26*	< 0.005	68
Clamping unit with 5 APS 140 E Basic	46168035	26*	< 0.005	67

* For each module.

APS 140

Application/customer benefits

- Pre-assembled clamping unit with 6 pieces APS 140 E Premium Light or Basic
- Universal applicable
- Fast and easy set-up

Technical features

- 3 clamping slides (Basic: 2 clamping slides)
- Repeatability < 0.005 mm
- Turbo function for increasing the pull-down forces (pull-down force without Turbo 7.5 kN)
- Air cleaning (only Premium Light)
- Grid dimension 200 mm

Standard equipment

Clamping unit with 6 pieces APS 140 E Premium Light or Basic
Quick pneumatic connections

For clamping pallets please see page 52

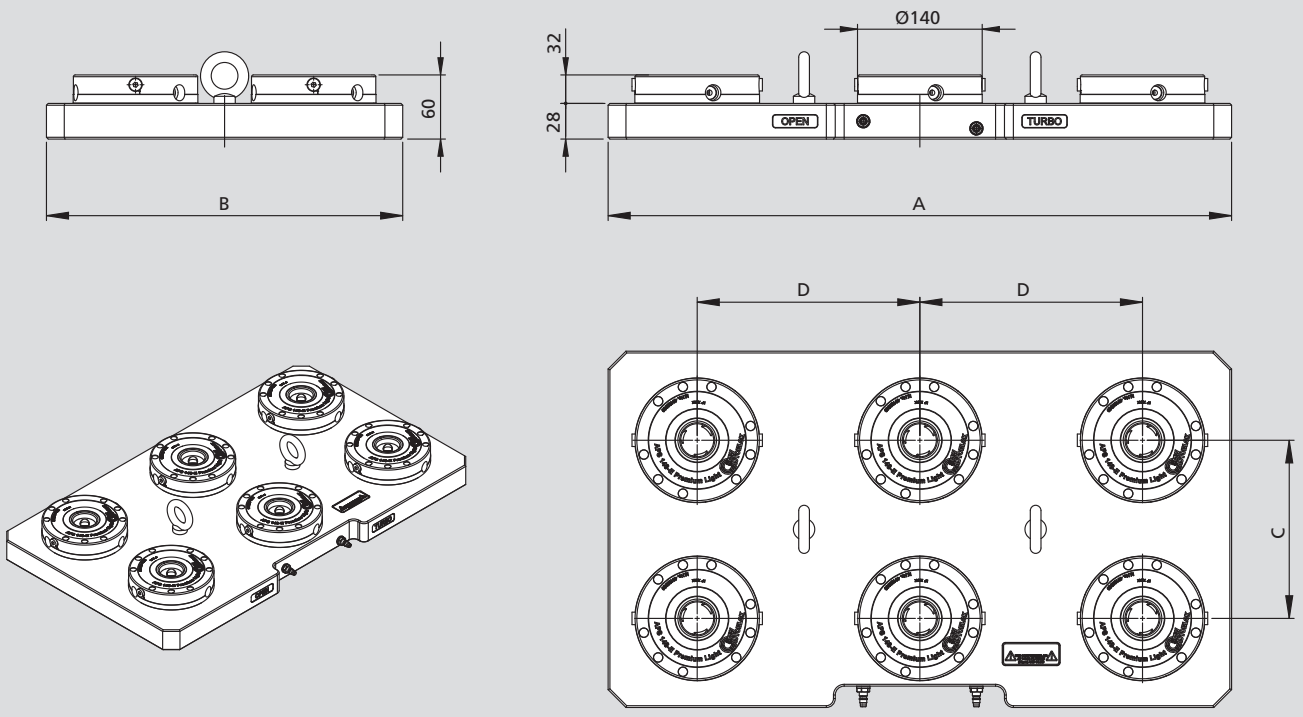

Subject to technical changes.

Special clamping units on request.

Order numbers

Type	Id. No.	A [mm]	B [mm]	C [mm]	D [mm]	Pull-down force with Turbo [kN]	Repeatability [mm]	Weight [kg]
Clamping unit with 6 APS 140 E Premium Light	46168110	600	400	200	200	26*	< 0.005	83
Clamping unit with 6 APS 140 E Basic	46168115	600	400	200	200	26*	< 0.005	84

* For each module.

APS 140 E

Media feed 3-axis zero feedings

■ For plate with 2 APS 140 E

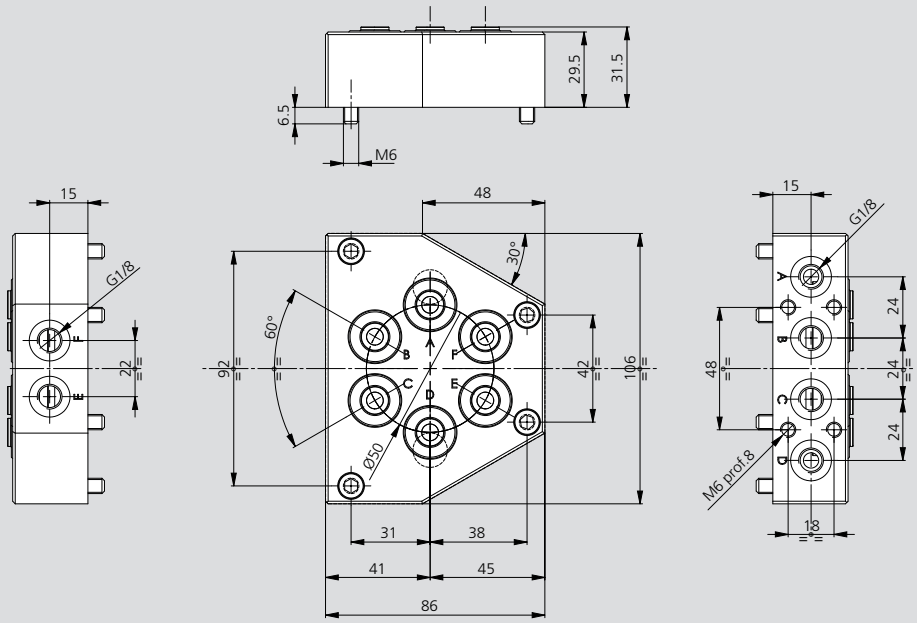

Subject to technical changes.

Example

460020
460021

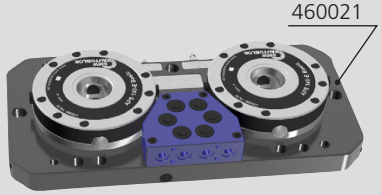

Media feed for plate with 2 APS 140	Id. No.	Possible feedings	Weight [kg]
Kit SUPP-2 INN on plate with 2 APS 140 3-axis	46202040	A-D	1.6
Kit SUPP-4 INN on plate with 2 APS 140 3-axis	46202032	A-B-C-D	1.6
Kit SUPP-6 INN on plate with 2 APS 140 3-axis	46202033	A-B-C-D-E-F	1.6

APS 140 E

Media feed 3-axis zero feedings

■ For plate with 4 APS 140 E

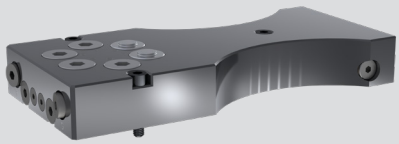

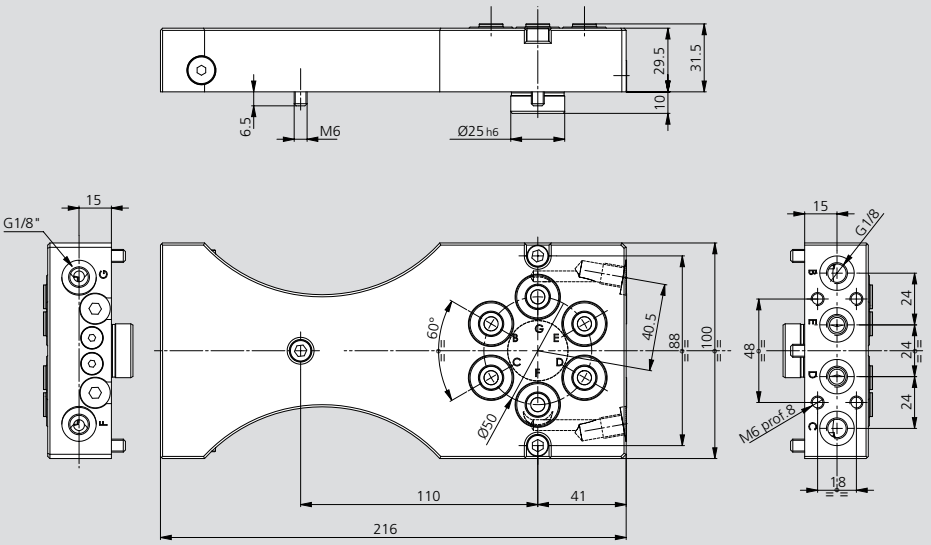

Subject to technical changes.

Example

460022
460023

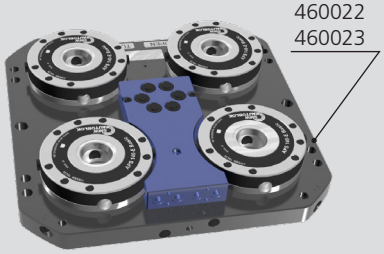

Media feed for plate with 4 APS 140	Id. No.	Possible feedings	Weight [kg]
Kit SUPP-2 INN on plate with 4 APS 140 3-axis	46202039	B-C	3.8
Kit SUPP-4 INN on plate with 4 APS 140 3-axis	46202028	B-C-D-E	3.8
Kit SUPP-6 INN on plate with 4 APS 140 3-axis	46202029	B-C-D-E-F-G	3.8

Module height extension with APS 140 E PREMIUM SC

APS 140

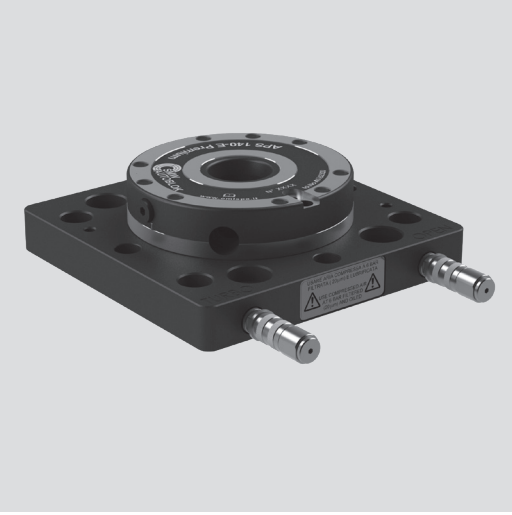

Application/customer benefits

- Pre-assembled clamping unit with 1 piece APS 140 E Premium SC
- Universal applicable
- Fast and easy set-up

Technical features

- 3 clamping slides
- Repeatability < 0.005 mm
- Turbo function to increase the pull-down forces
- Anti rotating protection
- Air cleaning

Standard equipment

Module height extension with 1 piece APS 140 E Premium SC
Quick pneumatic connections

For clamping pallets please see page 52

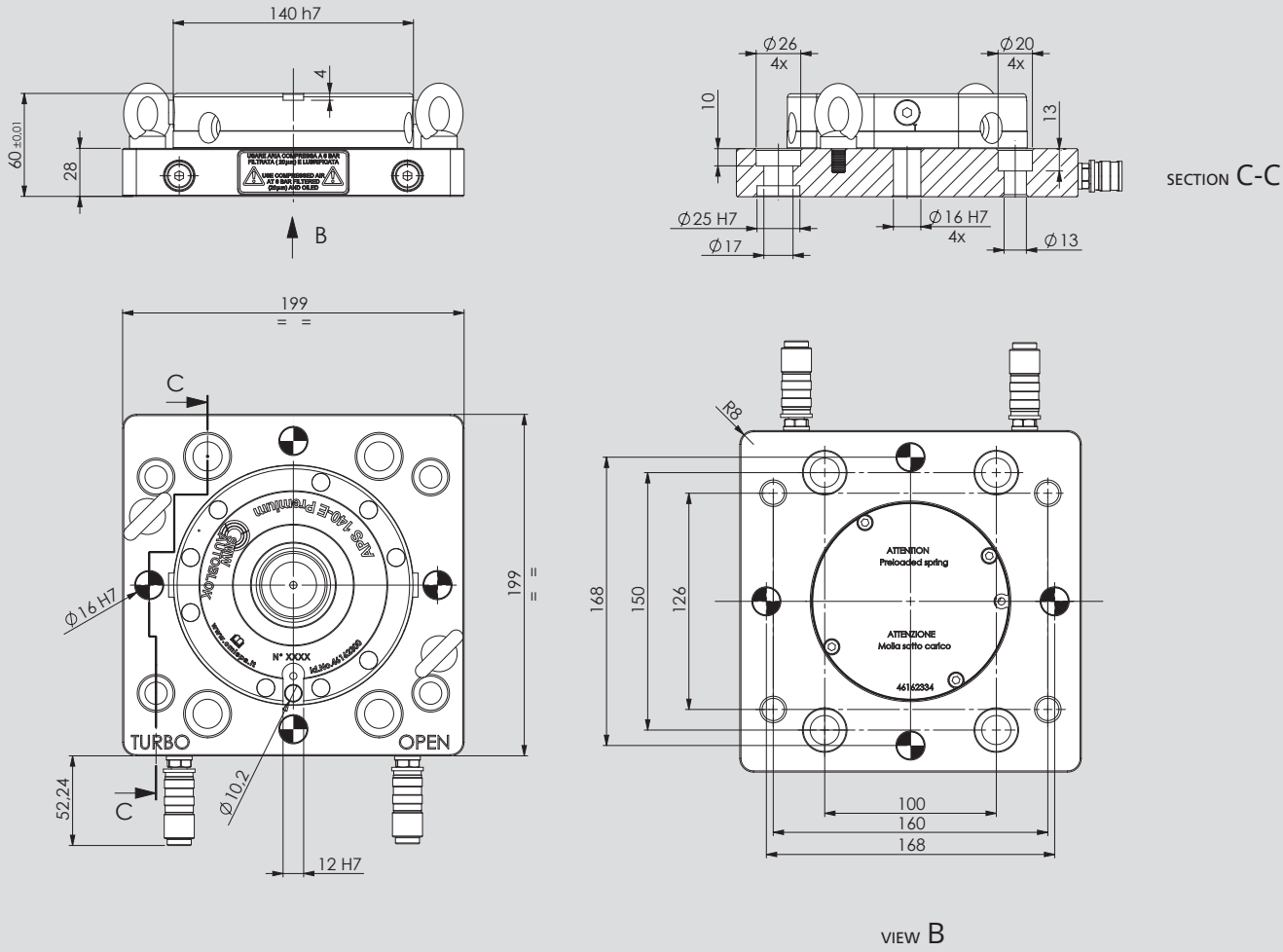

Subject to technical changes.

Order numbers

Type	Id. No.	Height [mm]	Weight [kg]
Module extention with 1 APS 140 E Premium SC	46168260	60	11

APS 100

Module height extension with APS 100 E PREMIUM

■ Specifically designed for Rotary Tables and small 5-axis machines

Application/customer benefits

- Pre-assembled module extension unit with 1 piece APS 100 E Premium
- Universal applicable
- Fast and easy set-up

Technical features

- 2 clamping slides
- Repeatability < 0.005 mm
- Turbo function for increasing the pull-down forces
- Anti rotating key-seat
- Air cleaning

Standard equipment

Module height extension with 1 piece APS 100 E Premium

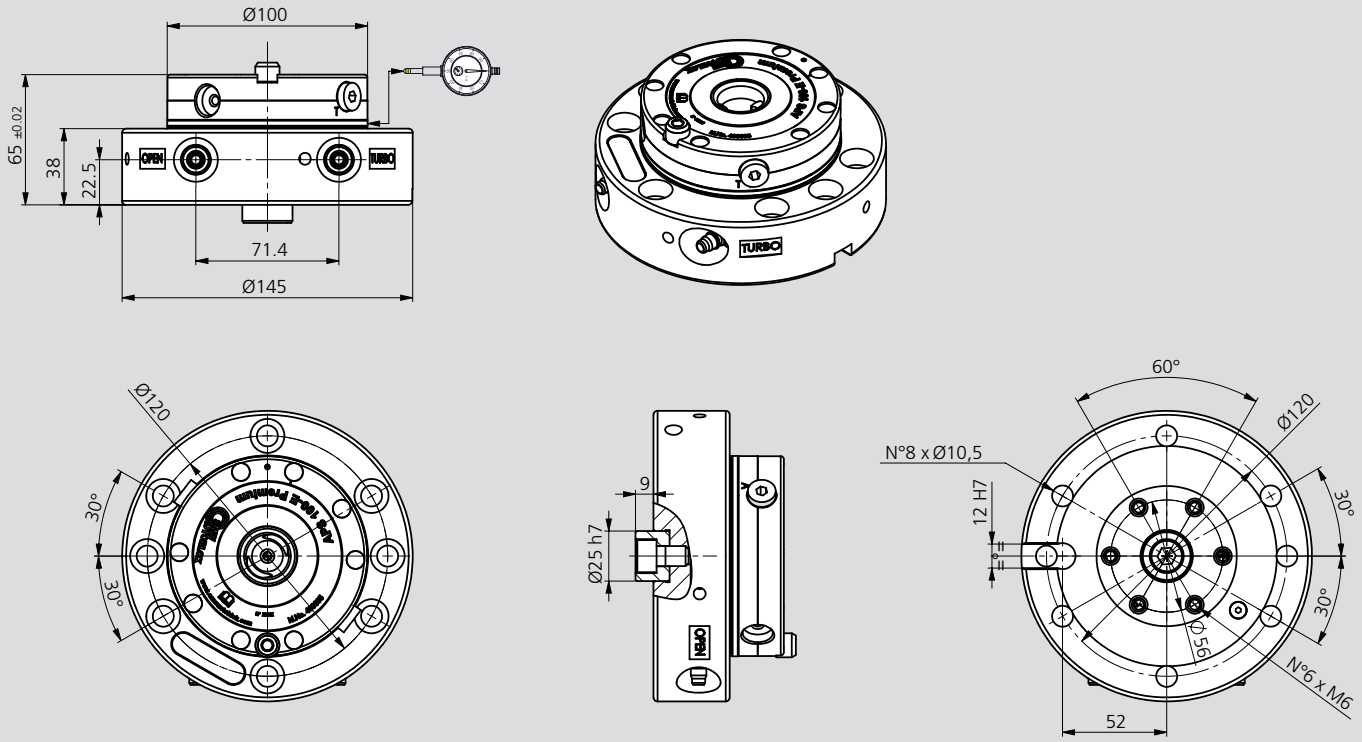

Subject to technical changes.

Order numbers

Type	Id. No.	Height [mm]	Weight [kg]
Module extension APS 100 E Premium H65	460110	65	6

Note 1: For every unit the key (Id. No. 46162133) is included
Note 2: Optional T-nuts sets: 46204100 with T-slot 12 / 46204101 with T-slot 14 / 46204102 with T-slot 18. Drawings and shares of these sets.
Note 3: Mountable also on APS 140.
Note 4: When using the module in rotation (r.p.m. 200-1000) request balancing (listed separately).
Note 5: The module extension is equipped with radial screws for the fine centering of the APS.

Module height extension with APS 140 E PREMIUM SC

APS 140

■ Specifically designed for Rotary Tables and small 5-axis machines

Application/customer benefits

- Pre-assembled clamping unit with 1 piece APS 140 E Premium SC
- Universal applicable
- Fast and easy set-up

Technical features

- 3 clamping slides
- Repeatability < 0.005 mm
- Turbo function to increase the pull-down forces
- Anti rotating protection
- Air cleaning

Standard equipment

Module height extension with 1 piece APS 140 E Premium SC

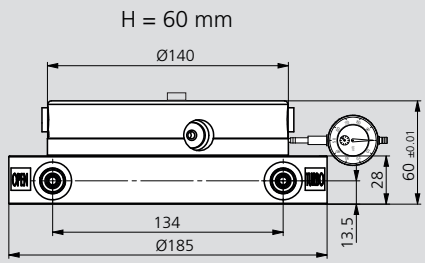

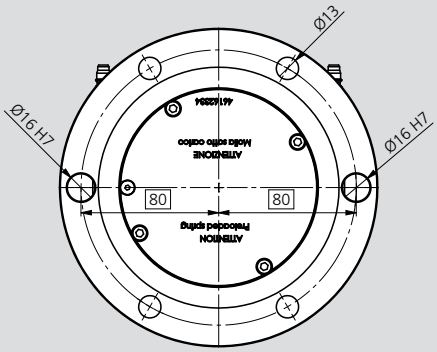

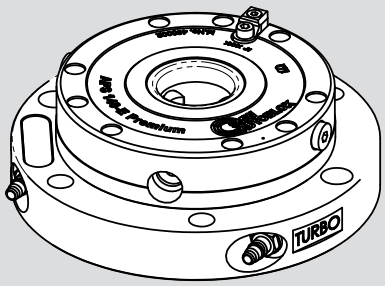

Subject to technical changes.

Order numbers

Type	Id. No.	Height [mm]	Weight [kg]
Module extension APS 140 E Premium SC H60	460112	60	8

Note 1: For every unit the key (Id. No. 46162333) is included.
Note 2: For the pair of clamps please see accessories APS on page 65.

APS 140

Module height extension for indexing tables

Application/customer benefits

- Module height extension for indexing tables and CNC indexing tables with T-slots flange

Technical features

- 3 clamping slides
- Repeatability < 0.005 mm
- Turbo function to increase the pull-down forces
- Anti rotation key-seat
- Air sensing
- Air cleaning
- Fully sealed (proofline)

Standard equipment

Module height extension with 1 APS 140 E Premium SC modul for indexing tables and for orientation on indexing tables with T-slots

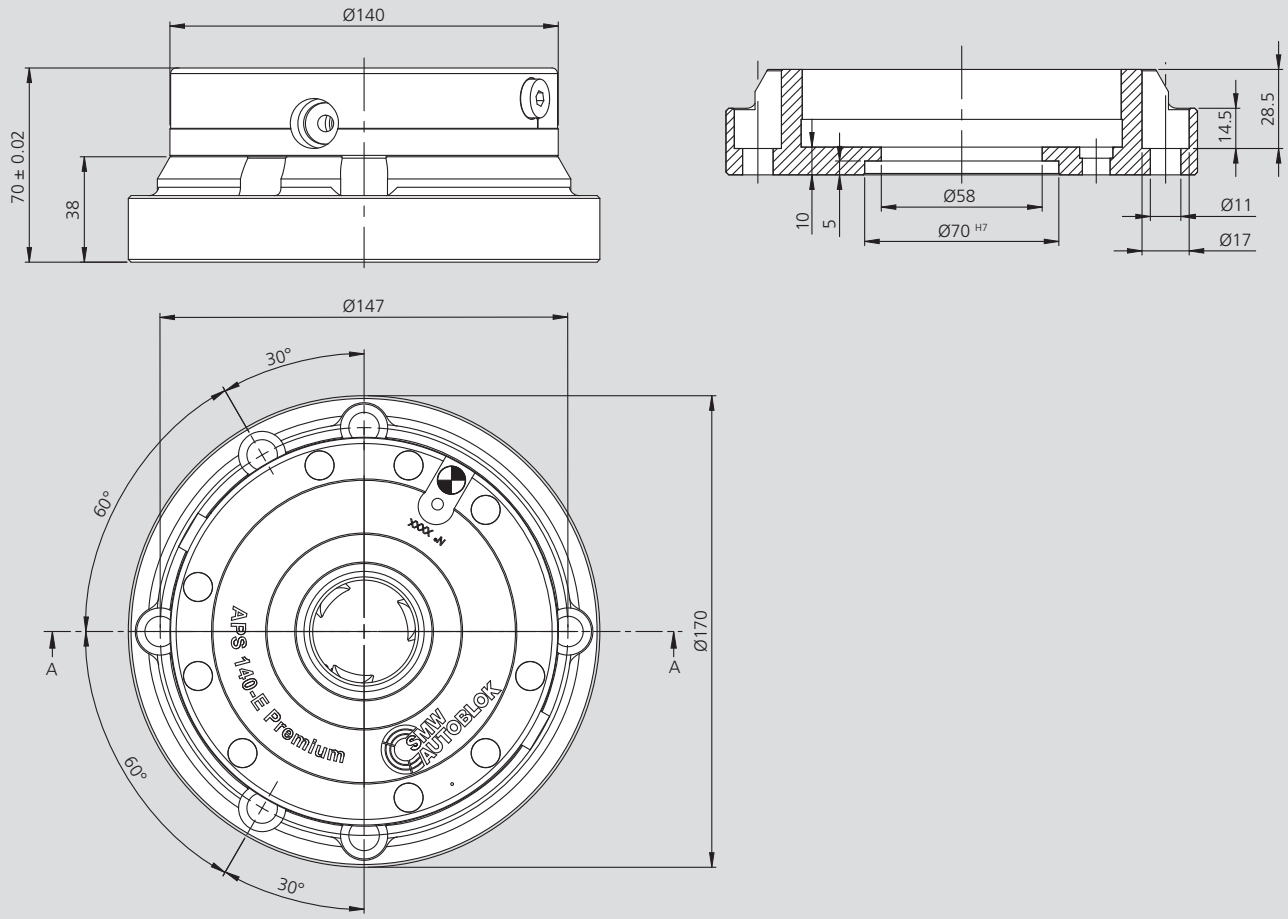

Subject to technical changes.

Order numbers

Type	Id. No.	Height [mm]	Weight [kg]
Module height extension with APS 140 E Premium SC	46167620	70	17

Module height extension with APS 140 E PREMIUM SC

APS 140

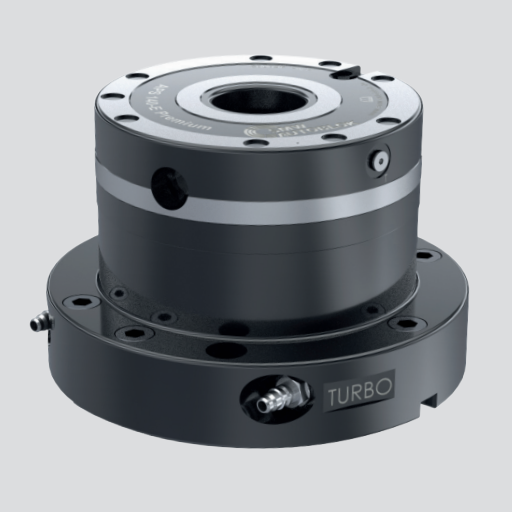

Application/customer benefits

- Pre-assembled module extension unit with 1 piece APS 140 E Premium SC
- Universal applicable
- Fast and easy set-up

Technical features

- 3 clamping slides
- Repeatability < 0.005 mm
- Turbo function to increase the pull-down forces
- Anti rotating protection
- Air cleaning

Standard equipment

Module height extension with 1 piece APS 140 E Premium SC

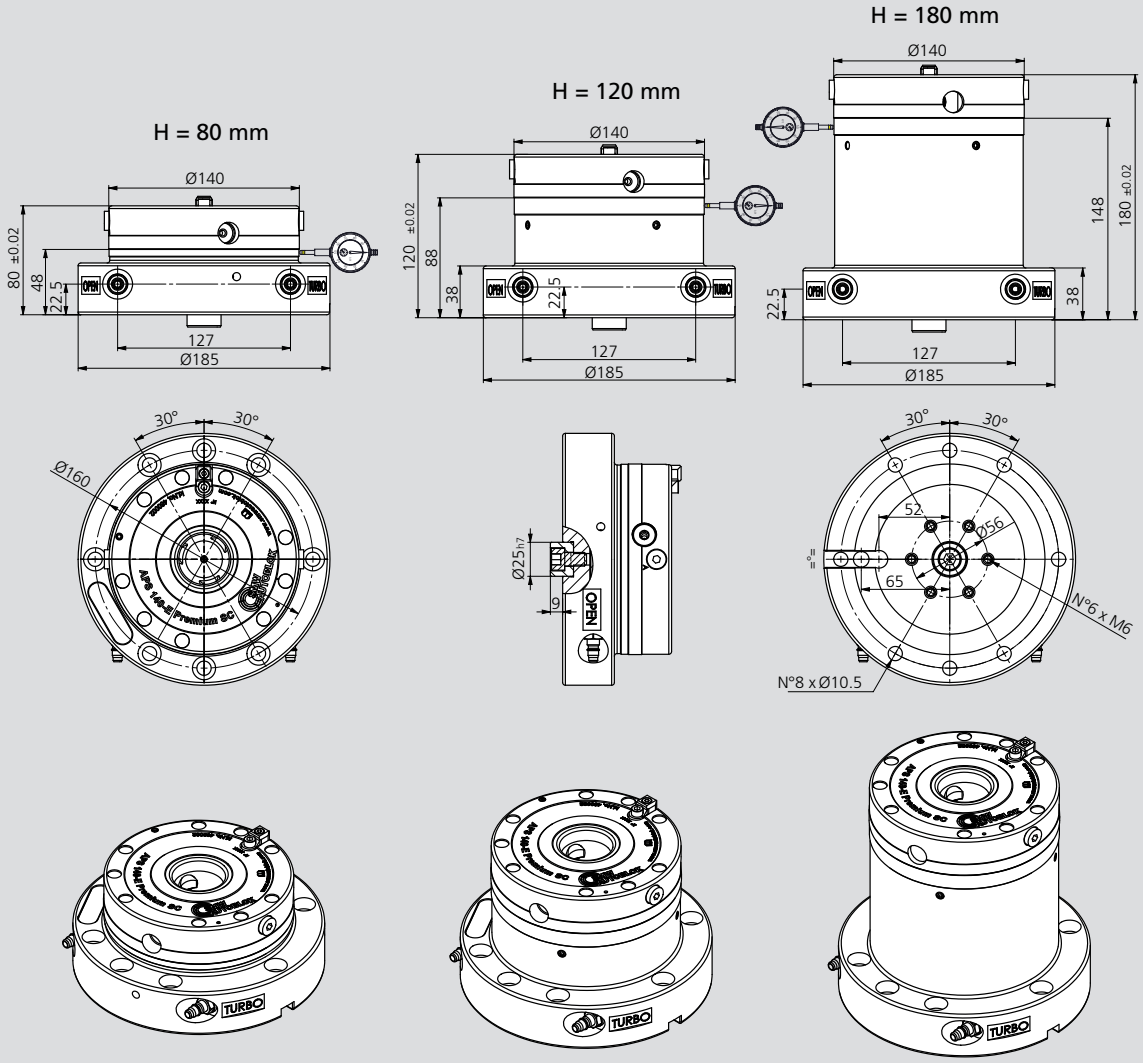

Subject to technical changes.

Type	Id. No.	Height [mm]	Weight [kg]
Module extension APS 140 E Premium SC H80	460113	80	11
Module extension APS 140 E Premium SC H120	460114	120	14
Module extension APS 140 E Premium SC H180	460115	180	18

Note 1: For every unit the key (Id. No. 46162133) is included
Note 2: Optional T-nuts sets: 46204100 with T-slot 12 / 46204101 with T-slot 14 / 46204102 with T-slot 18. Drawings and shares of these sets.
Note 3: Mountable also on APS 190 and APS 140.
Note 4: When use the module in rotation (200-1000 r.p.m.) request balancing (listed separately).
Note 5: The module extension is equipped with radial screws for the fine centering of the APS.

APS 190

Module height extension with APS 190 E PREMIUM SC

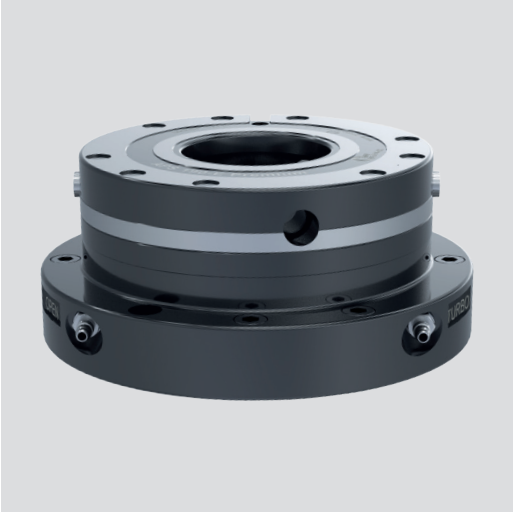

Application/customer benefits

- Pre-assembled module extension unit with 1 piece APS 190 E Premium SC
- Universal applicable
- Fast and easy set-up

Technical features

- 3 clamping slides
- Repeatability < 0.005 mm
- Turbo function to increase the pull-down forces
- Anti rotating protection
- Air cleaning

Standard equipment

Module height extension with 1 piece APS 190 E Premium SC

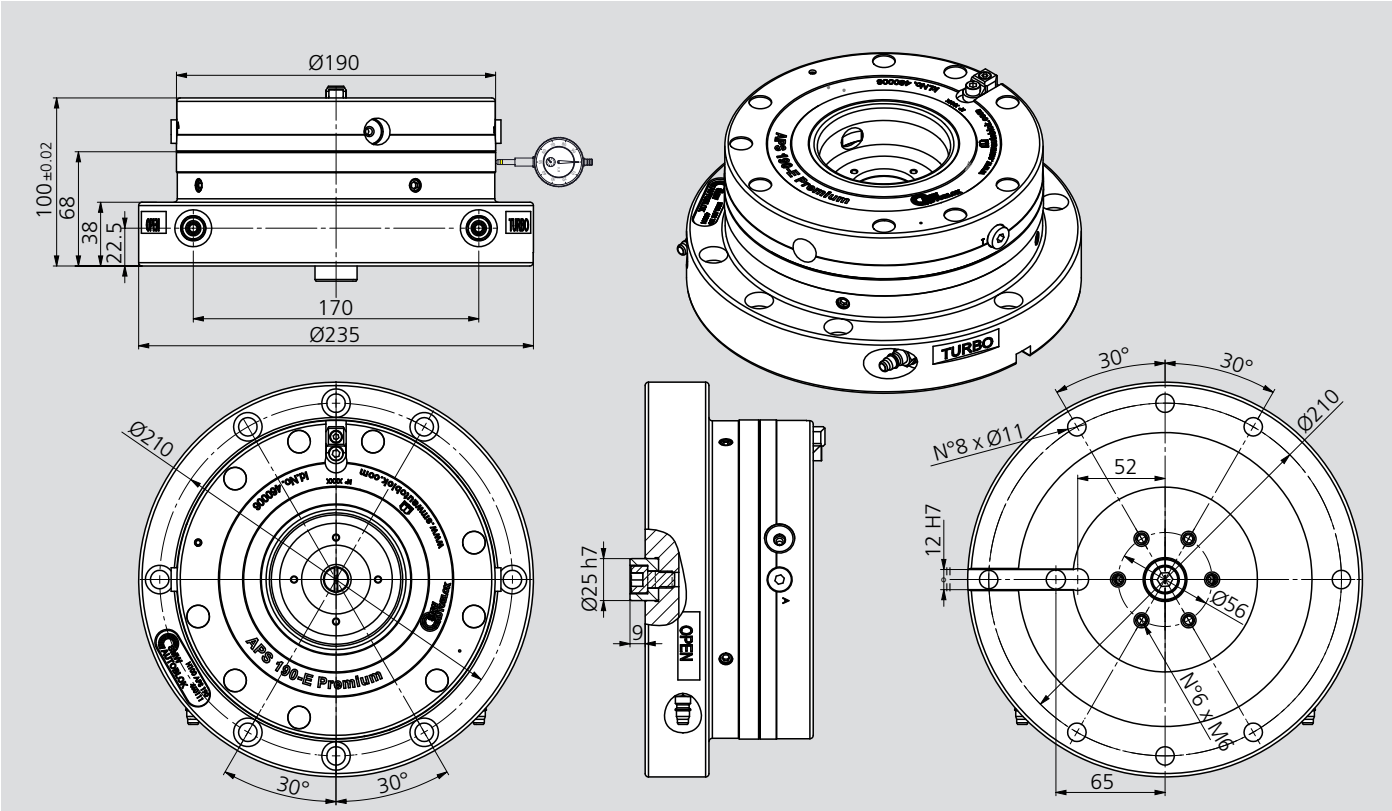

Subject to technical changes.

Order numbers

Type	Id. No.	Height [mm]	Weight [kg]
Module extension APS 190 E PREMIUM SC H100	460111	100	20.5

Note 1: For every unit the key (Id. No. 46162133) is included
Note 2: Optional T-nuts sets: 46204100 with T-slot 12 / 46204101 with T-slot 14 / 46204102 with T-slot 18. Drawings and shares of these sets.
Note 3: Mountable also on APS 190 and APS 140.
Note 4: When use the module in rotation (200-1000 r.p.m.) request balancing (listed separately).
Note 5: The module extension is equipped with radial screws for the fine centering of the APS.

Industry 4.0
Product

APS
Clamping units
for vertical turning lathes

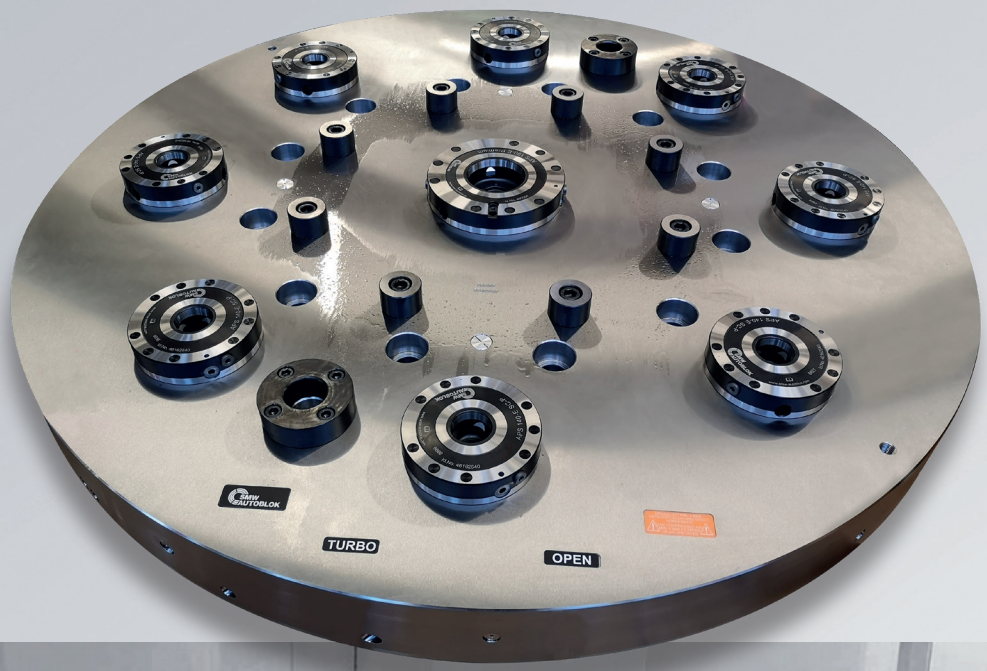

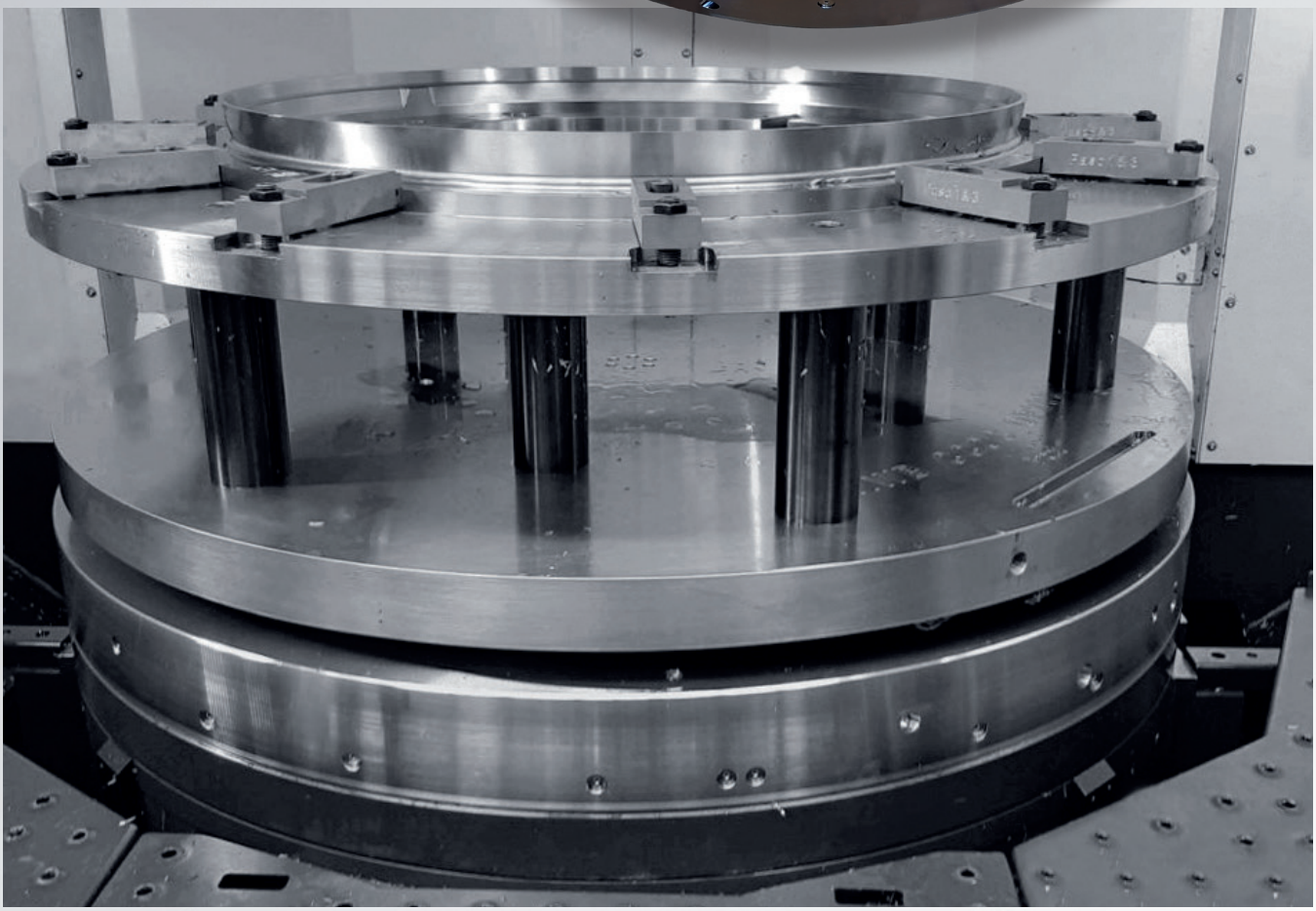

APS 190 - 140

Clamping unit

■ For vertical turning lathes

Application/customer benefits

- Pre-assembled clamping unit with APS 190 E Premium SC and APS 140 Premium Light
- For vertical turning machining center
- Universal applicable with ASA flanges or directly on the spindle nose
- Fast and easy set-up

Technical features

- 3 clamping slides
- Repeatability < 0.005 mm
- Turbo function to increase the pull-down forces
  (pull-down force without Turbo 13.5 kN for APS 190 and 7.5 kN for APS 140)
- Visual control for open and turbo
- Air cleaning

Standard equipment

Clamping unit with APS 190 E Premium SC and APS 140 E Premium Light
ASA flange not included

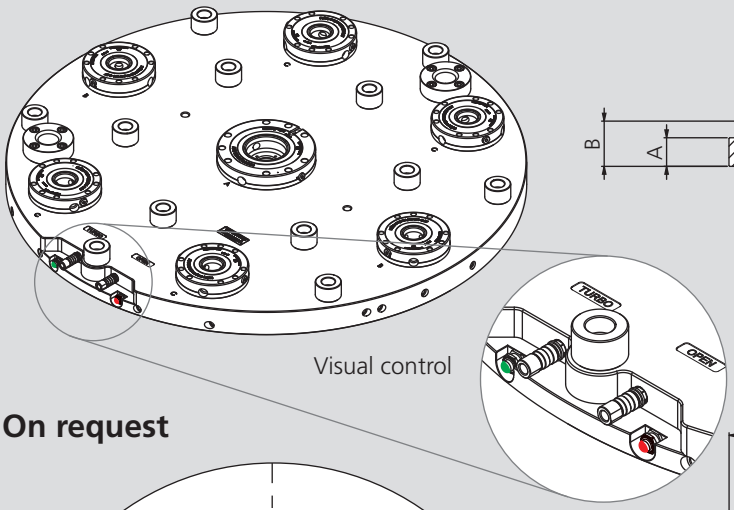

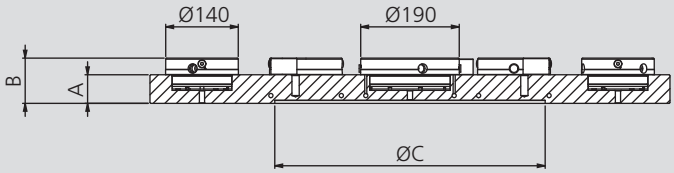

On request

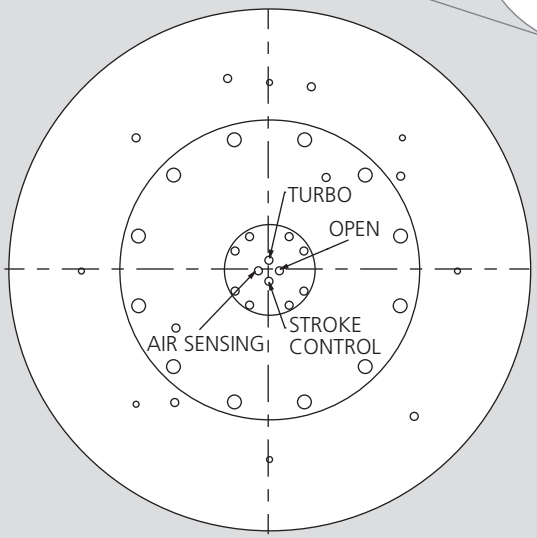

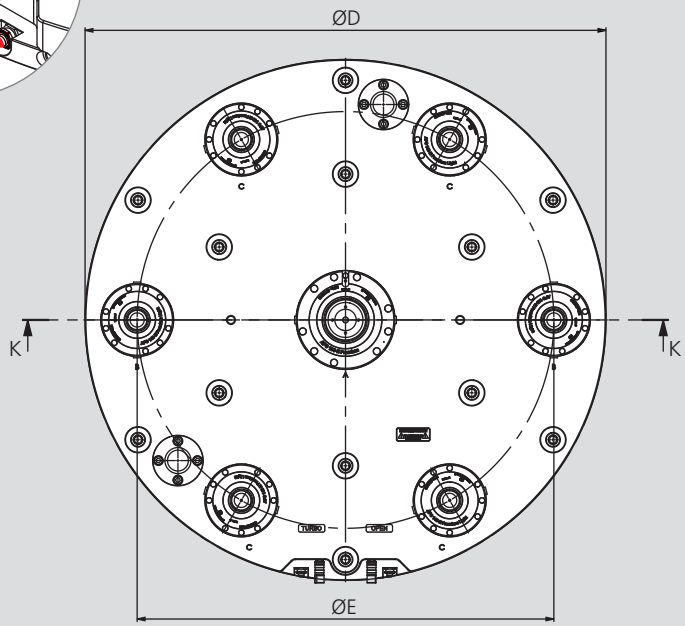

Subject to technical changes.

Type	Id. No.	Pull-down force with Turbo [kN]	Repeatability [mm]	Ø	A	B	C	D	E	APS 140 n°	APS 190 n°	Weight [kg]
Clamping unit with APS 190 E Premium SC + APS 140 E Premium light	on request	45 (APS 190) 26 (APS 140)	< 0.005	630	50	82	380	630	480	4	1	128
	on request		< 0.005	800	55	87	520	800	600	6	1	222
	on request		< 0.005	1000	55	87	520	1000	800	6	1	346
	on request		< 0.005	1200	60	92	720	1200	1000	8	1	519

APS 190 - 140

Application/customer benefits

- Pre-assembled clamping pallet for APS turning plates
- Universal applicable
- Ready to use

Technical features

- Fully assembled
- Rust protected
- High quality steel (1.1730)

Standard equipment

1 clamping pallet: Fully assembled with 1 clamping pin (type A for APS 190), 2 clamping pin (type B for APS 140); 2 / 4 / 6 clamping pin (type C for APS 140), 2 male pre-centering pins

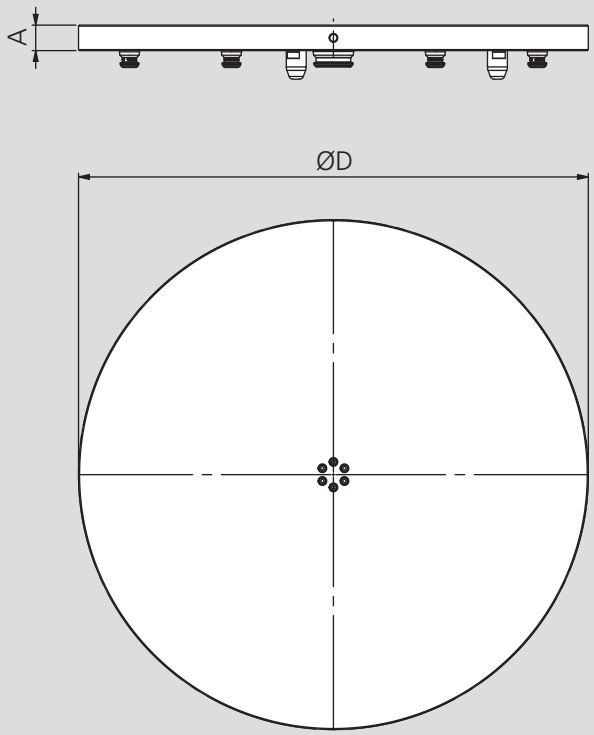

Subject to technical changes.

Application examples

Id. No.	Ø	A	Weight [kg]
on request	630	40	102
on request	800	40	163
on request	1000	50	316
on request	1200	50	455

Chuck flanges

DIN 55026 / ISO-A 702/1

Mounting flanges on short taper spindle noses

- Direct and indirect mounting
- Reduction and increase mounting

Application/customer benefits

- Flanges for short taper mount spindles (DIN 55026/ISO-A 702/1)
- Easy installation of chucks on the machine spindle

Flange FF 1 = Direct mounting
Flange FF 2 = Reduction of taper
Flange FF 3 = Increase of taper

Technical features

- Case hardened
- High precision grinding of the taper and all reference dimensions

Standard equipment

Fixing bolts of the indirect mounting flange on the spindle nose

Ordering example

Flange FF 2 A8 Id. No. 24185000

Type FF 1
ISO-A mounting direct

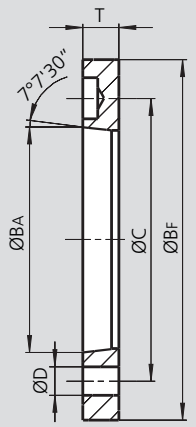

Type FF 2
ISO-A mounting reduction

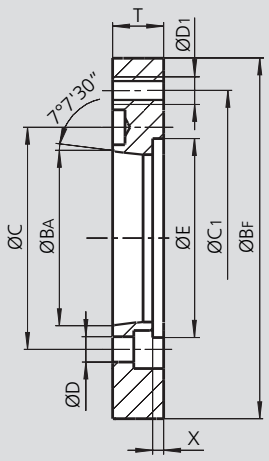

Type FF 3
ISO-A mounting increase

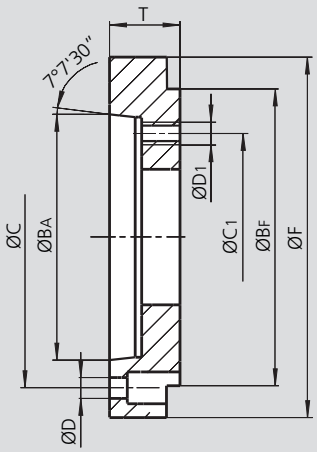

Subject to technical changes.

Flange type FF 1

Flange Id. No.	Spindle nose	BF [mm]	BA [mm]	C [mm]	D [mm]	T [mm]	Weight [kg]
24125000	**A15**	380	285.775	330.2	25	23	8
24127100*	**A15**	380	285.775	330.2	25	33	11.5
24178000	**A20**	520	412.775	463.6	27	25	14.5

* **Suggestion:** This flange is thicker than the standard one, to be used only if necessary!

Flange type FF 2

Flange Id. No.	Spindle nose	BF [mm]	BA [mm]	C [mm]	D [mm]	C1 [mm]	D1 [mm]	E [mm]	X [mm]	T [mm]	Weight [kg]
24185000	**A8**	380	139.719	171.4	17	330.2	M24	197	10	40	24
24115000	**A11**	380	196.869	235	21	330.2	M24	197	10	40	21
24116100	**A11**	520	196.869	235	21	463.6	M24	267	12	45	54
24126100	**A15**	520	285.775	330.2	25	463.6	M24	-	-	40	40
24179400	**A20**	720	412.775	463.6	27	647.6	M30	-	-	50	93

Flange type FF 3

Flange Id. No.	Spindle nose	BF [mm]	BA [mm]	C [mm]	D [mm]	C1 [mm]	D1 [mm]	F [mm]	T [mm]	Weight [kg]
24175000	**A20**	380	412.777	463.6	27	330.2	M24	520	58	55

Industry 4.0 product

APS Clamping units

Customized solutions for automation

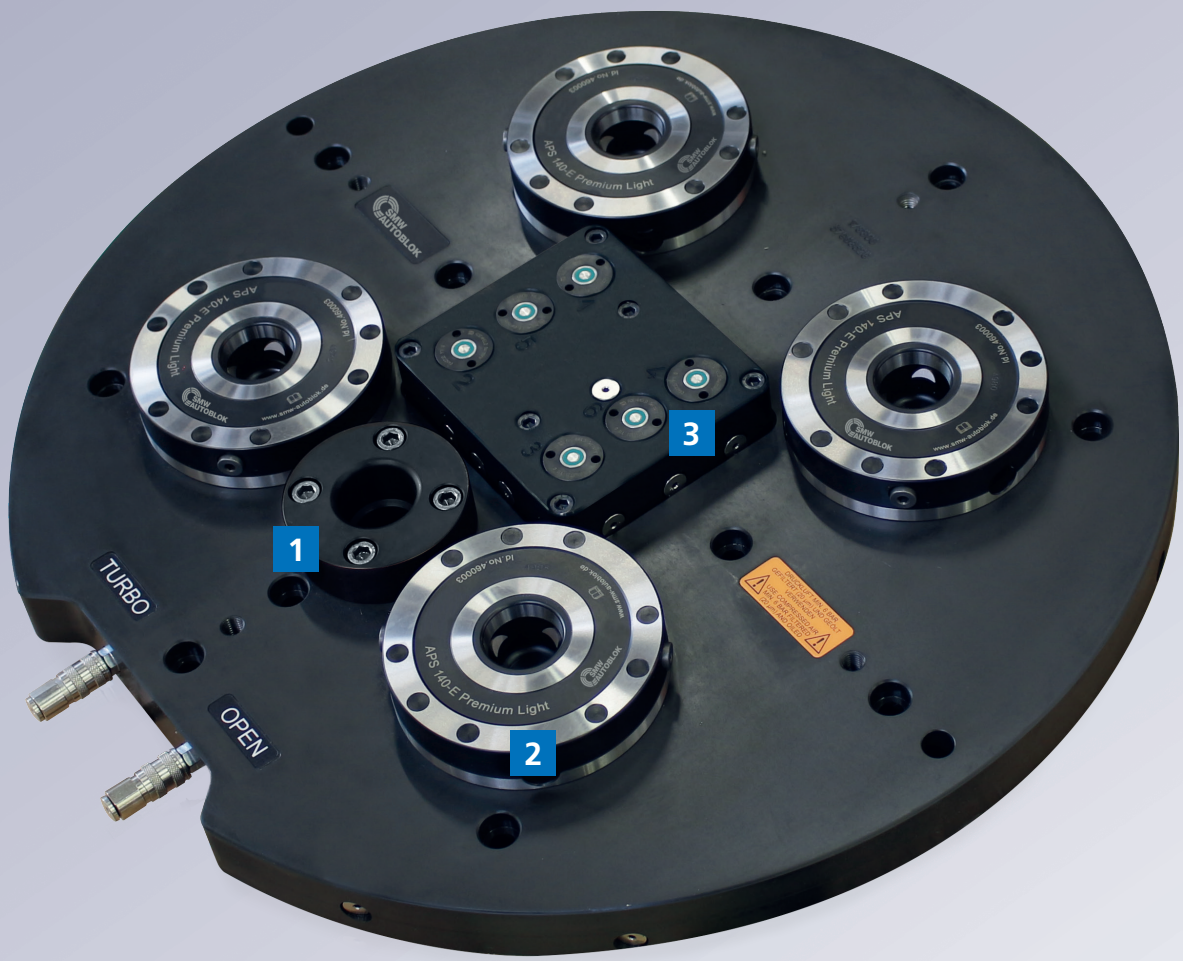

Functional overview of the APS clamping units

1	Pre-centering
2	APS zero point clamping module
3	Distribution plate for media feed (pneumatic / hydraulic) 6 channel

Application examples

Solution 1

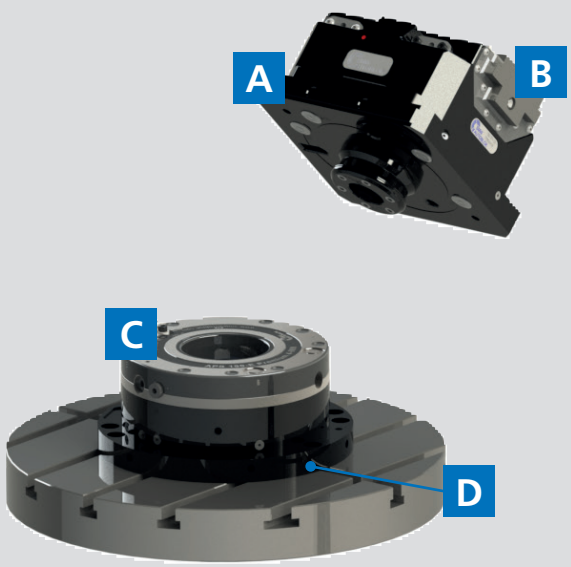

Id. No.	Solution 1	Solution 2	Solution 3
A	46200103	46201111	46201111
B	77904418	77904418	77904418
C	46162640	46202028	46202024
D	46203000	460022	46202000

Solution 2

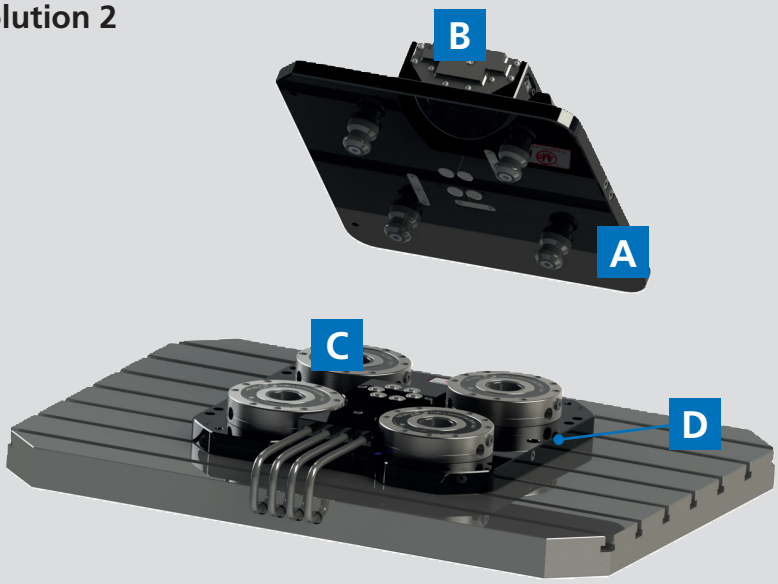

Solution 3

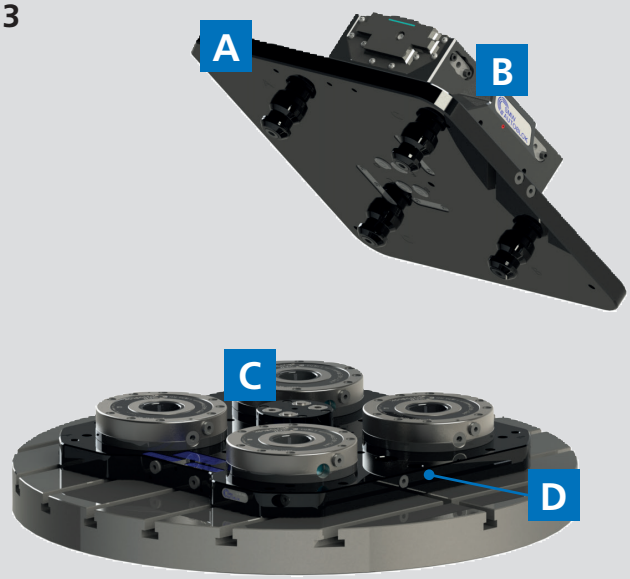

Hydraulic power chuck

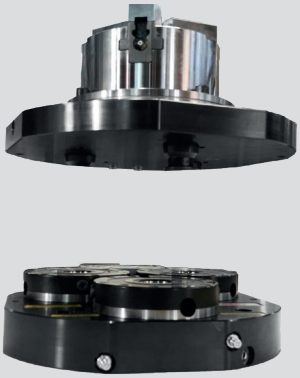

Industry 4.0 Product

APS
Clamping units for automation

Possible configuration scheme for 5-axis machines
2 / 4 / 6 feedings

1 Feedings - for 5-axis machines

2 feedings cover

Inluded to Id. No. 46202000

4 feedings media feed 5-axis

Id. No. 46202026
+ 2 feedings Id. No. 71718106

6 feedings media feed 5-axis

Id. No. 46202026
+ 2 feedings Id. No. 71718106

2 Plate with 4 APS 140
with central distributor

Prepared for 6 feedings Id. No. 46202000

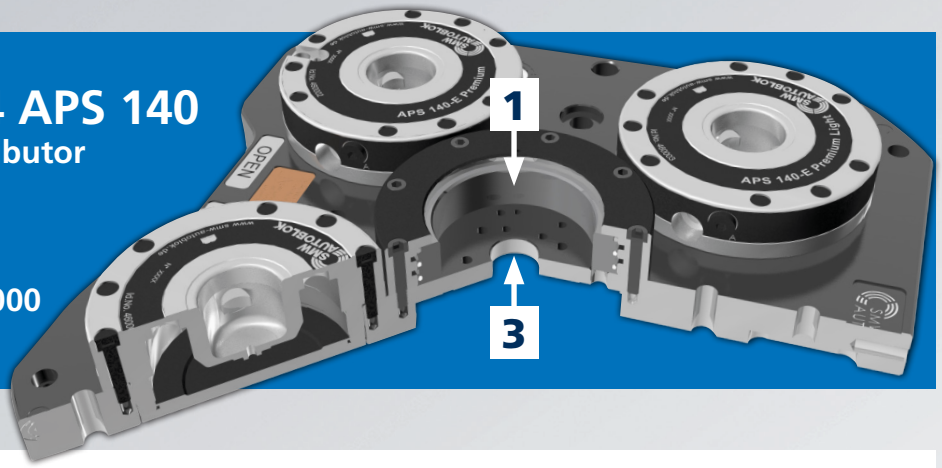

3 Distributor

To be designed specifically for each machine until to 6 feedings (must be definied in case of order).

2 feedings

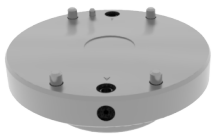

4 feedings

6 feedings

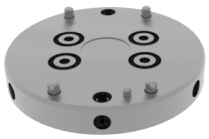

4 T-nuts set

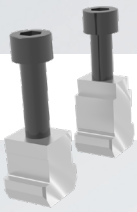

Optional
See page 67

Order guide: Plate with 4 140 APS to order pos. **1+2+3+4**
1. Media feed
2. Plate group with n.4 APS 140 Id. No. 46202000 (n.4 140 APS supplied)
3. Distributor
4. T-nuts set

Order examples:
n.1 distributor + n.1 46202000 + n.1 support + n.1 T-nuts set

4 APS 140-E

Clamping unit for automation 5-axis 2 / 4 / 6 feedings

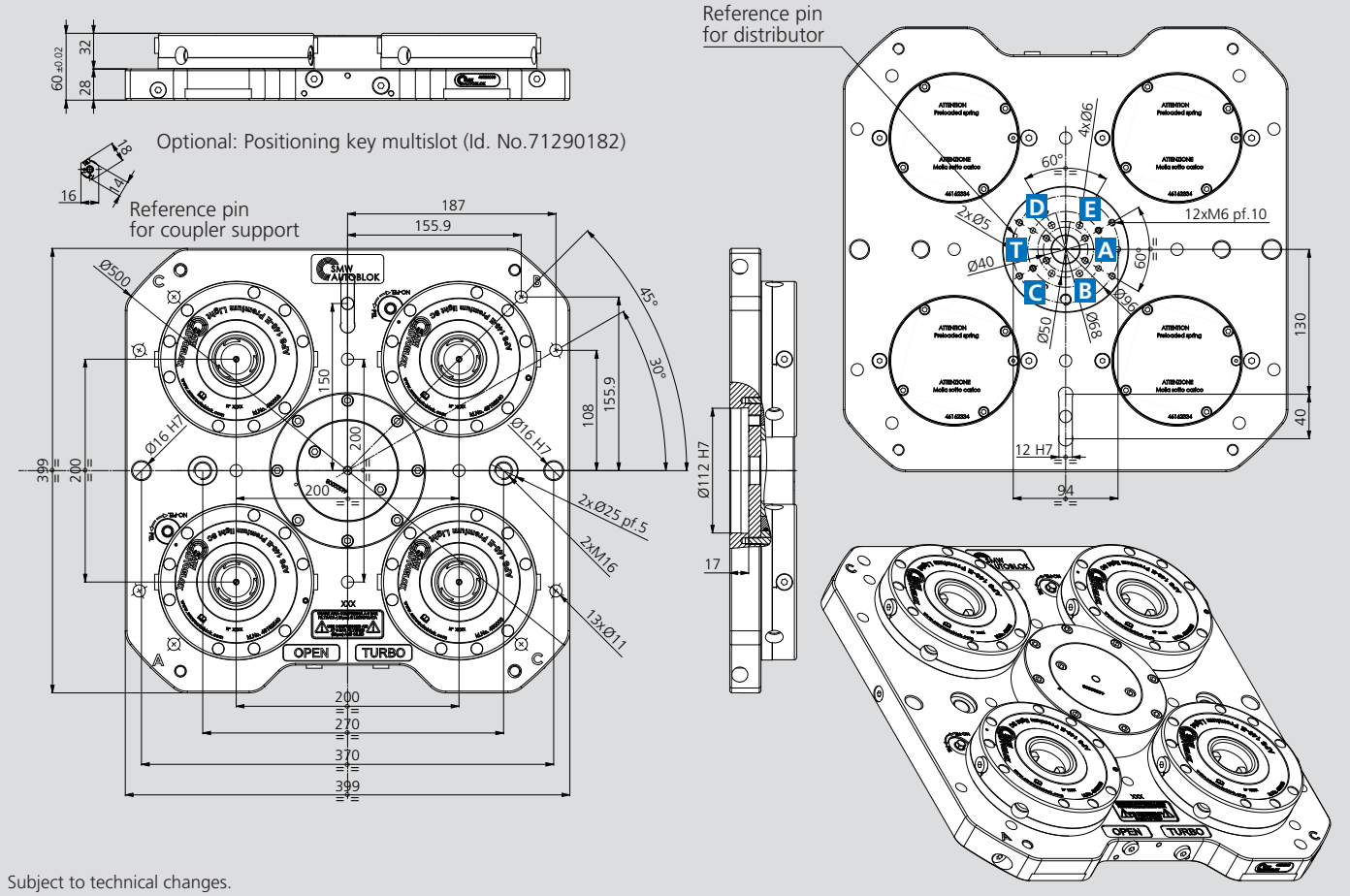

Subject to technical changes.

Pallet (APS included)	Id. No.	Weight [kg]
Pallet 4 APS 140 E PREMIUM SC for 5-axis	46202000***	43

A APS open **T** Air sensing / Turbo APS

The feedings **B C D E** are transferred on the pallet between pneumatic and hydraulic couplers put on the body of the APS (Id. No. 46202026 with 2 or 4 feedings Id.-No. 71718106). If there are one or more of the Twin Vise models STV or PT mounted on the pallet, the feedings can be used in these different ways:

B Twin Vise open **C** Twin Vise closed **D** Stroke control valve Twin Vise

E Air sensing Twin Vise

* **Note 1:** Can be used the air sensing on the plate for the 5 axis using the TURBO feeding.
****Note 2:** When air sensing is not used, it can be excluded between two selectors present on the plate face.
*****Note 3:** Cover Id.-No. 46202008 included.

Media feed 5-axis 2 / 4 / 6 feedings for plate with 4 APS 140 E PREMIUM LIGHT SC

4 APS 140-E

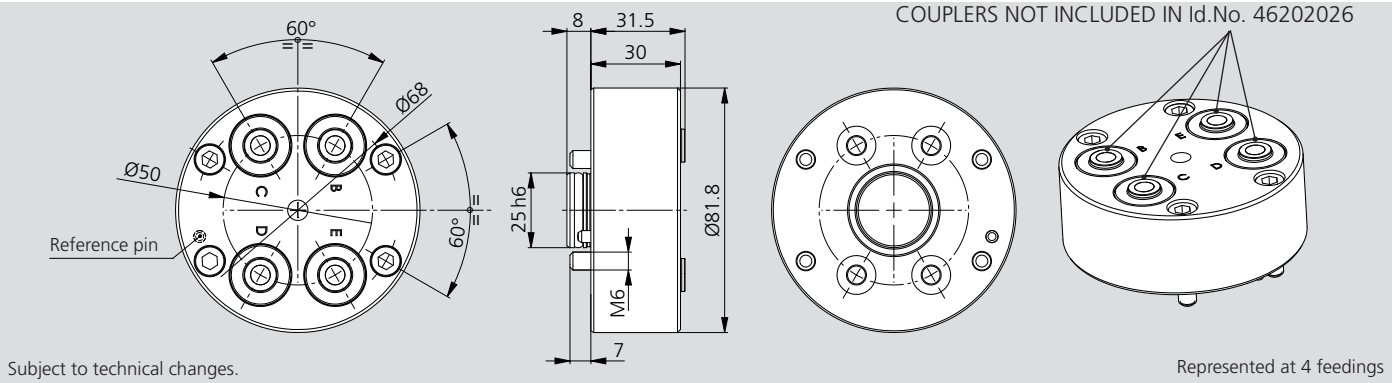

Subject to technical changes.

Represented at 4 feedings

MEDIA FEED PREPARED FOR 4 COUPLERS (AT MAXIMUM)	Id. No.	Possible feedings
MEDIA FEED WITH 4 SEAT MALE COUPLERS	46202026	B-C-D-E
MALE COUPLER	71718106	-

Industry 4.0 Product

For more detailed information please ask our SMW-AUTOBLOK experts.

APS
Module height extension for automation

Possible configurations scheme for 5-axis machines 2 / 4 / 6 feedings

1 APS 190

▶ **2 feedings configuration**

*

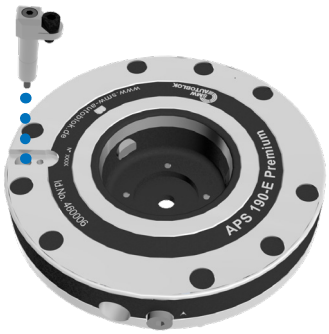

APS 190 E PREMIUM SC
46165640

▶ **4 feedings configuration**

*

APS 190 E PREMIUM SC-6S
46162650
+ 2 feedings Id.-No. 71718106

▶ **6 feedings configuration**

*

APS 190 E PREMIUM SC-6S
46162650
+ 4 feedings Id.-No. 71718106

2 Module height extension group

▶ **Prepared for 6 feedings**
Id. No. 46203000

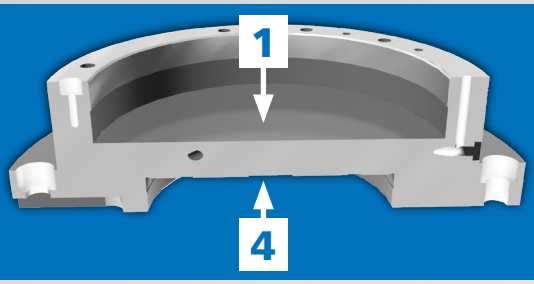

3 Key*

4 Distributor (example)

▶ **To be designed specifically for each machine until to 6 feedings (must be definied in case of order).**

▶ **2 feedings**

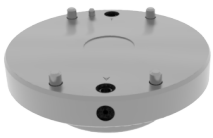

▶ **4 feedings**

▶ **6 feedings**

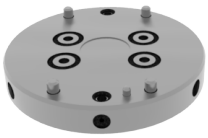

5 T-nuts set

Optional
See page 67

Order guide: APS with 1 key to order positions **1-5:**
1. 190 APS with single key
2. Module height extension group Id. No. 46203000
3. To order key Id. No. 46162333
4. Distributor
5. T-nuts set

Order example: 1 pc. 46203000 + 1 pc. 46165640 + 1 pc. 46162333 + 1 pc. personalized distributor + 1 T-nuts set.

For automation

Module height extension one APS prepared for 5-axis machines until 6 feedings

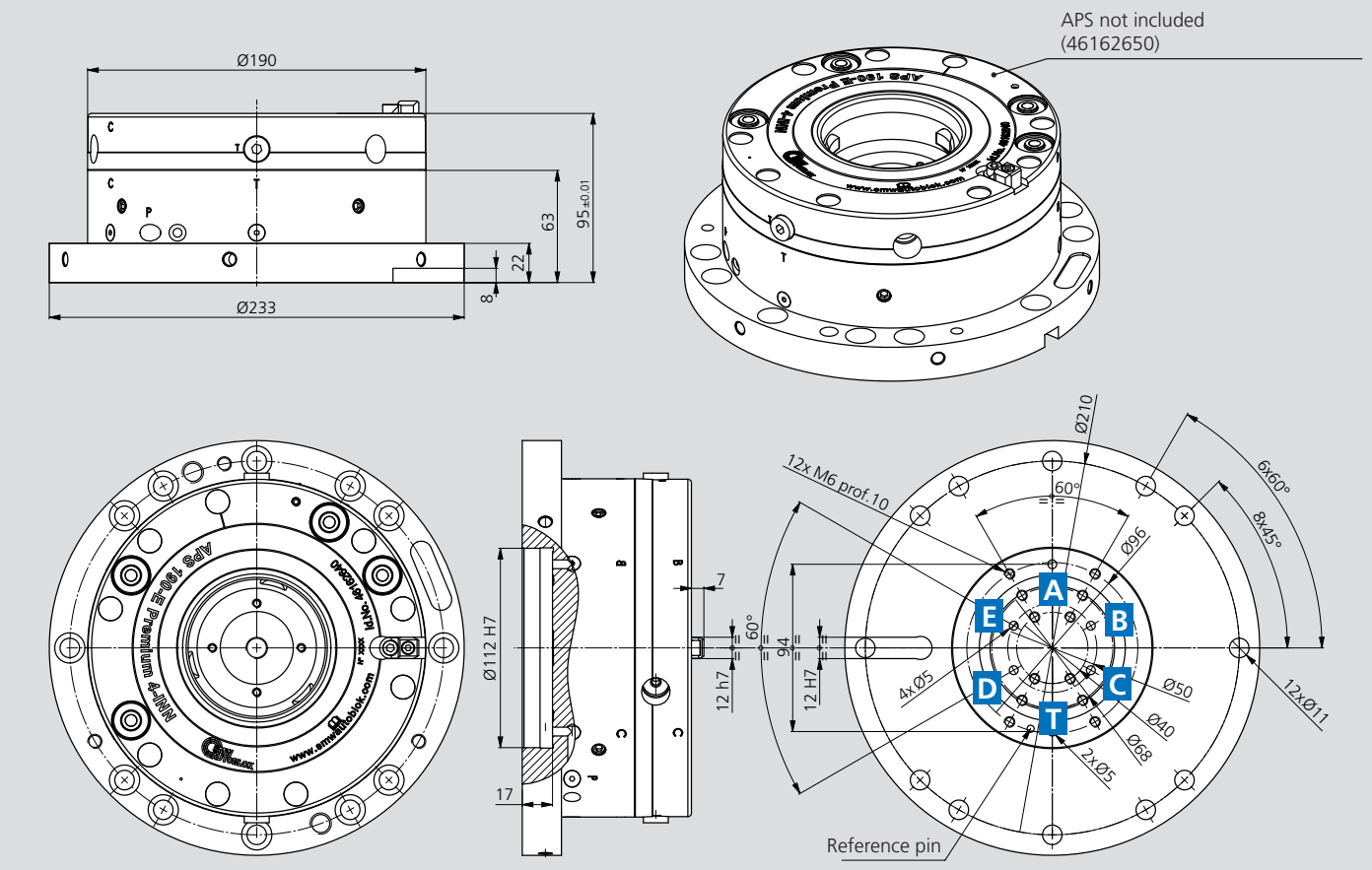

Subject to technical changes.

Module height extension (APS not included)	Id. No.	Height [mm]	Weight [kg]
Module height extension group N.6 feedings H95	46203000	95	10.5

A APS open

T Air sensing / Turbo APS

The feedings **B** **C** **D** **E** are used on the pallet between pneumatics and hydraulics couplers put on the body of 190 APS (Id. No. 46162650). When on the pallet is mounted a Twin vise model STV or PT the feedings can be used in these different ways:

B Twin Vise open

C Twin Vise closed

D Stroke control valve Twin Vise

E Air sensing Twin vise or Driver pin stroke control APS

The feeding **E** can not to be used on the pallet with the pneumatic / hydraulic coupler but can be used in another way to oversee the pneumatic stroke control of the APS 190; in this case the feeding is called **SC.**

Pallet holder with 2 - 4 feedings
■ **Prepared for robot loading**

180 STV

The pallet is prepared for loading with robots.

Hardened and tempered material

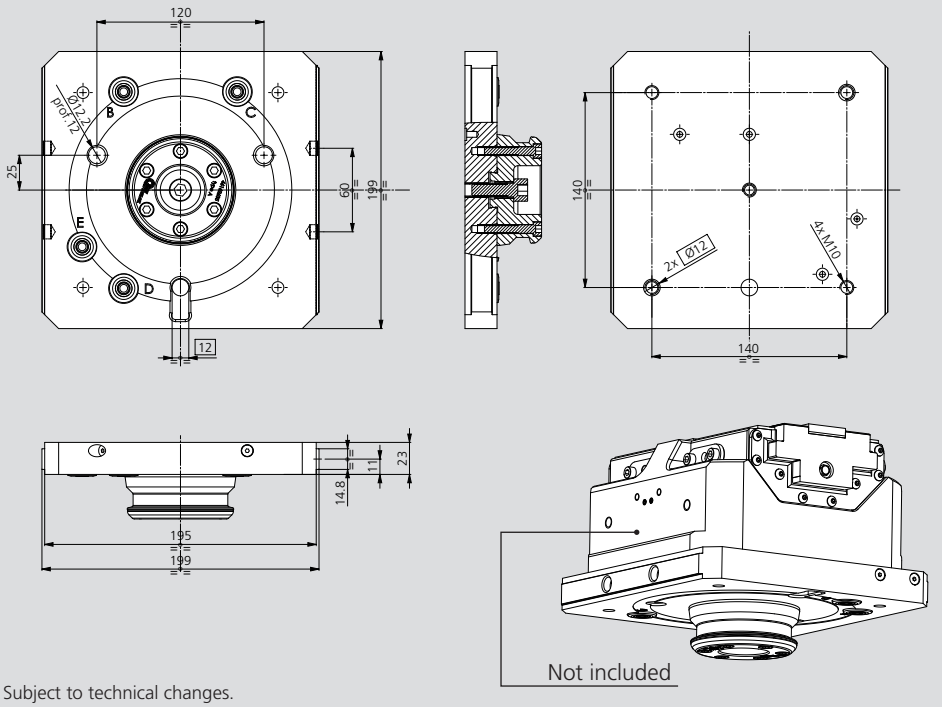

Subject to technical changes.

Type pallet (without vise)	Id. No.	Feedings to be used	Weight [kg]
Pallet holder 180STV 2-3 jaws with 4 feedings APS 190 loading robot	46200101	B-C-D-E	7.7
Pallet holder 180STV 2-3 jaws with 2 feedings APS 190 loading robot	46200103	B-C	7.7

Pallet holder with 2 - 4 feedings
■ **Prepared for robot loading**

225 STV

The pallet is prepared for loading with robots.

Hardened and tempered material

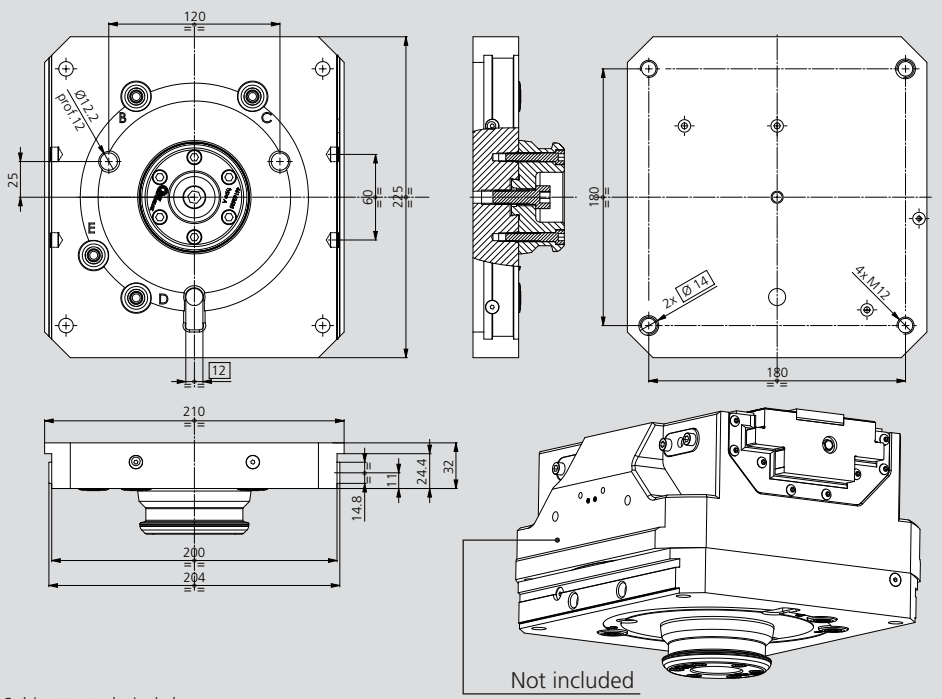

Subject to technical changes.

Type pallet (without vise)	Id. No.	Feedings to be used	Weight [kg]
Pallet holder 225STV 2-3 jaws with 4 feedings APS 190 loading robot	46200106	B-C-D-E	12
Pallet holder 225STV 2-3 jaws with 2 feedings APS 190 loading robot	46200108	B-C	12

APS 100

Combi unit

Application/customer benefits

- Pre-assembled clamping unit with 2 pieces APS 100 E Premium
- Universal applicable
- Fast and easy set-up

Technical features

- 2 clamping slides
- Repeatability < 0.005 mm
- Turbo function to increase the pull-down forces up to 15 kN (pull-down force without Turbo 4 kN)
- Anti rotating protection
- Air cleaning

Standard equipment

Combi unit with 2 pieces APS 100 E Premium

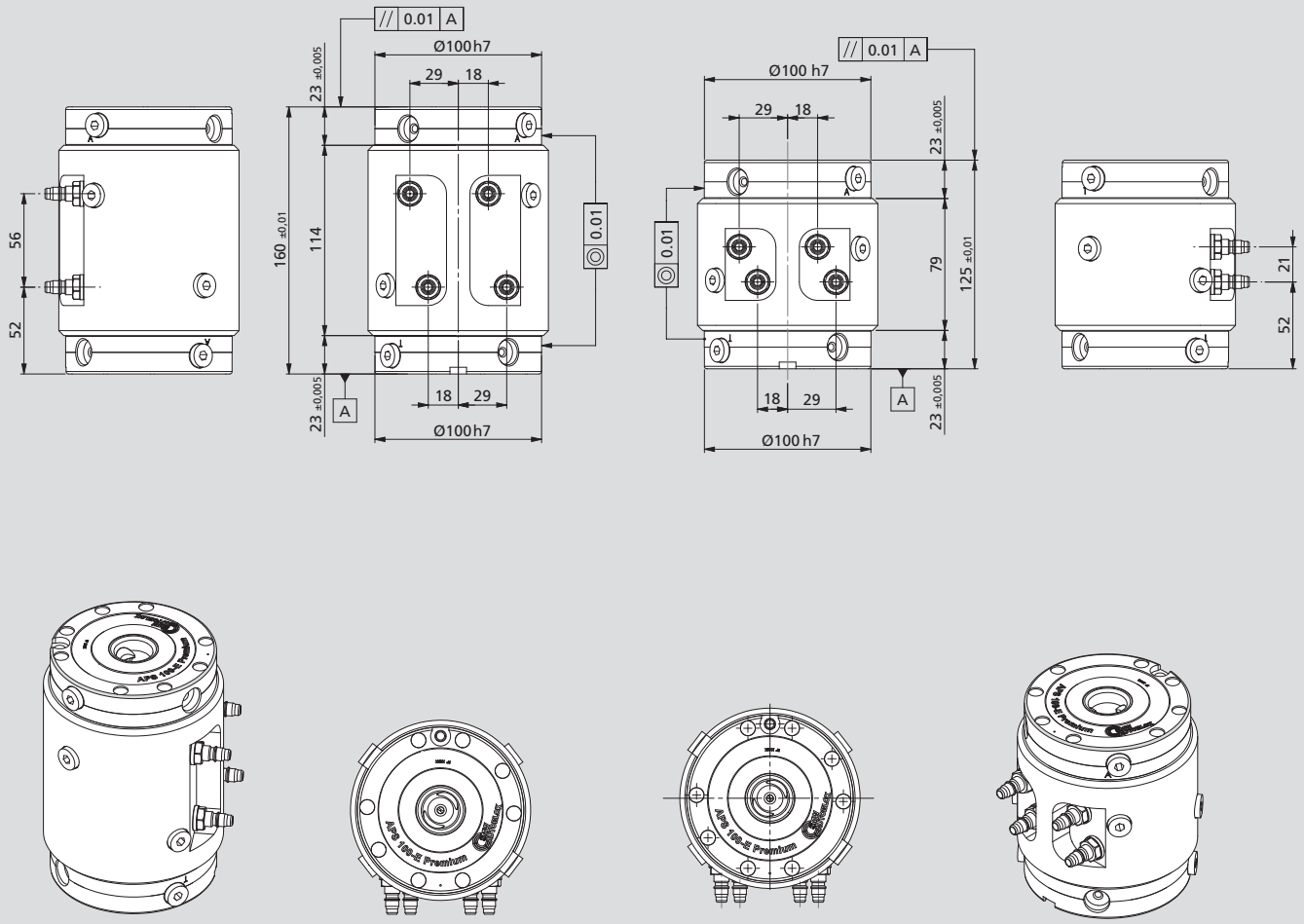

Subject to technical changes.

Order numbers

Type	Id. No.	Height [mm]	Weight [kg]
Combi unit with 2 pieces APS 100 E Premium	460117	125	7
Combi unit with 2 pieces APS 100 E Premium	460118	160	9

APS 140

Application/customer benefits

- Pre-assembled clamping unit with 2 pieces APS 140 E Premium SC
- Universal applicable
- Fast and easy set-up

Technical features

- 3 clamping slides
- Repeatability < 0.005 mm
- Turbo function to increase the pull-down forces up to 26 kN (pull-down force without Turbo 7.5 kN)
- Air cleaning
- Anti rotation protection

Standard equipment

Clamping unit with 2 pieces APS 140 E Premium SC

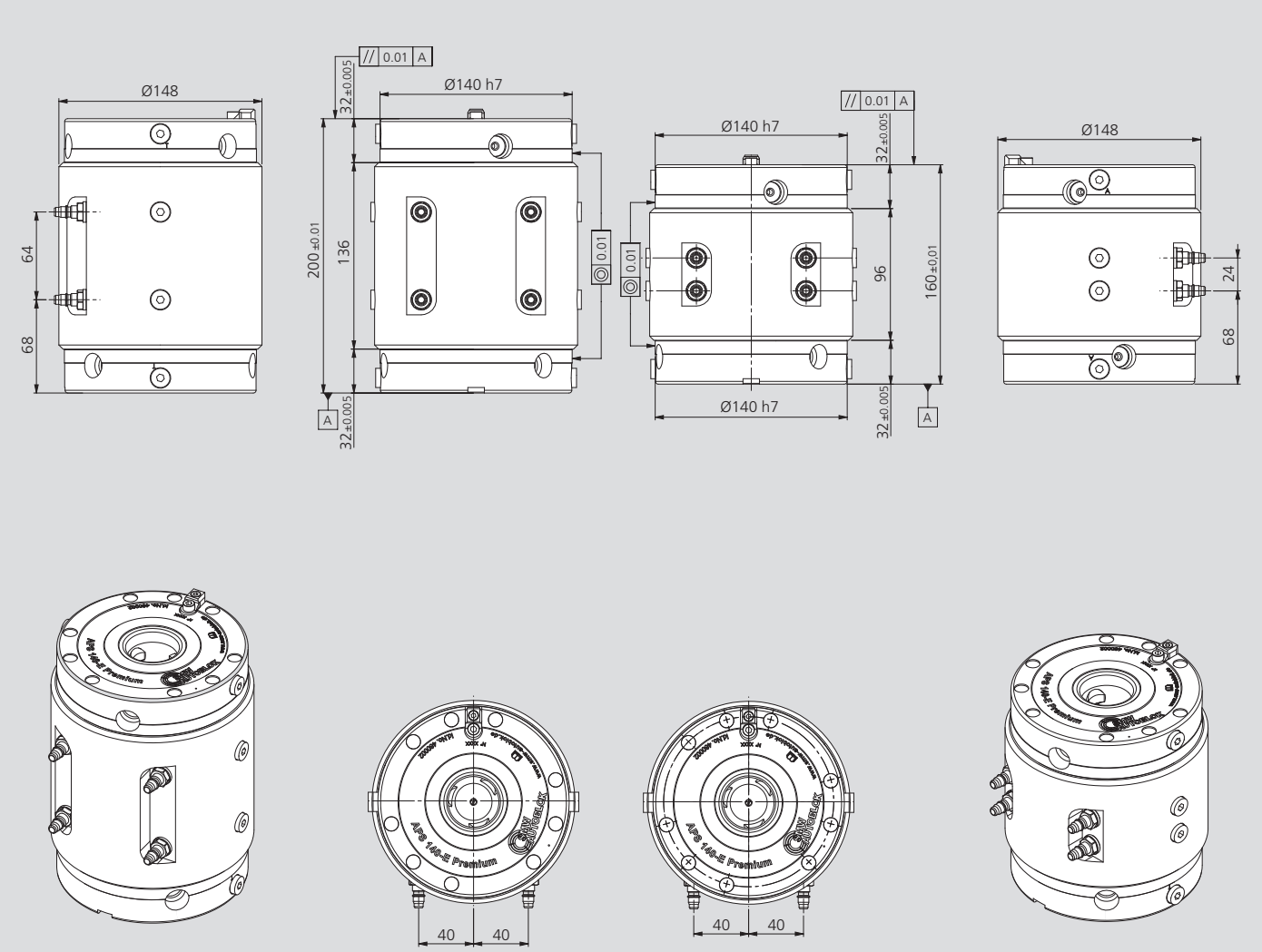

Subject to technical changes.

Order numbers

Type	Id. No.	Height [mm]	Weight [kg]
Combi unit with 2 pieces APS 140 E Premium SC	460119	160	17
Combi unit with 2 pieces APS 140 E Premium SC	460120	200	21

APS 100 / 140

Standard clamping pallets

Application/customer benefits

- Pre-assembled clamping pallet for APS 100 / 140
- Universal applicable
- Ready to use

Technical features

- Fully assembled
- Rust protected
- High quality steel (1.1730)

Standard equipment

1 clamping pallet: Fully assembled with 1 clamping pin (Type A), anti rotation key and hand grips
2 clamping pallet: Fully assembled with 1 clamping pin (Type A) and 1 clamping pin (Type B)
4 clamping pallet: Fully assembled with 1 clamping pin (Type A), 1 clamping pin (Type B), 2 clamping pin (Type C)

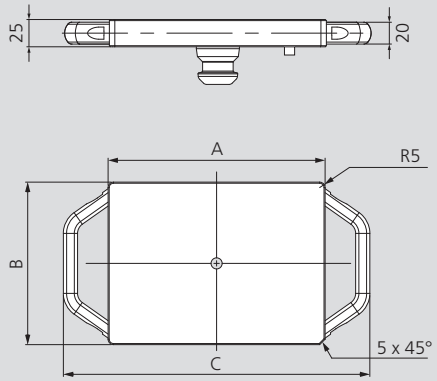

Subject to technical changes.

Type	Id. No.	A mm	B mm	C mm
Clamping pallet APS 100	46167721	149	149	231
Clamping pallet APS 140	46167722	199	149	281

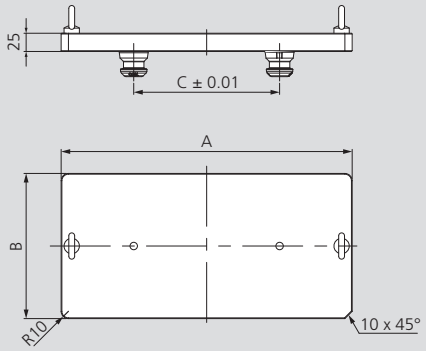

Subject to technical changes.

Type	Id. No.	A mm	B mm	C mm
Clamping pallet APS 100	46167723	299	149	150
Clamping pallet APS 140	46167724	399	199	200

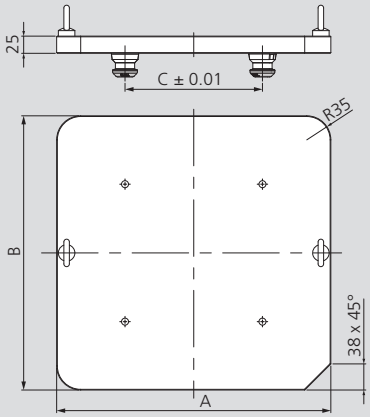

Subject to technical changes.

Type	Id. No.	A mm	B mm	C mm
Clamping pallet APS 100	46167725	299	299	150
Clamping pallet APS 140	46167726	399	399	200

Customer request data

- required for the preparation of the offer
- Simply fill in and send to:
  contact@stationary-workholding.com

APS

Application/customer benefits

- Customized clamping pallets
- Short delivery times
- Usable for any machine or application
- Rust protected by means of burnishing

Technical features

- High quality steel (1.1730)

Standard equipment

Customized clamping pallet with transport screws
Fully assembled with APS clamping pins on request

Customized clamping pallets

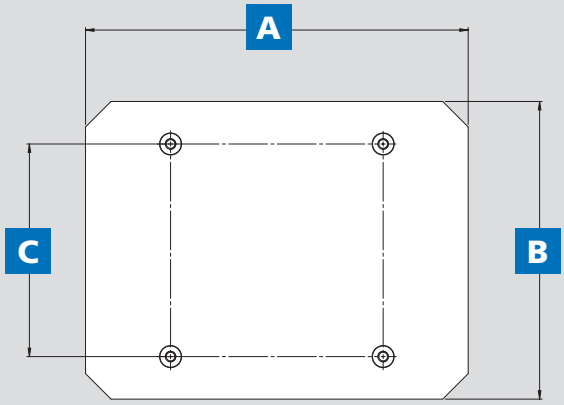

Dimensions	
A	
B	
C	

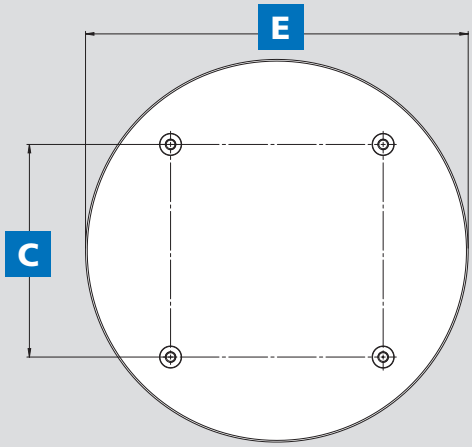

Dimensions	
C	
ØE	

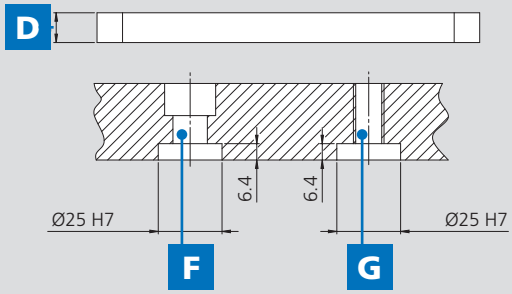

Dimensions		
D		
F	☐ M12	☐ M16
G	☐ M10	☐ M12

APS 140

High quality clamping pallet

■ Basic
■ Premium

Application/customer benefits

- Pre-assembled clamping pallet for APS 140
- Universal applicable
- 2 Versions: Premium and Basic

Technical features

- Grid dimension 200 mm
- Fully assembled including clamping pins
- Premium version with additional adaption for module units
- Rust protected

Standard equipment

Clamping pallet fully assembled with
1 centering pin (type A),
1 sword pin (type B),
Transport screws

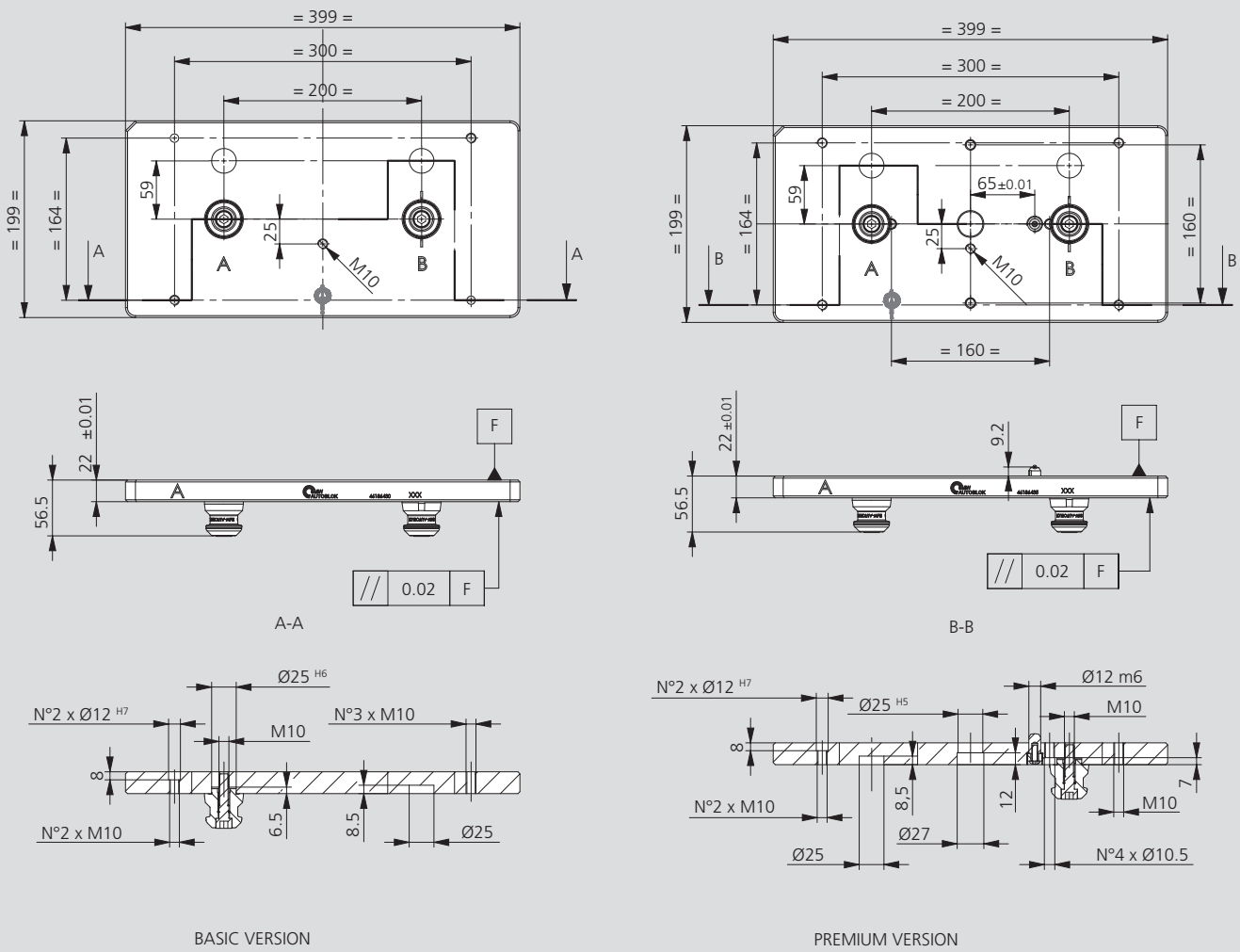

Subject to technical changes.

Order numbers

Type	Id. No.
Clamping pallet APS 140 Premium	46186435
Clamping pallet APS 140 Basic	46186430

High quality clamping pallet

APS 140

■ Basic
■ Premium

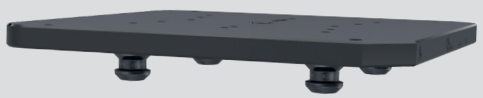

Application/customer benefits

- Pre-assembled clamping pallet for APS 140
- Universal applicable
- 2 Versions: Premium and Basic

Technical features

- Grid dimension 200 mm
- Fully assembled including clamping pins
- Premium version with additional adaption for module units
- Rust protected

Standard equipment

Clamping pallet fully assembled with
1 centering pin (Type A),
1 sword pin (Type B),
2 clamping pins (Type C),
Transport screws

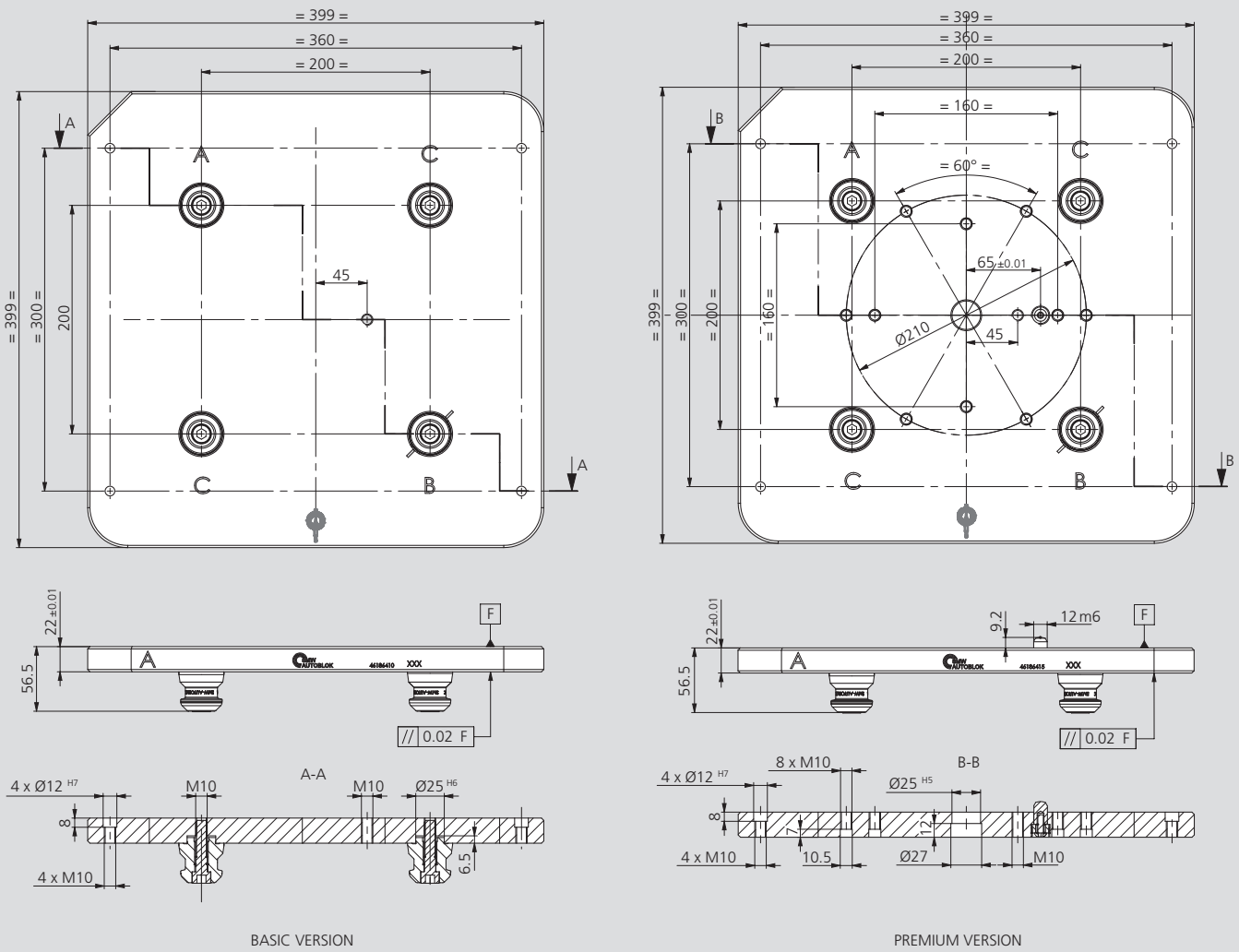

Subject to technical changes.

Order numbers

Type	Id. No.
Clamping pallet APS 140 Premium	46186415
Clamping pallet APS 140 Basic	46186410

Q400

Clamping Pallet Q400

■ Pallet prepared for mounting SGSF chuck

This pallet is prepared
for loading with robots.

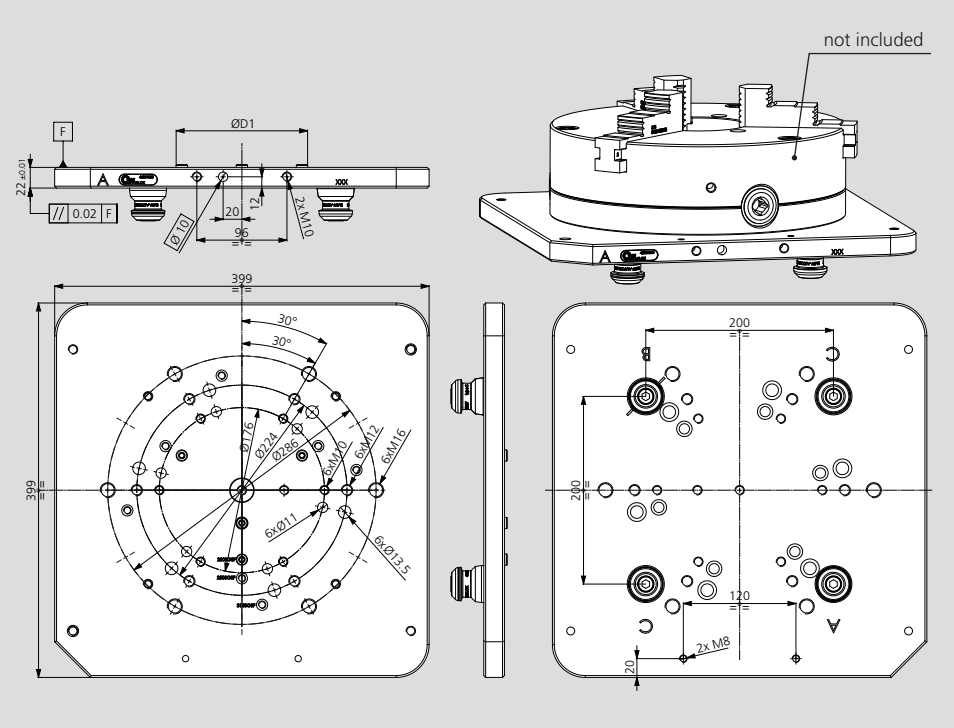

Subject to technical changes.

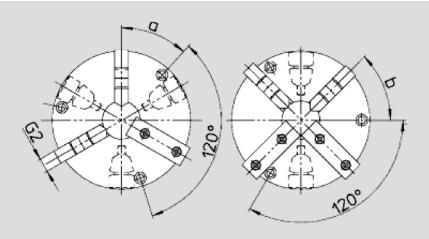

Chuck type SGS-SGSF		200-55	250-76	315-103
Front thread 3+3		33031220	33031225	33031231
Front thread 4+4		33033220	33033225	33033231
	Set-3 GRC	03652030	03652530	03653130
	Set-4 GRC	03652040	03652540	03653140
	Set-3 Soft jaws	03602030	03602530	03603130
	Set-4 Soft jaws	03602040	03602540	03603140

Type pallet (without chuck)	Id. No.	Weight [kg]	Manual chucks SGSF (optional)	
			Ø D1	Chuck model
Pallet Q400 prepared for chucks 200-250-315 SGSF handling robot	46201020	28	159.9	200 SGSF
			199.9	250 SGSF
			259.9	315 SGSF

Q400

Clamping Pallet Q400

■ Pallet prepared for mounting HG-N chucks

This pallet is prepared
for loading with robots.
For information on HG chucks
see page 308 - 329

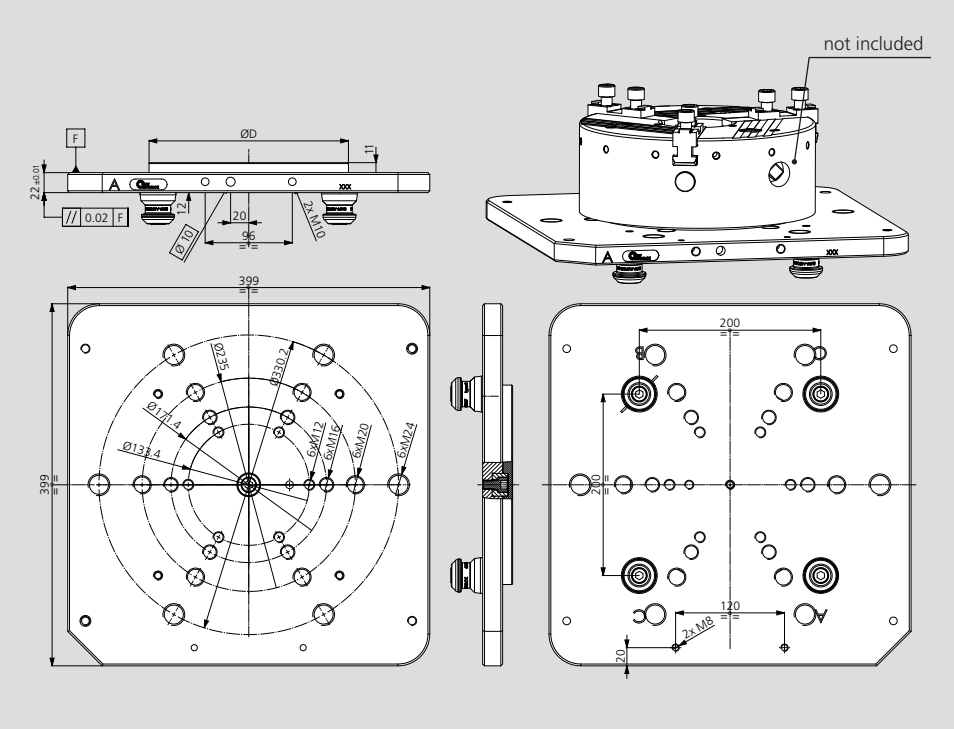

Subject to technical changes.

Type pallet (without chuck)	Id. No.	ØD	Weight [kg]
GRP pallet Q400 + mounting D220 AUTC 260HG loading robot	46201012	219.7	30
GRP pallet Q400 + mounting D300 AUTC 315HG loading robot	46201013	299.7	32
GRP pallet Q400 + mounting D380 AUTC 400-500HG manual loading	46201014	379.7	36

Clamping pallet for automation with MC150x200 vises
■ Pallet prepared for mounting 1 vise

Q400

This pallet is **not** prepared
for handling with robots.
For information on MCI vises
see page 273 - 284

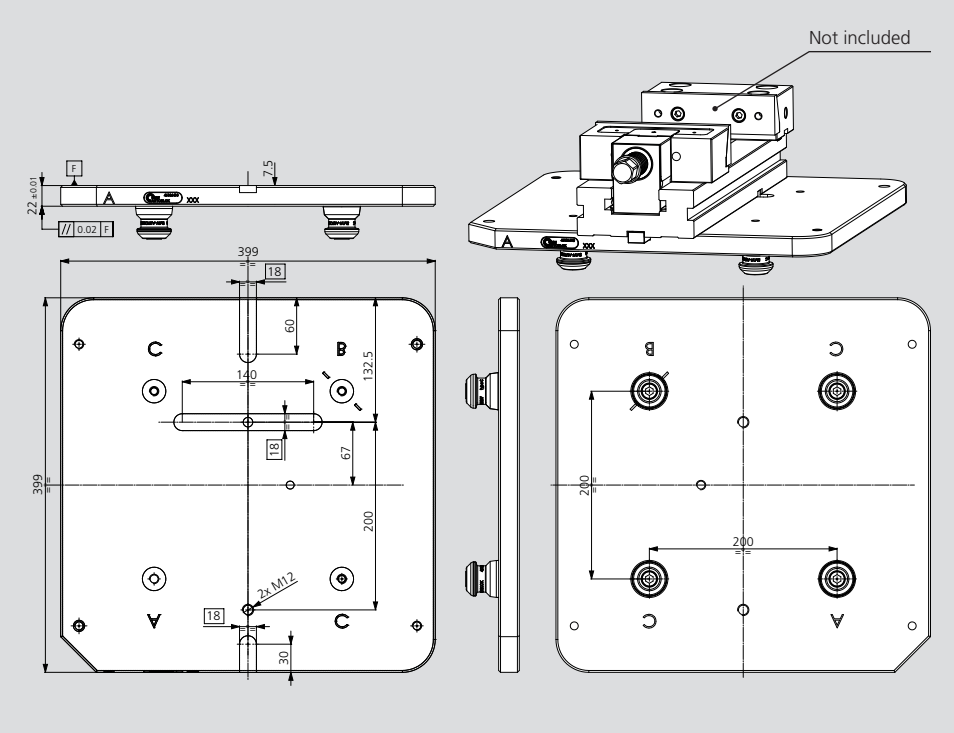

Subject to technical changes.

Type pallet (without vise)	Id. No.	Weight [kg]
Pallet Q400 prepared for 1 vise MC150x200 manual loading	41702271	28

Clamping pallet for automation with MC150x200 vises
■ Pallet prepared for mounting 2 vises

Q400

This pallet is prepared
for handling with robots.
For information on MCI vises
see page 273- 284

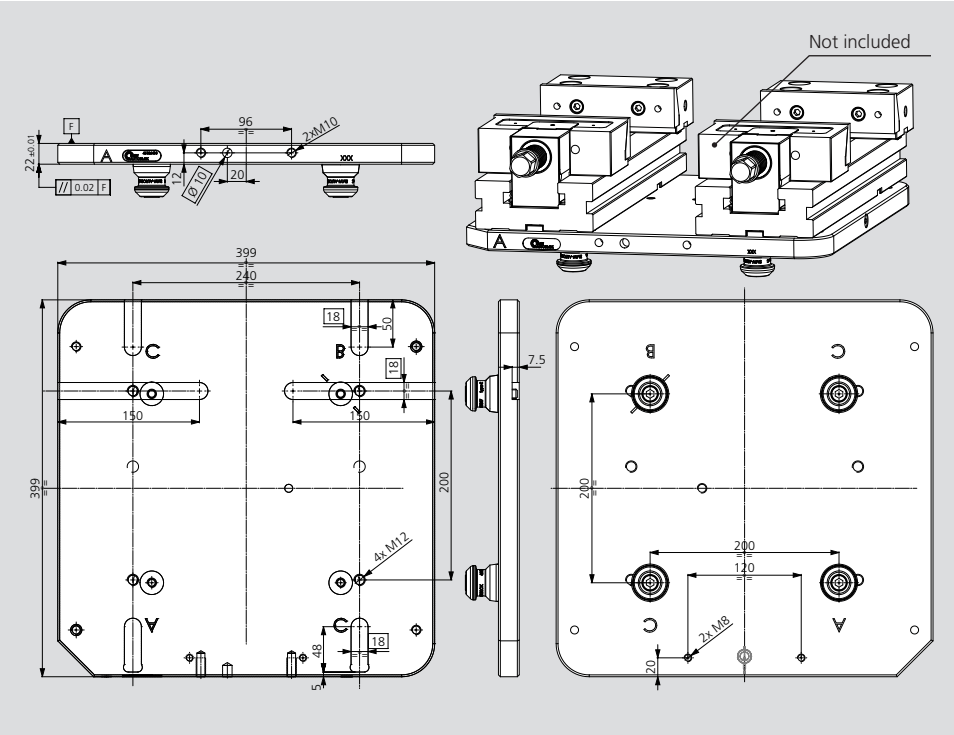

Subject to technical changes.

Type pallet (without vise)	Id. No.	Weight [kg]
Pallet Q400 prepared for 2 vises MC150x200 robot loading	41702261	28

Q400

4 APS 140 pallet STV holder

■ **Pallet with n.4 feedings**

The pallet is prepared for handling with robots.

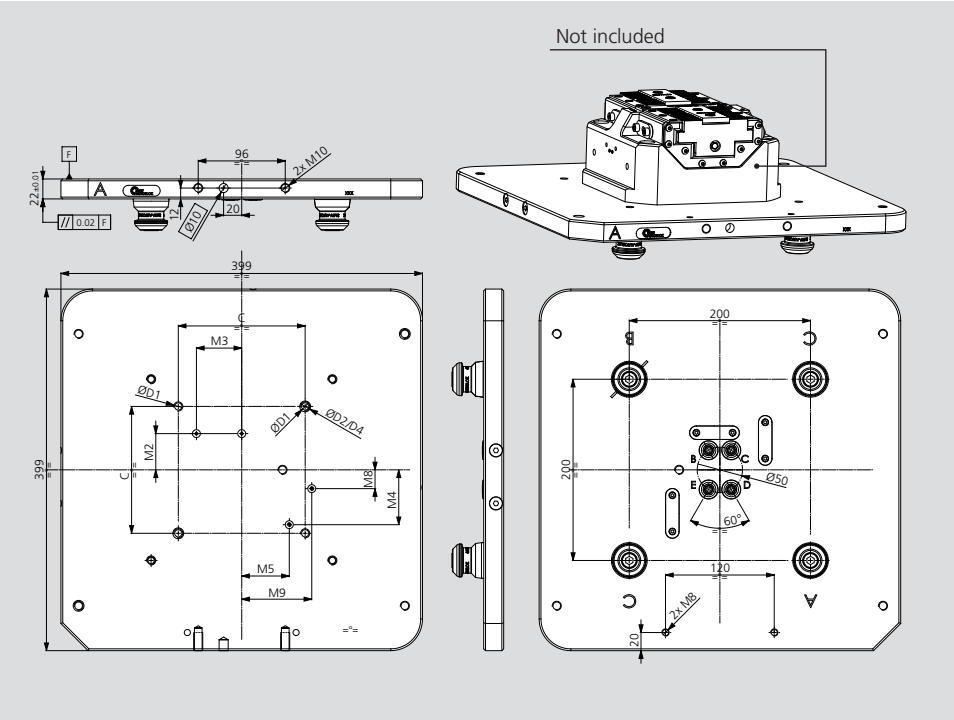

Subject to technical changes.

Type pallet (without vise)	Id. No.	Weight [kg]
Pallet Q400 prepared for 180 STV with feedings loading robot	46201111	28
Pallet Q400 prepared for 225 STV with feedings loading robot	46201101	28

APS 100 / 140

Application/customer benefits

- Spacers to adapt more different module units
- Universal use

Technical features

- Height 20 mm

Standard equipment

Spacer without clamping pin

46168371

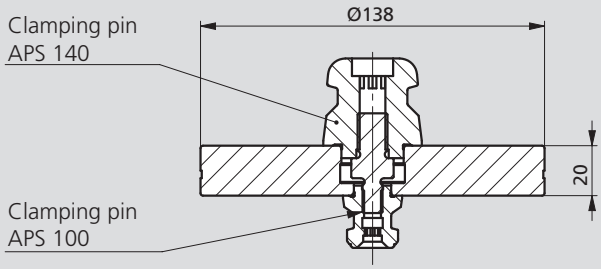

46168366

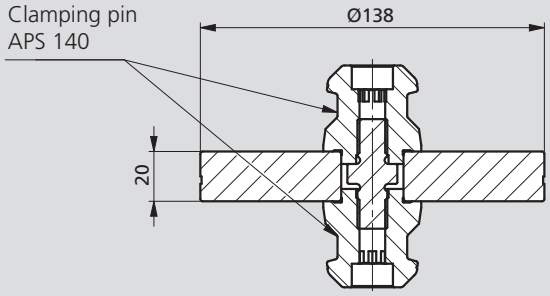

46168370

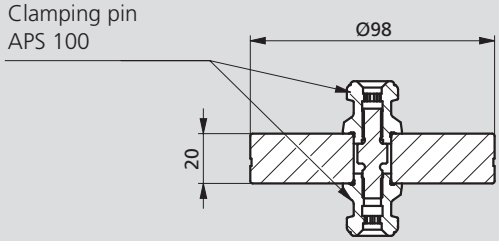

Subject to technical changes.

Type	Id. No.	Height [mm]	Weight [kg]
Spacer H20 APS 140-100	46168371	20	2.2
Spacer H20 APS 140-140	46168366	20	2.3
Spacer H20 APS 100-100	46168370	20	1.1

Application examples

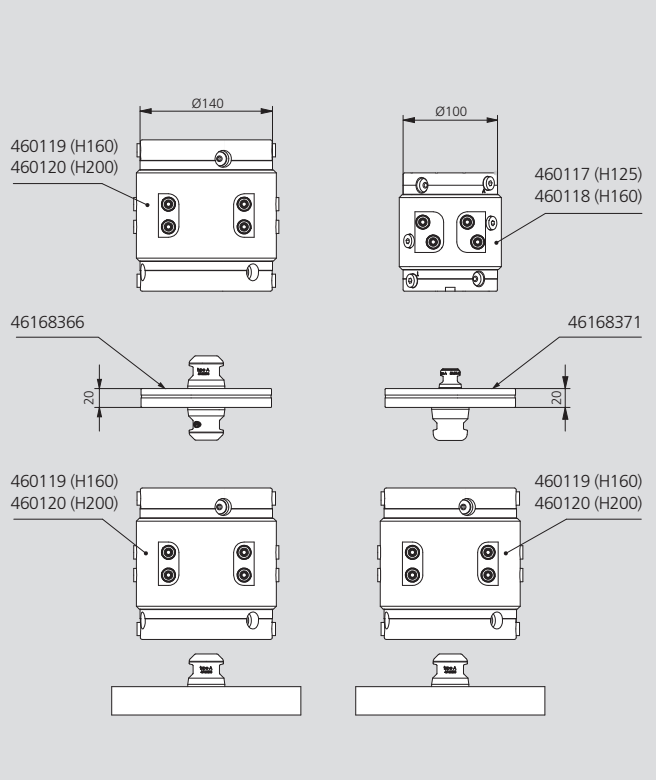

Multi-Slot screw for the positioning of clamping units

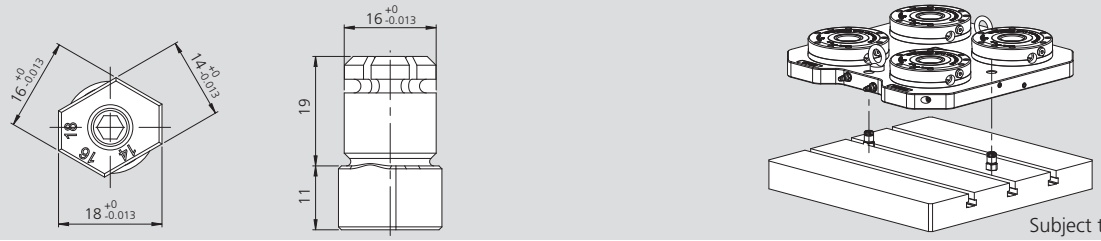

Subject to technical changes.

Type	Id. No.
Multi-Slot 14 / 16 / 18	71290182

Protection cover for screws for APS modules

Subject to technical changes.

Type	Id. No.
APS 100	46162129*
APS 140	46162309*
APS 160	46162609*
APS 190	46162609*
APS 250	46165109*

* The Id. No. refers to one single piece.

Air connection - Protection cover quick connection 1/8“

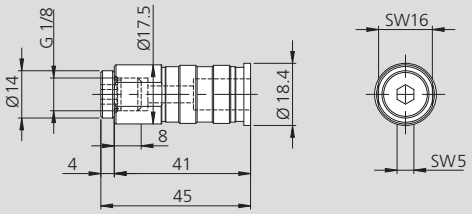

Subject to technical changes.

Type	Id. No.
APS 100 / 140	46167019*

* For all models. Must not be used in rotation.

Air connection - Quick fitting female 1/8“

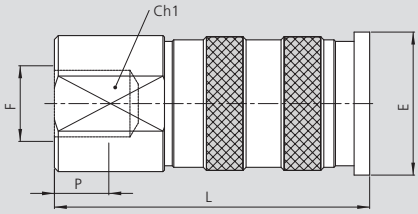

Subject to technical changes.

Type	Id. No.	Ø E	F	L	P
APS 100 / 140	71612801*	18.8	G1/8	42	7

* For all models. Must not be used in rotation.

Air connection - Quick fitting male 1/8“

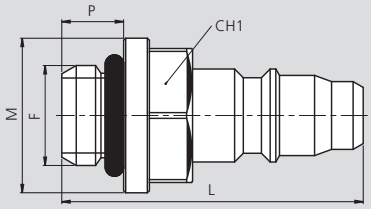

Subject to technical changes.

Type	Id. No.	F	L	Ø M	P
APS 100 / 140	71612802*	G1/8	29.3	15	6

* For all models. Must not be used in rotation.

Keys kit for all APS models
Orientation keys for APS Premium

Keys

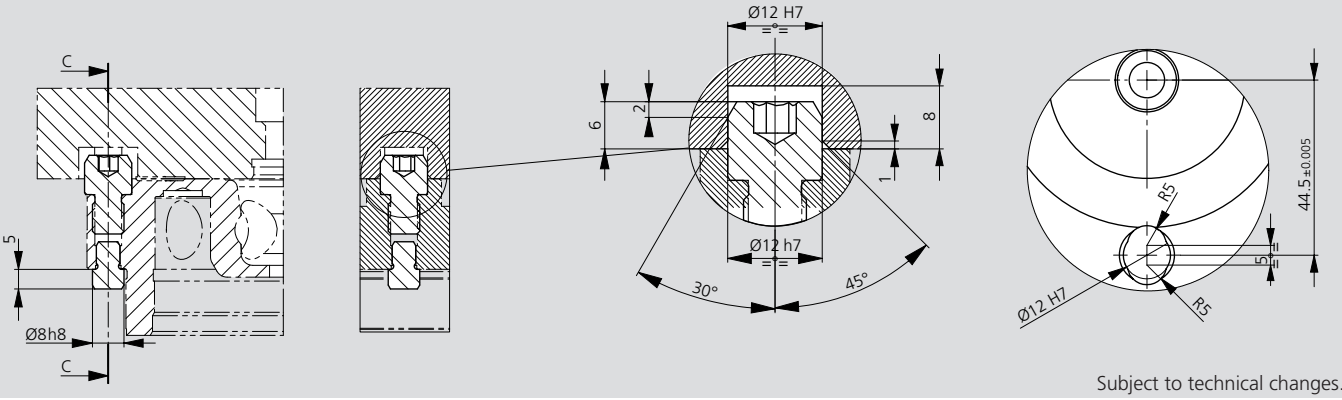

Subject to technical changes.

Id. No.
46162133 - Key kit for APS 100

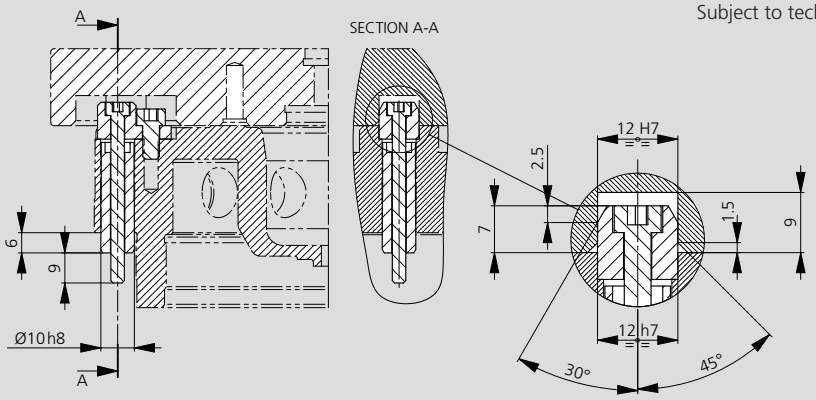

Subject to technical changes.

Id. No.
46162333 - Key kit for APS 140E / APS 190E
46162335 - Key kit SMF 12,5 APS 140E / APS 190E

Magnet protection covers for all APS models

Covers

For Basic / Premium Light module

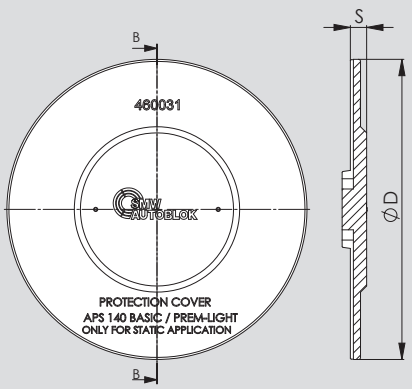

Subject to technical changes.

Id. No.	Model	S	ØD	Weight
460031*	Protection cover with magnet APS 140 Basic / Premium Light module	8	147	0.8 kg
46165730*	Protection cover with magnet APS 160 Basic / Premium Light module	8	167	1 kg

For Premium module

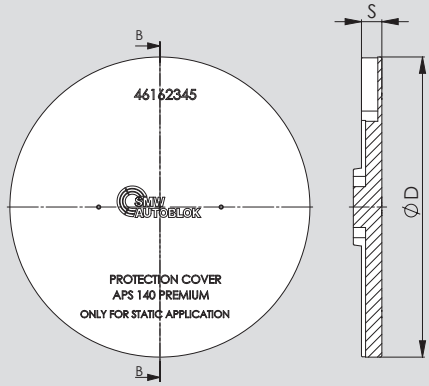

Subject to technical changes.

Id. No.	Model	S	ØD	Weight
460030*	Protection cover with magnet APS 100 Premium	8	107	0.45 kg
46162345**	Protection cover with magnet APS 140 Premium SC	10	147	0.45 kg
46162625**	Protection cover with magnet APS 190 Premium SC	10	197	0.85 kg
46165033**	Protection cover with magnet APS 250 Premium SC	10	257	1.5 kg

*Steel **Aluminium

Pair of clamps (to clamp vises on the machine table from lateral sides)

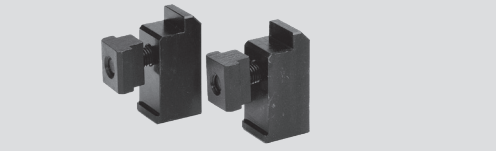

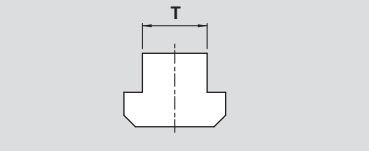

Consisting of:
Pair of clamps incl. T-nut and screw

Type	Id. No.					
T	12 mm	14 mm	16 mm	18 mm	20 mm	22 mm
APS	58042792	58042793	58042794	58042795	58042796	58042797

Pre-centering

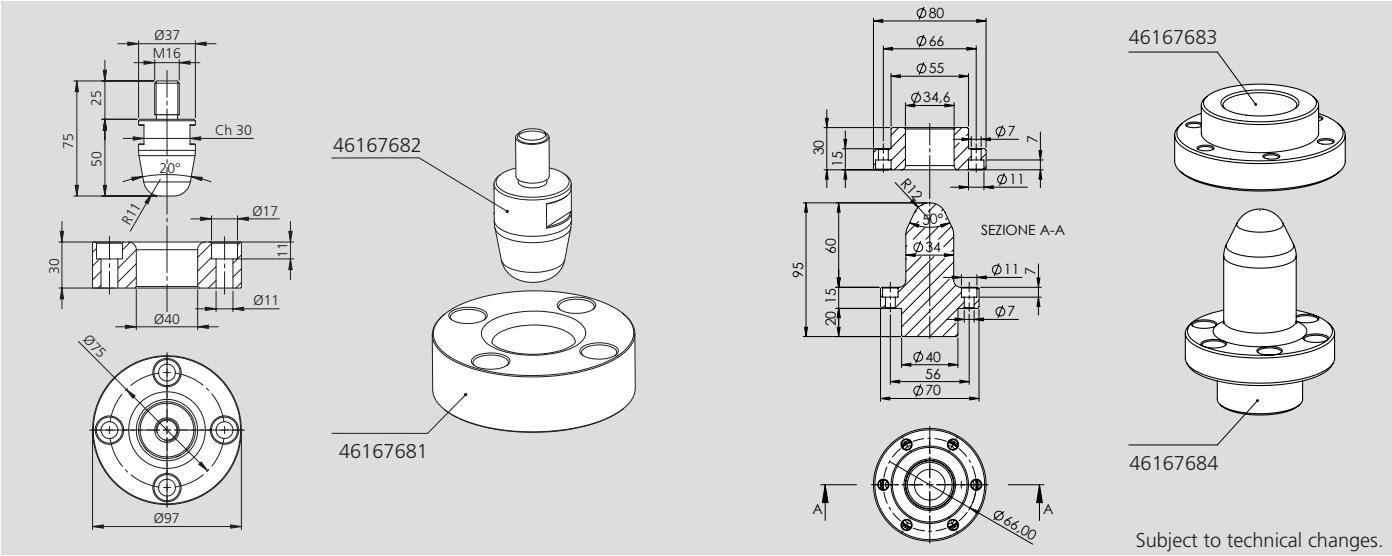

Subject to technical changes.

Type	Id. No.	Weight [kg]
Pre-centering female	46167681	1,3
Pre-centering male	46167682	0,4
Pre-centering female turning	46167683	0,6
Pre-centering male turning	46167684	1

* Particularly indicated for turning plates

Interface plate for TCi / MCi 150 on APS 140

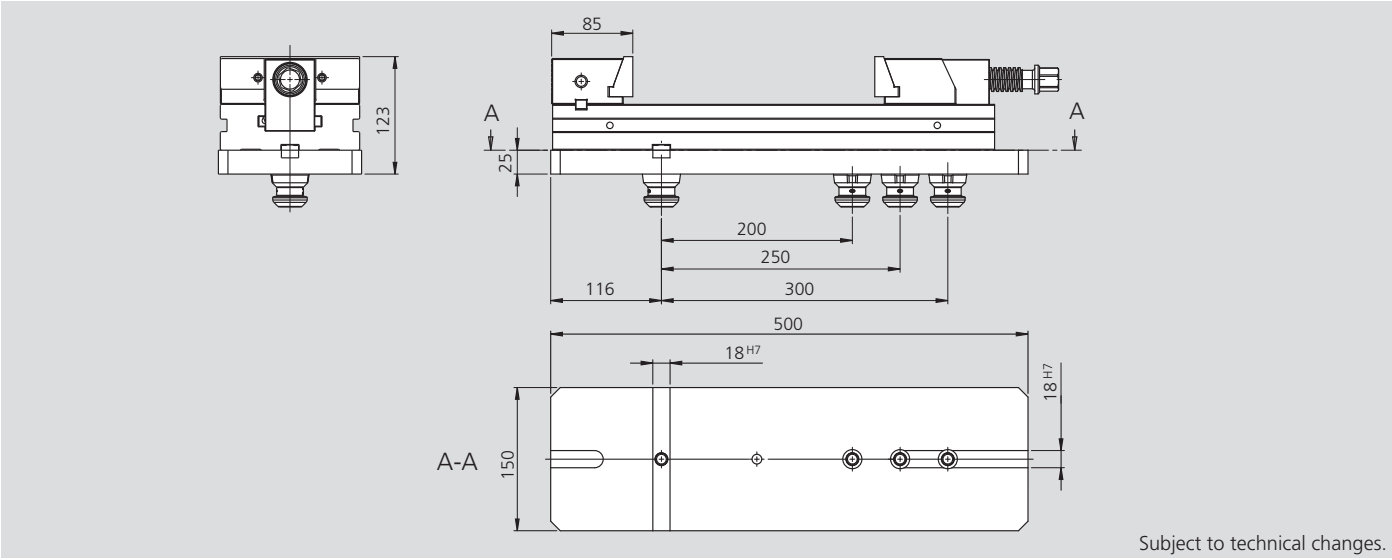

Subject to technical changes.

Order numbers

Type	Id. No.	Weight [kg]
Interface plate for TCi / MCi 150 on APS 140	46167710	14

Note: 2 pieces (1 Type A, 1 Type B) clamping pins included.

Dimensions of standard adaptation for machine tools pallet

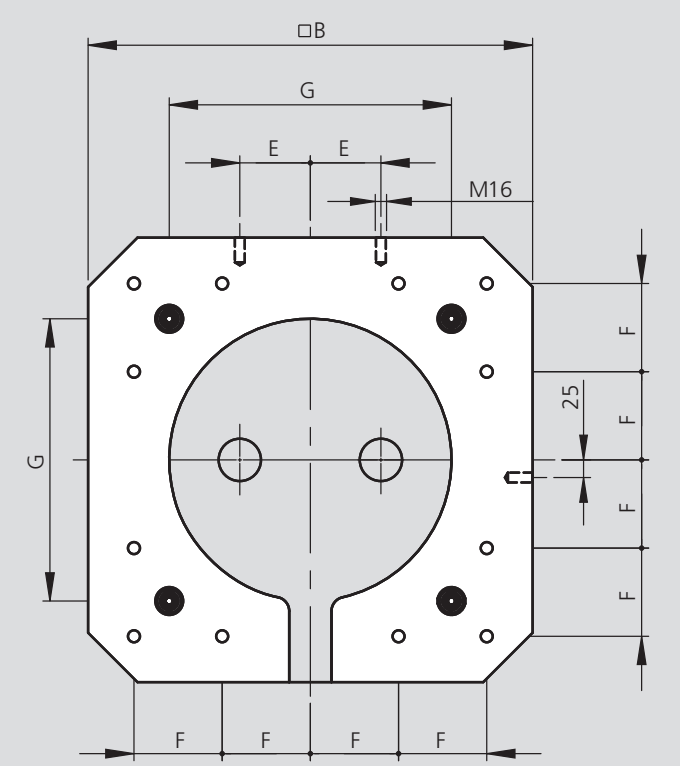

Subject to technical changes.

B [mm]	E [mm]	F [mm]	G [mm]
400	55	80	250
500	75	100	300
630	100	125	420

Manufacturing tolerances

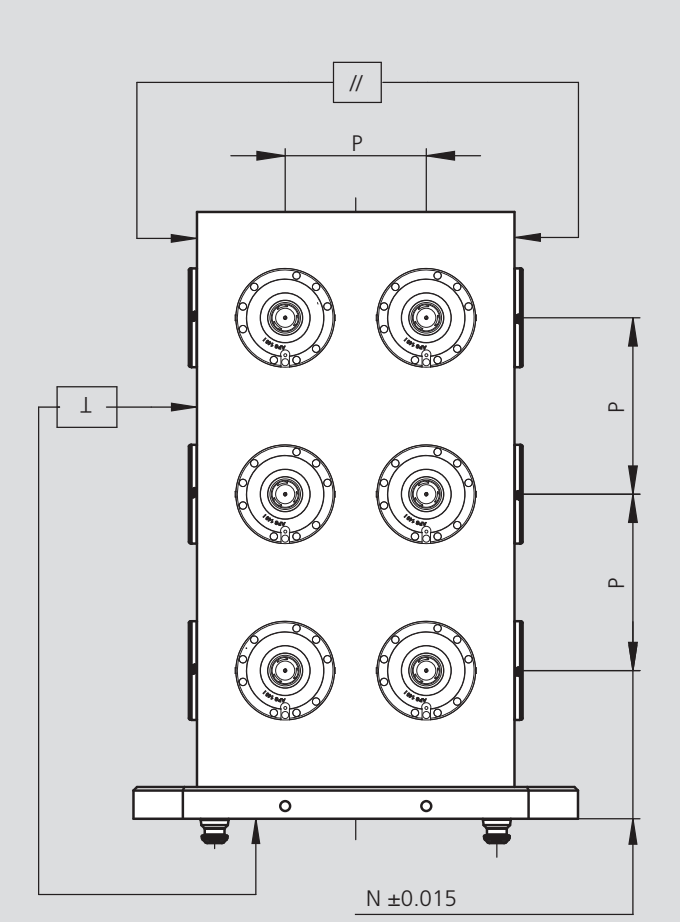

Subject to technical changes.

⊥	//	P
0.02 / 0.035	0.03 / 0.05	± 0.01 / ± 0.02
500 / 1000	500 / 1000	200 / 300

Application examples (Tombstone dimensions, type and number of modules are made according to customer specifications)

Tombstone with 8 APS modules

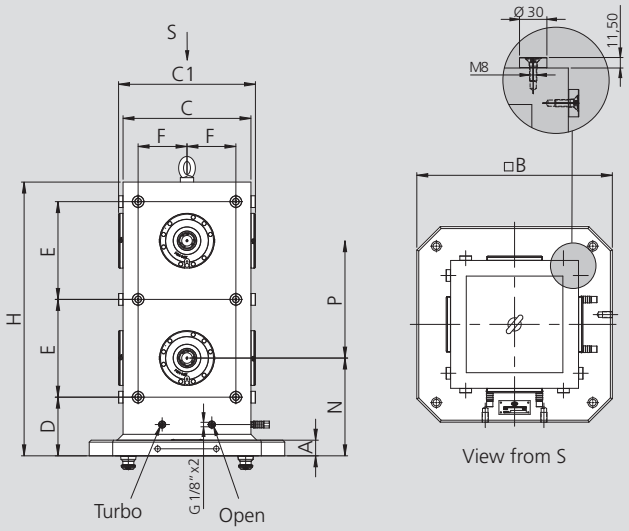

Subject to technical changes.

Tombstone with 24 APS modules

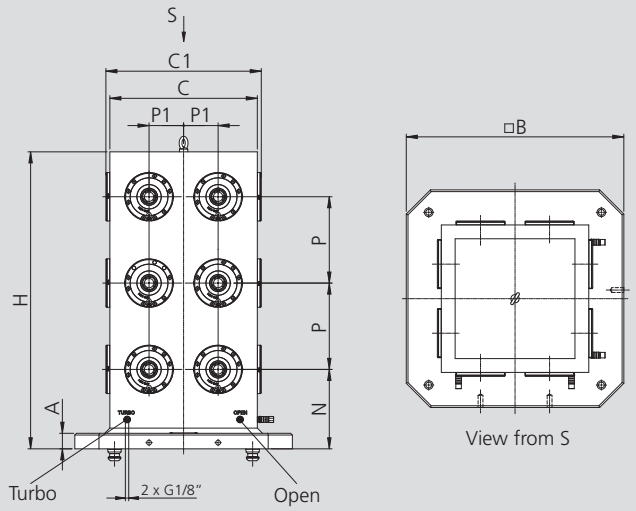

Subject to technical changes.

Tombstone with 12 APS modules

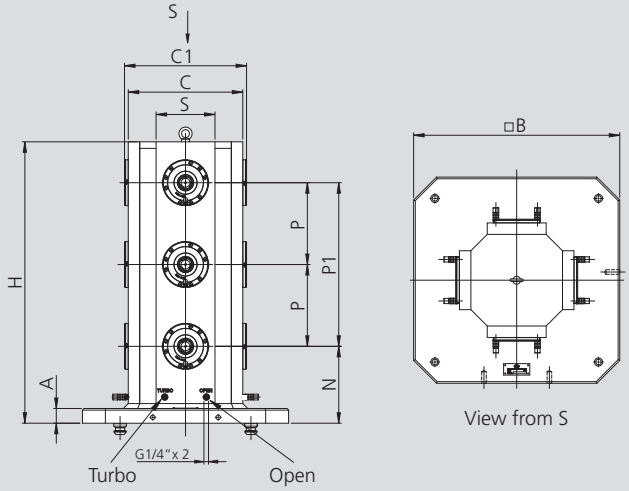

Subject to technical changes.

Tombstone with 6 APS modules

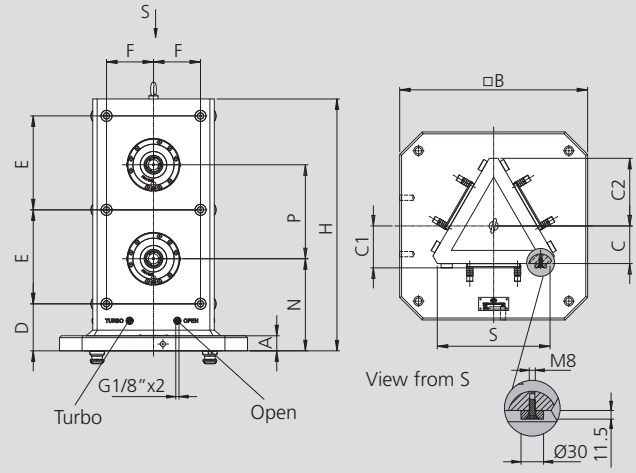

Subject to technical changes.

Crankweb with 8 APS modules

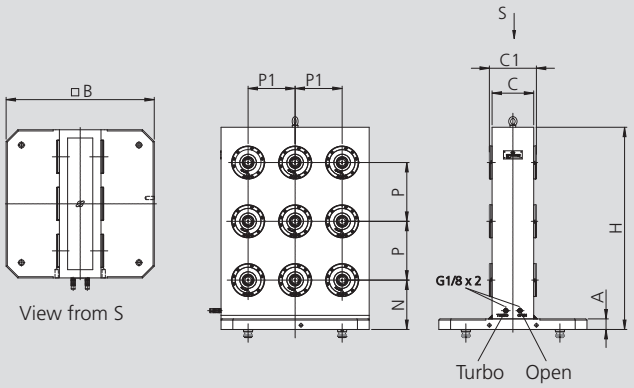

Subject to technical changes.

Tombstones

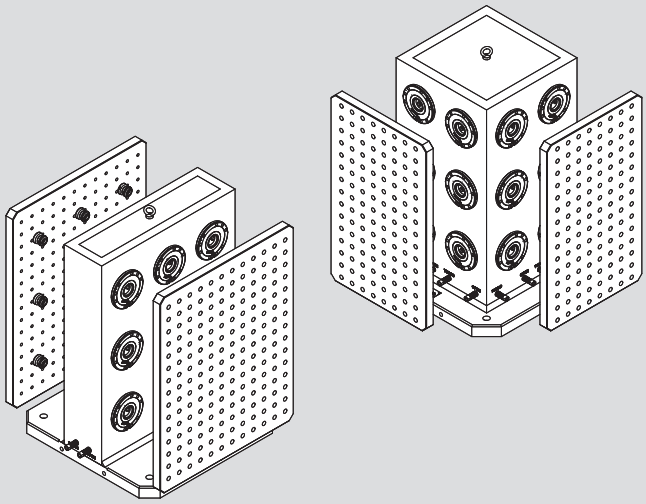

Subject to technical changes.

Tombstones and crankwebs on customer request

APS

- Request form
- Simply fill in and send to:
  www.stationary-workholding.com

Tombstones

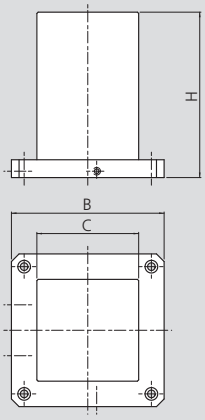

Technical data	
B	mm
C	mm
H	mm

Number of modules	
Modules type	

PREMIUM E open - Turbo	
PREMIUM LIGHT I open - Turbo	
BASIC open	

Cross Tombstones

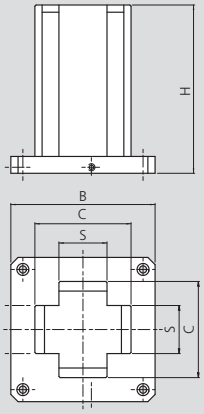

Technical data	
B	mm
C	mm
S	mm
H	mm

Number of modules	
Modules type	

PREMIUM E open - Turbo	
PREMIUM LIGHT I open - Turbo	
BASIC open	

Triangular Tombstones

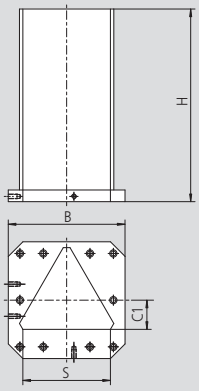

Technical data	
B	mm
C1	mm
S	mm
H	mm

Number of modules	
Modules type	

PREMIUM E open - Turbo	
PREMIUM LIGHT I open - Turbo	
BASIC open	

Crankwebs

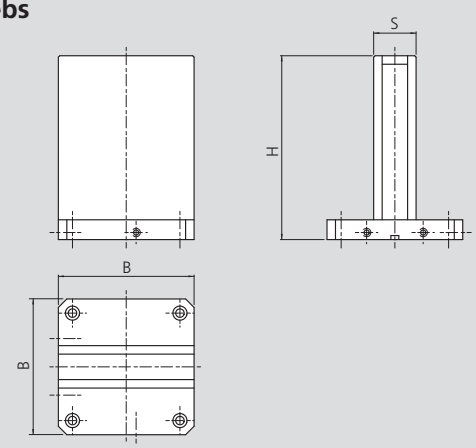

Technical data	
B	mm
S	mm
H	mm

Number of modules	
Modules type	

PREMIUM E open - Turbo	
PREMIUM LIGHT I open - Turbo	
BASIC open	

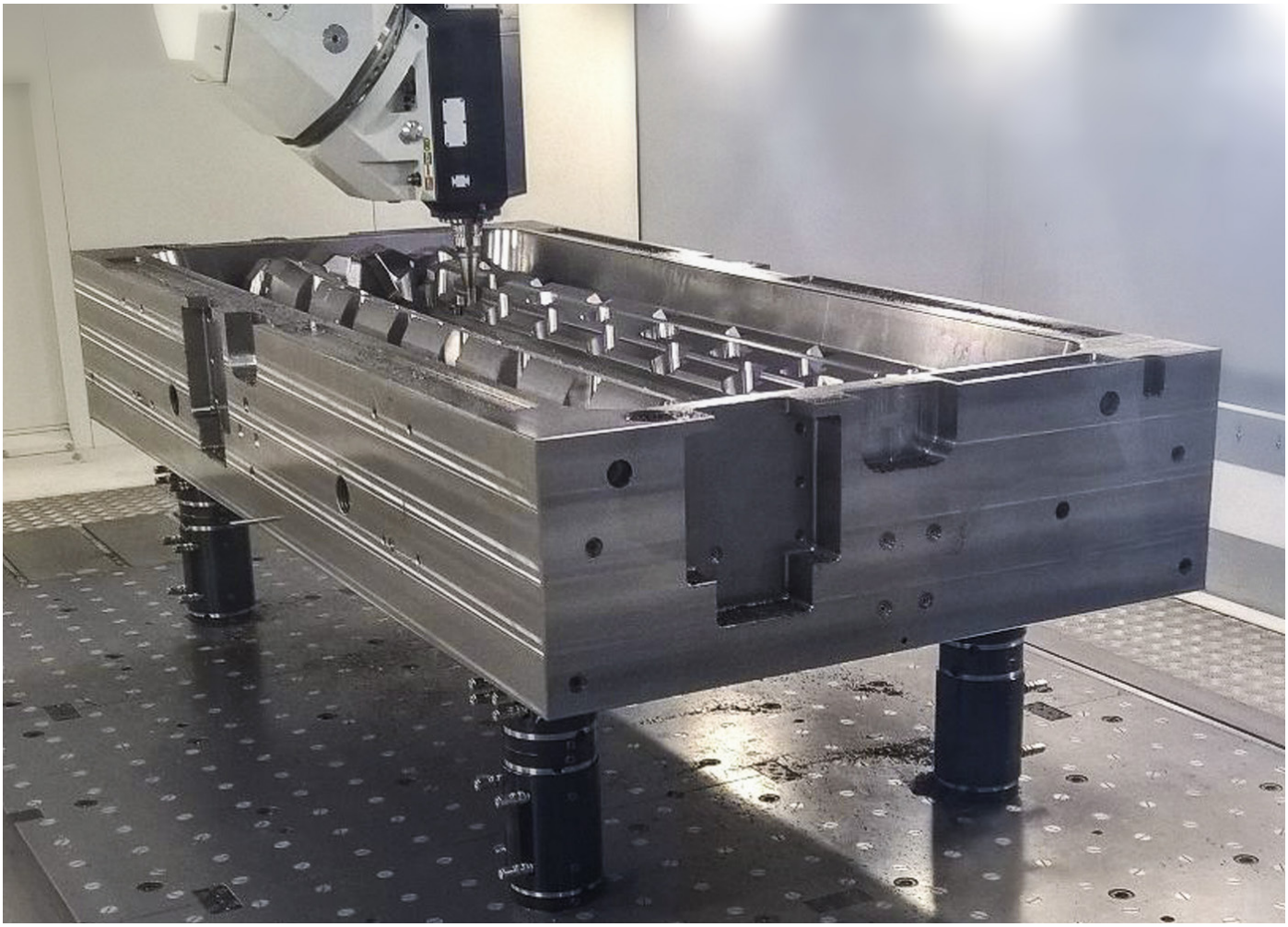

T-nuts set

for clamping unit APS and height extension APS

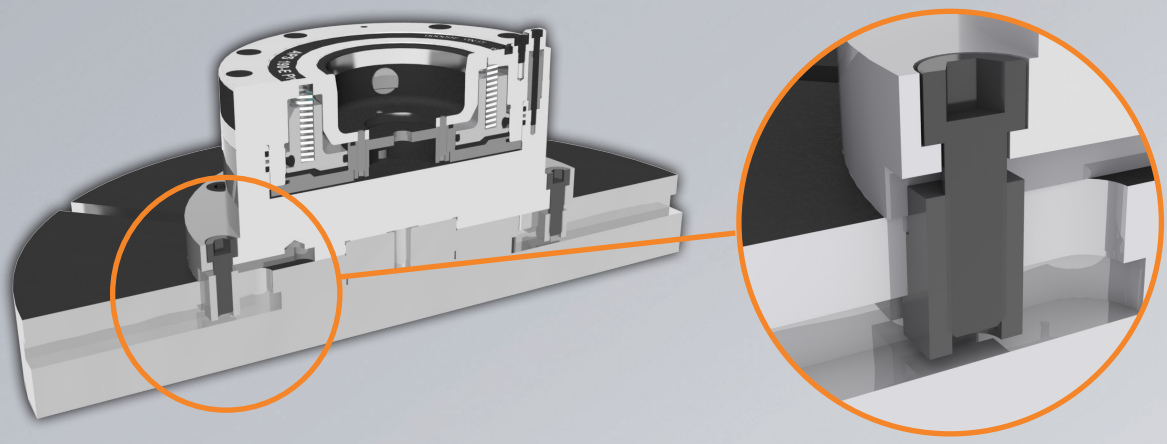

1 Set 9 T-nuts - M10 for clamping unit 4 APS 140

T-SLOT 12
46204100

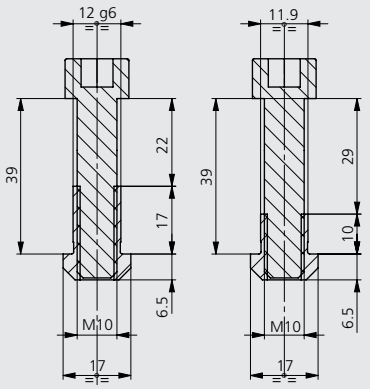

T-SLOT 14
46204101

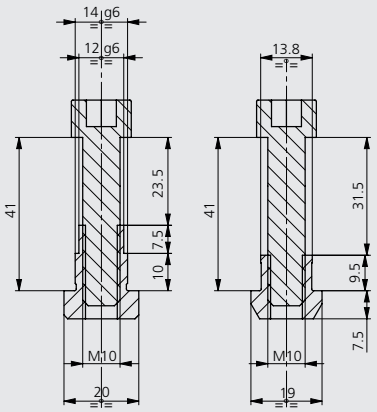

T-SLOT 18
46204102

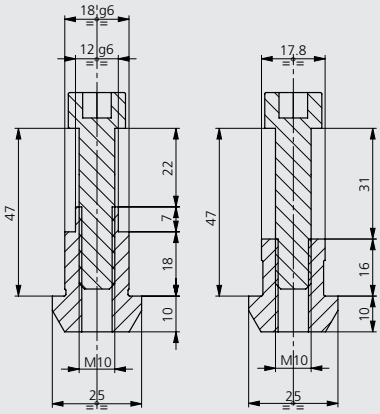

2 Set 8 T-nuts - M10 for APS module

T-SLOT 12
46204103

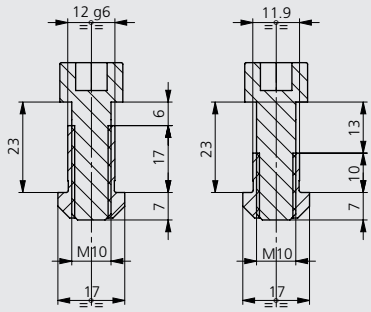

T-SLOT 14
46204104

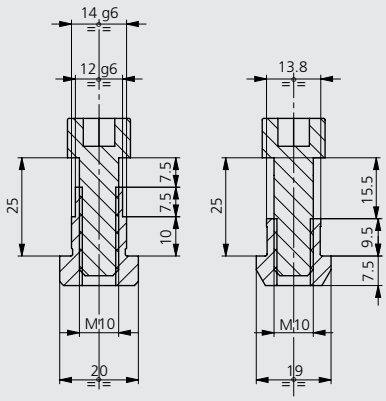

T-SLOT 18
46204105

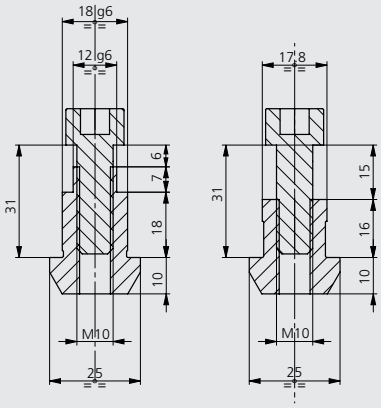

Multi pallet system

■ Connection system for multiple large pallets

Application/customer benefits

- Smart, easy and accurate solution for large pallets
- Any dimension of plates for machine tool tables possible
- Safe and reliable connection between the pallets
- Maintenance free
- Large entry radius of the clamping pins for easy and safe loading

Technical features

- Sealed connecting element
- Media feed through the connecting element

Connecting element for media transfer

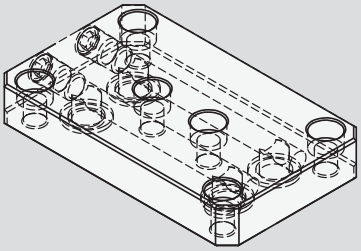

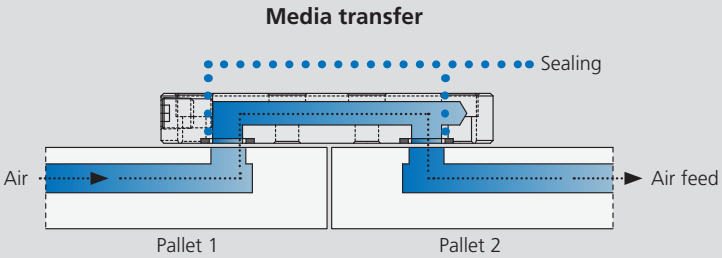

Mechanical connection

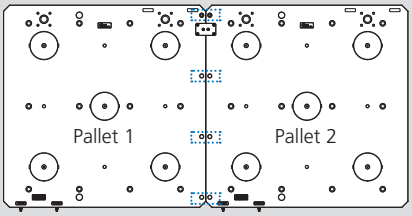

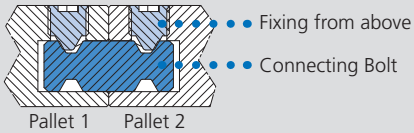

Subject to technical changes.

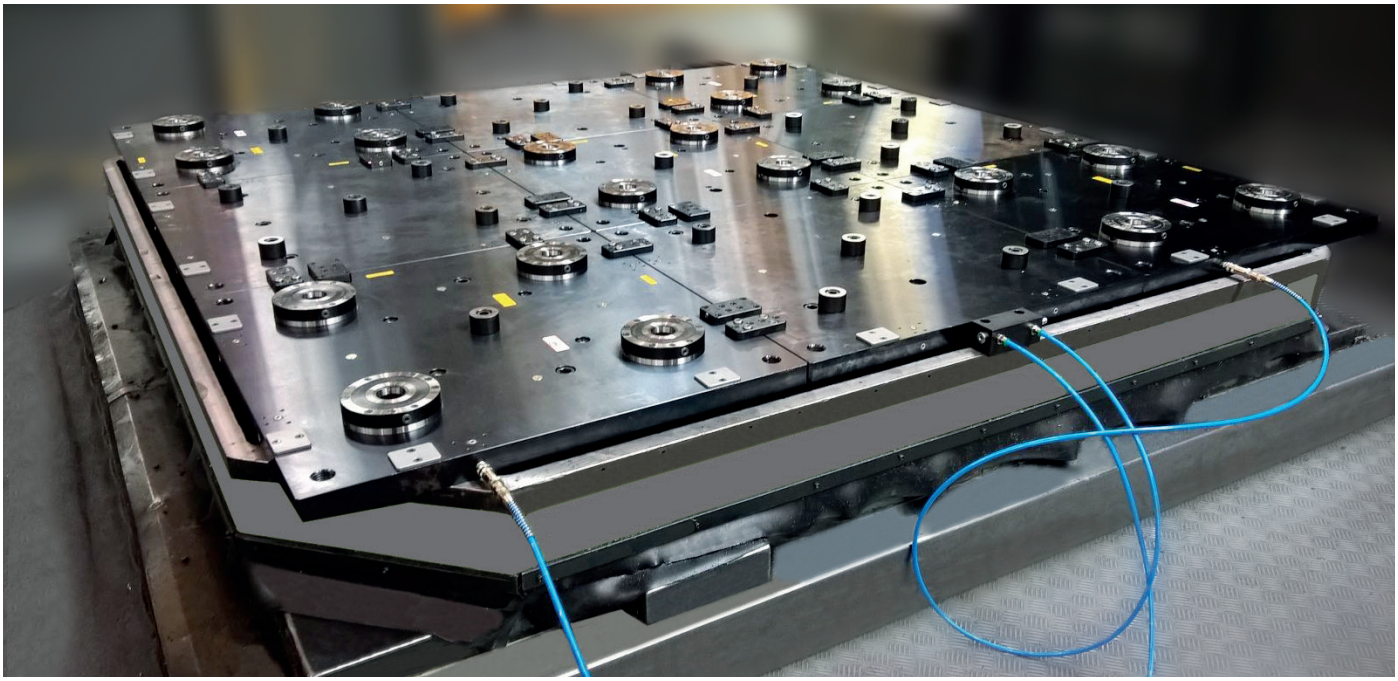

APS Setting Table

SERIES 800

1 Functional Overview of the setting table

- Accurate to within 0.010
- Rotation speed variable between 0 and 3 r.p.m.
- Hand set jogging function with 3 speed selections
- Reduce set up time for loading component to fixture & fixture to machine
- Safety pull cord

Customized setting tables
for fixture & fixture to machine

Model	Table sizes	Max. swing	Max. weight of fixture plate & component	r.p.m.	Voltage
SERIES 800	Ø 800	Ø 1100	1500 kg	0 - 3	220, 240, 380 - 480V
SERIES 1200	Ø 1200	Ø 1700	2000 kg	0 - 3	220, 240, 380 - 480V

Notes

WPS modules

WPS-PPD 12

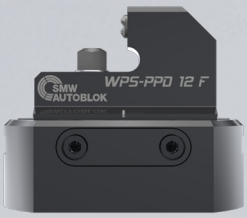

WPS-PPD 12F

WPS-PPD 16 P

WPS-PPD 24

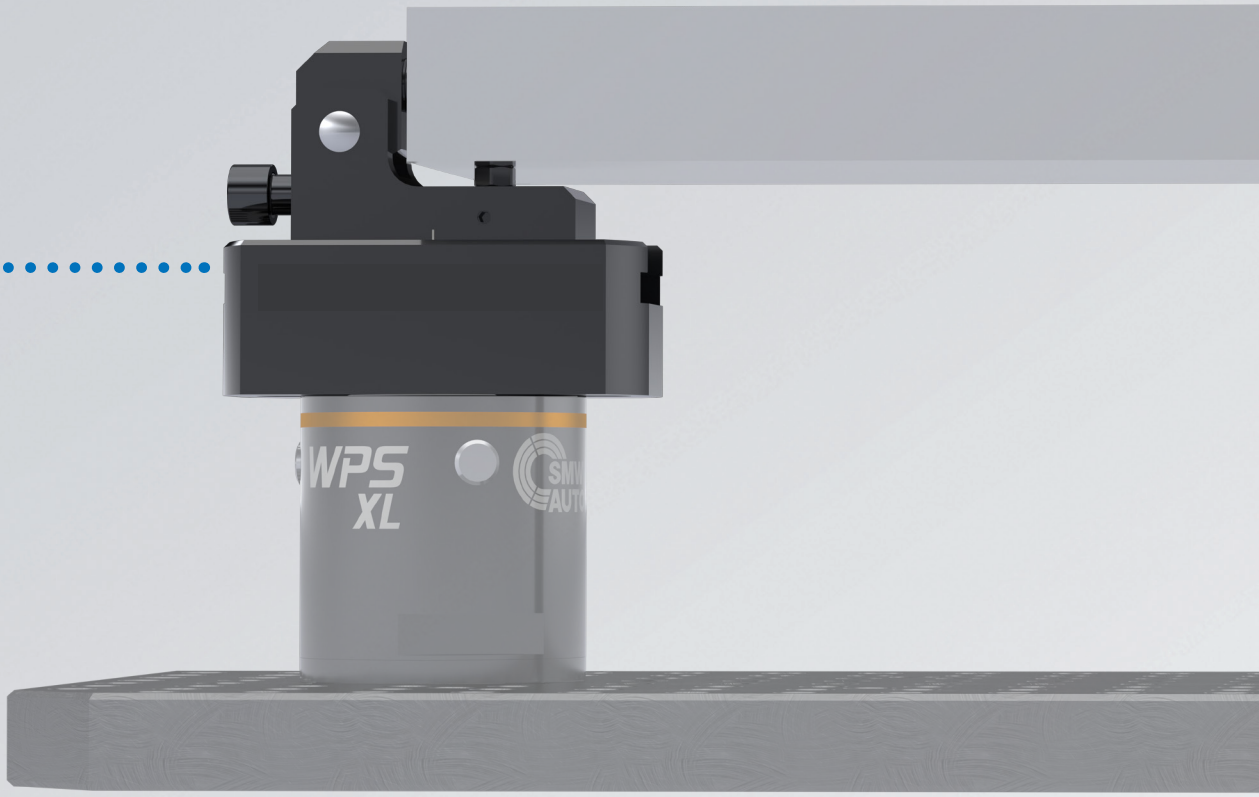

WPS-PPD 24

For heavy machining

For more information, see next page

WPS XL

For heavy machining

Holding force 100 KN

For more information see page 114

WPS Mini, Max / -Index and XL

WPS-PPD

Workpiece preparation device

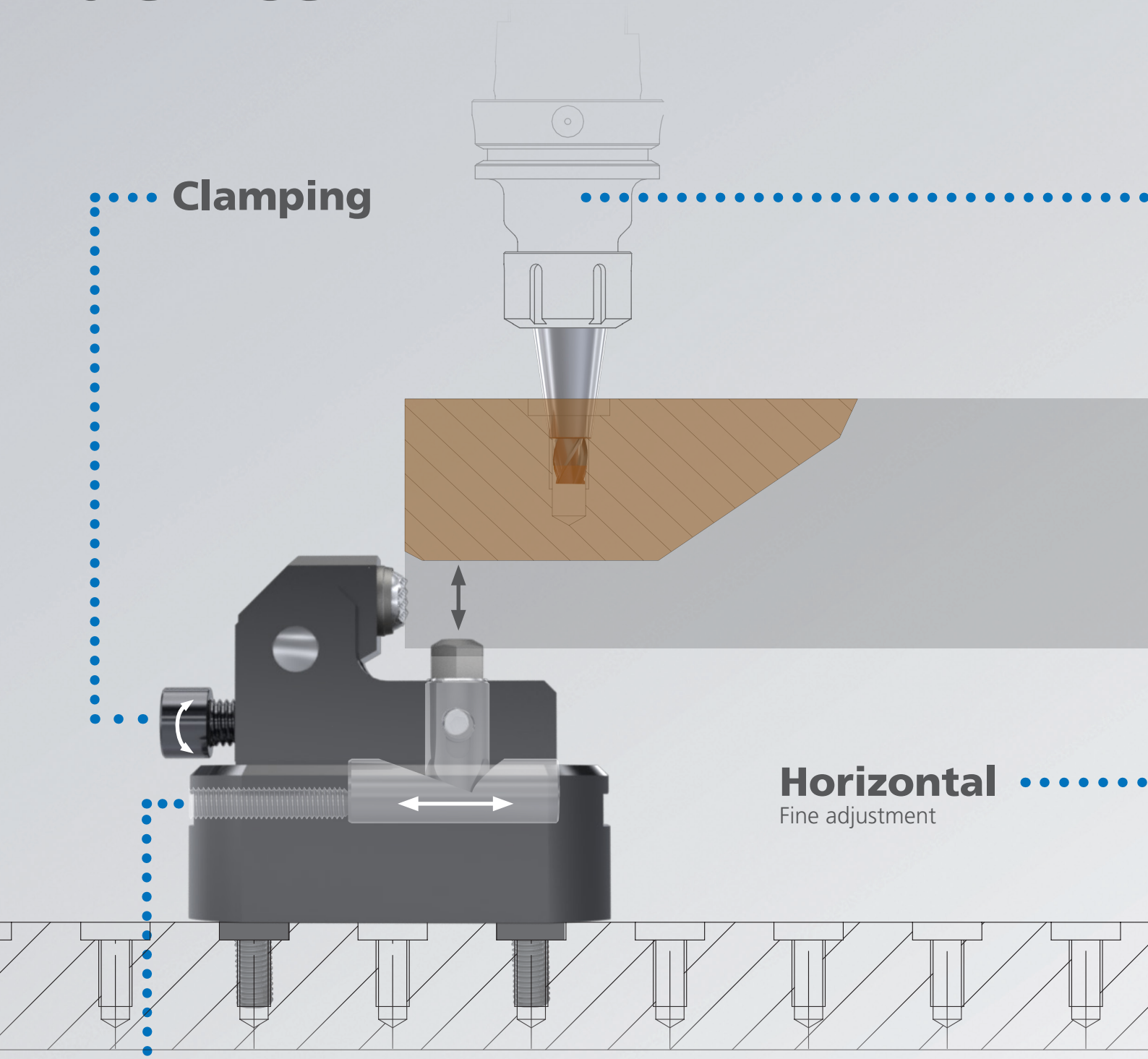

Modularity

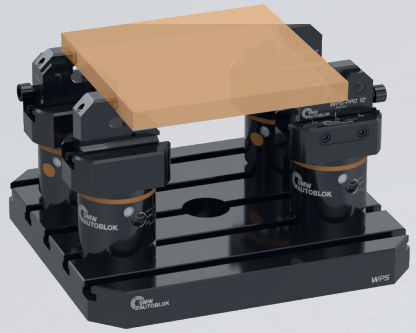

Clamping with / without pendulum
Clamping with / without fixed stop

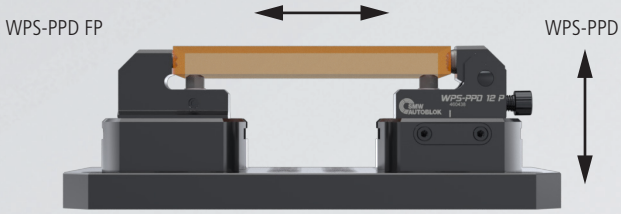

Horizontal fine adjustment / fine adjustment - clamping height

Pendulum feature WPS-PPD P and FP

- Due to the integrades pendulum mechanism, the clamping position adjusts itself
- to the workpiece geometry automatically.
- Therefore, also not angular workpiece areas can be clamped fast and safe.

- Thanks to 4 different pendulum inserts, the clamping devices are very flexible in use.

Pre-machining
for clamping pins for workpiece direct clamping with WPS

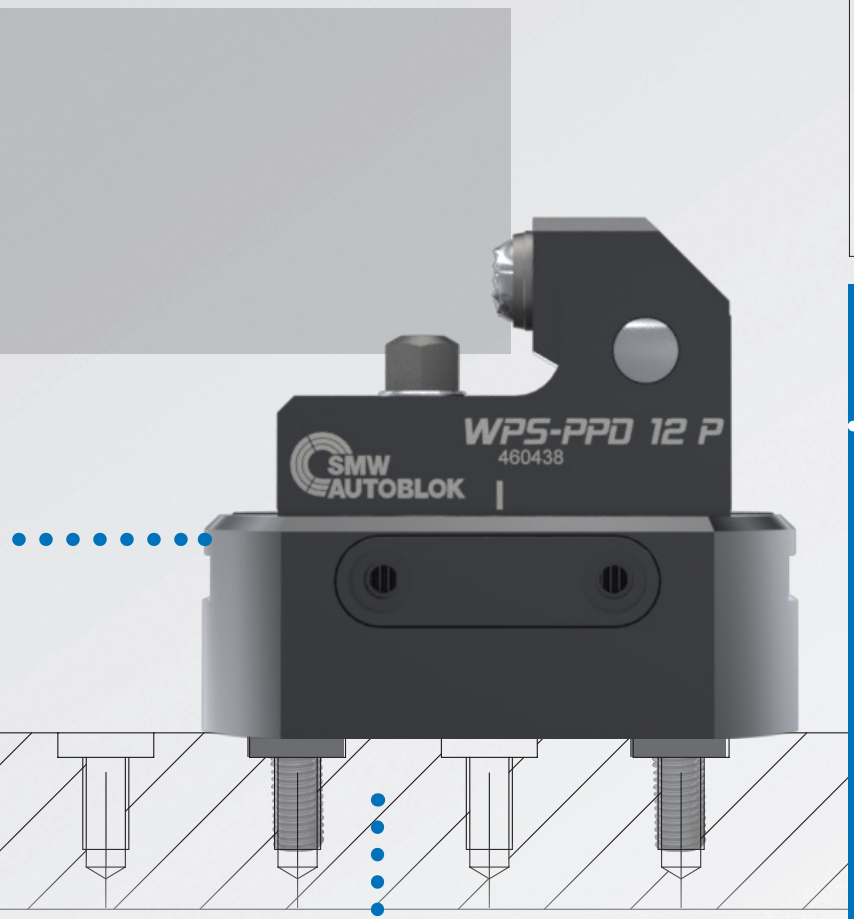

Installation
on grid plate

Workholding glossary

Modularity
Modular system with a wide range of accessories. Compatible with WPS through direct attachment of clamping pins.

Flexible in application
Option 1: Clamping centrically
Option 2: Clamping centrically with pendulum
Option 3: Clamping against fixed stop
Option 4: Clamping against fixed stop with pendulum

Increase in efficiency
Enormous reduction of setup costs by preparing for direct clamping with WPS clamping modules.

WPS-PPD

Workpiece preparation device

■ Ideal for OP 10: preparation of the workpiece for WPS
■ Flexible system

Application/customer benefits

- Ideal for OP 10: preparation of the workpiece for WPS
- Very strong and compact design for best accessibility
- Clamping height of the workpiece adjustable
- Easy and flexible mounting
- Direct interface for grid dimension 40 / 50 / 80 mm and interface for zero point system APS / WPS / ZeroAct as a standard

Technical features

- Manual actuation
- Horizontal position adjustable
- Position lockable clamping
- Pull-down effect
- Different heights for the workpiece support by means of different stop pins
- Fine adjustment of the clamping height

Standard equipment

WPS-PPD with UGE grip insert - carbide without stop pin
WPS-PPD P without pendulum insert and stop pin

WPS-PPD

- Fixed stop without pendulum
- Size 12 / 16 and 24
- Horizontal adjustment

WPS-PPD P

- P = Pendulum insert
- Size 12 / 16 and 24
- Horizontal adjustment

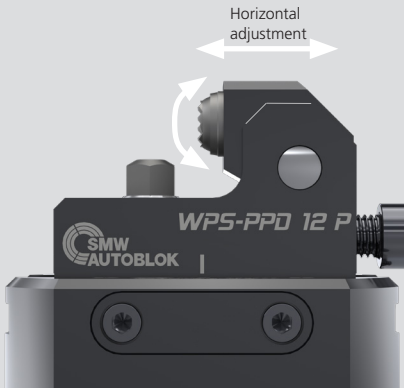

Application example

Clamping with 2 WPS-PPD with fixed grip insert

Required workpiece preparation device:
2x WPS-PPD 12

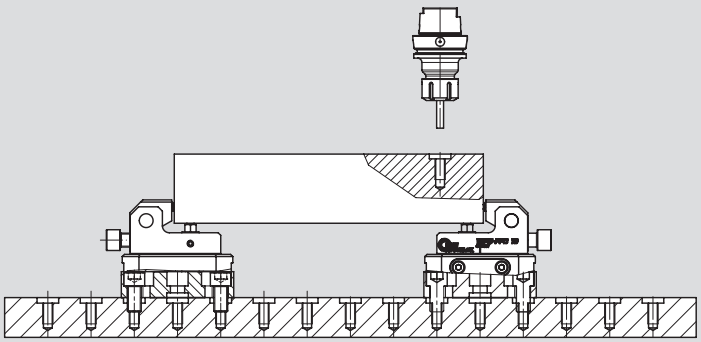

Order review

Type	Id. No.
WPS-PPD 12 workpiece preparation device	460346
WPS-PPD 12 P workpiece preparation device	460430
Stop Pin ALB / X=5 mm (2x)	017603
Pendulum insert gripper	208939

Workpiece preparation device

WPS-PPD

Dimensions and technical data

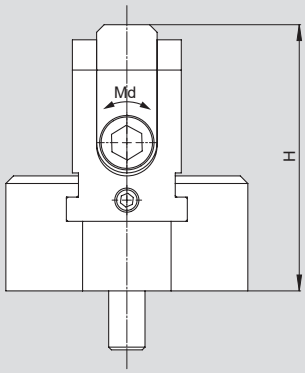

Stop pin not included!

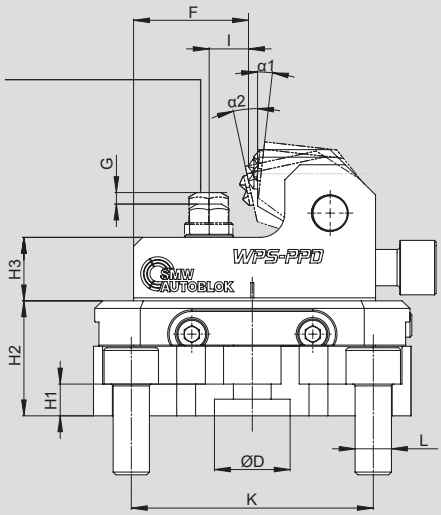

WPS-PPD

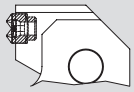

WPS-PPD P

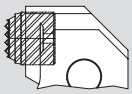

WPS-PPD

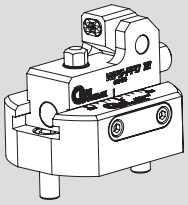

WPS-PPD P

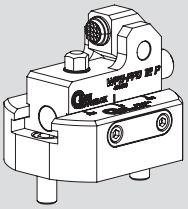

WPS-PPD 24*

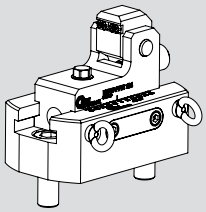

*2 clamping inserts !

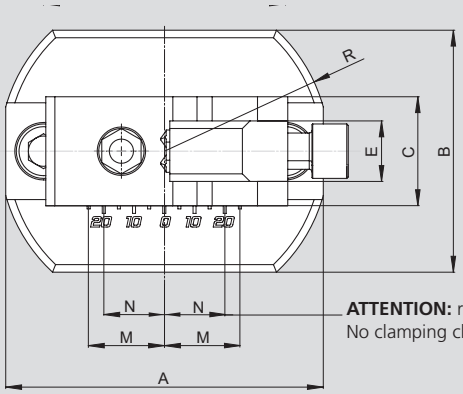

ATTENTION: risk of deformation!
No clamping claw in this area!

SMW-AUTOBLOK Type WPS-PPD		WPS-PPD 12	WPS-PPD 12 P*	WPS-PPD 16	WPS-PPD 16 P*	WPS-PPD 24	WPS-PPD 24 P*
Id. No.		**460346**	**460430**	**460400**	**460431**	**467735**	**467736**
	A	105	105	130	130	210	210
	B	80	80	100	100	120	120
Width base body	**C**	36	36	45	45	64	64
Fit	**D H7**	25	25	25	25	40	40
	E	20	20	25	25	38	38
	F	38	38	53.75	53.75	85.25	78.25
Stroke stop pin	**G**	5	5	7	7	9.5	9.5
Height	**H**	88	88	116	116	168.5	168.5
	H1	10.5	10.5	13.5	13.5	12	12
	H2	38	38	50	50	75	75
	H3	21	21	25	25	47	47
	I	13	13	18.75	18.75	40.25	33.25
Distance min. / max.	**K**	50 - 80	50 - 80	80 - 100	80 - 100	100 - 160	100 - 160
ISO4762-12.9	**L**	M12	M12	M16	M16	M24	M24
Stroke horizontal adjustment	**M**	± 25	± 25	± 33	± 33	± 53	± 53
	N	22.5	22.5	27.5	27.5	50	50
Swinging angle / stroke in mm	**α1°**	6.2	6.2	6.2	6.2	6.2	6.2
Swinging angle / stroke in mm	**α2°**	12	12	12	12	12	12
Angle pendulum	**β°**	-	± 9°	-	± 9°	-	± 9°
Max. total clamping force	kN	20	20	30	30	50	50
Max. actuating torque Md	Nm	40	40	65	65	90	90

*Pendulum inserts not included!

WPS-PPD F/FP

Workpiece preparation device

- Ideal for OP 10: preparation of the workpiece for WPS
- Flexible system

Application/customer benefits

- Ideal for OP 10: preparation of the workpiece for WPS
- Very strong and compact design for best accessibility
- Clamping height of the workpiece adjustable
- Easy and flexible mounting
- Direct interface for grid dimension 40 / 50 mm and interface for zero point system APS / WPS / ZeroAct as a standard

Technical features

- Manual actuation (SW 10)
- Horizontal position adjustable (0-50 mm)
- Position lockable clamping
- Pull-down effect
- Different heights for the workpiece support by means of different stop pins
- Fine adjustment of the clamping height

Standard equipment

WPS-PPD with UGE grip insert - carbide without stop pin
WPS-PPD without pendulum insert and stop pin

WPS-PPD F

- F = Fixed stop with UGE grip insert
- Size 12 and 16
- Horizontal adjustment

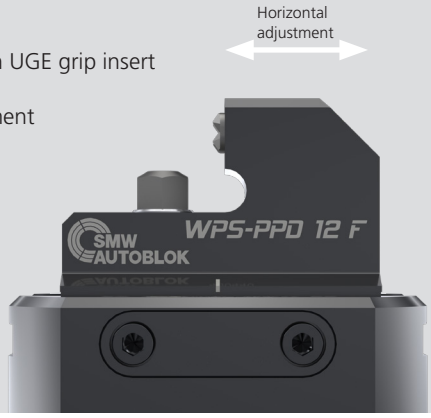

WPS-PPD FP

- FP = Fixed stop with pendulum grip insert
- Size 12 and 16
- Horizontal adjustment

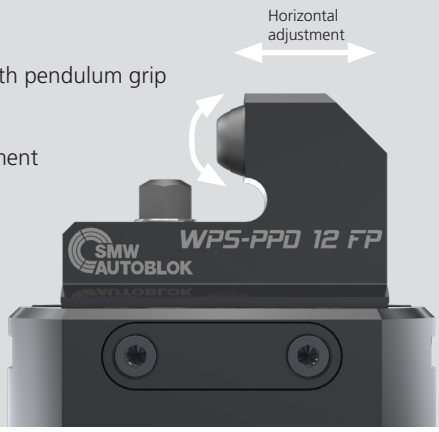

Application example

Clamping with 1 WPS-PPD with fixed grip insert against fixed stop WPS-PPD 12 F

Required workpiece preparation device:
1x WPS-PPD 12 + 1x WPS-PPD 12 F

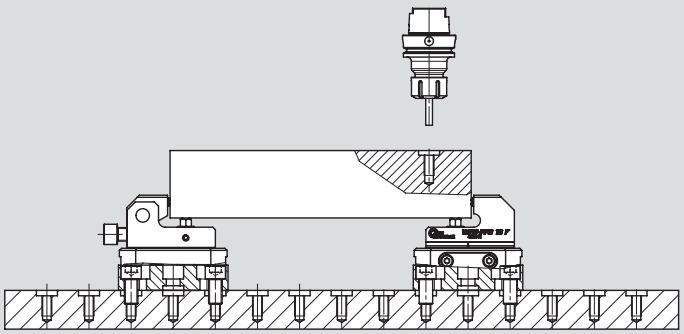

Order review

Type	Id.-No.
WPS-PPD 12 workpiece preparation device	460346
WPS-PPD 12 FP workpiece preparation device	460434
Stop pin ALB / X=5 mm (2x)	017603
Pendulum insert gripper	208939

Workpiece preparation device

WPS-PPD F/FP

Dimensions and technical data

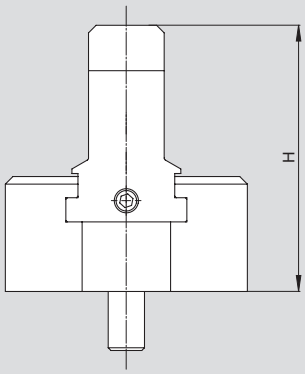

Stop pin not included!!

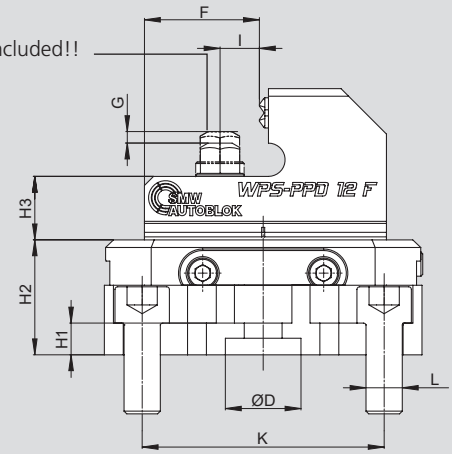

WPS-PPD F

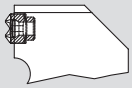

WPS-PPD FP

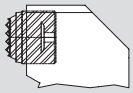

WPS-PPD F

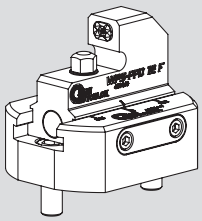

WPS-PPD FP

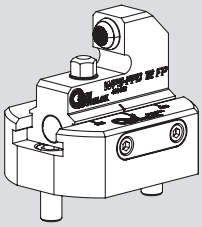

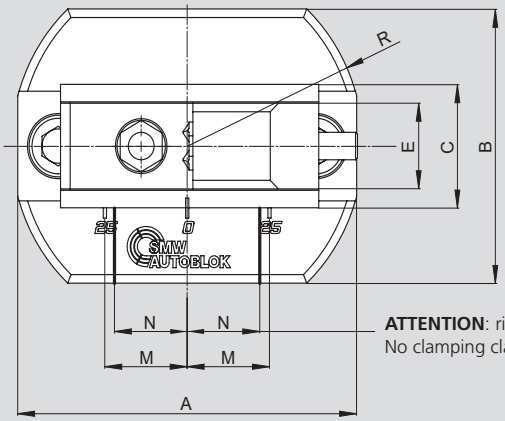

ATTENTION: risk of deformation!!
No clamping claw in this area!

Subject to technical changes.

SMW-AUTOBLOK Type WPS-PPD		WPS-PPD 12 F	WPS-PPD 12 FP*	WPS-PPD 16 F	WPS-PPD 16 FP*
Id. No.		**460432**	**460434**	**460433**	**460435**
	A	105	105	130	130
	B	80	80	100	100
Width base body	**C**	36	36	45	45
Fit	**D H7**	25	25	25	25
	E	25	25	30	30
	F	38	38	53.75	53.75
Stroke stop pin	**G**	5	5	7	7
Height	**H**	88	88	116	116
	H1	10.5	10.5	13.5	13.5
	H2	38	38	50	50
	H3	21	21	25	25
	I	13	13	18.75	18.75
Distance min. / max.	**K**	50 - 80	50 - 80	80 - 100	80 - 100
Screw ISO4762-12.9	**L**	M12	M12	M16	M16
Stroke horizontal adjustment	**M**	± 25	± 25	± 33	± 33
	β°	-	± 9°	-	± 9°
Max. load force	**kN**	20	20	30	30

*Pendulum inserts not included!!

Adaption ring Ø 25(g6) for positioning WPS-PPD 12,16 and 24 on module grid plate - reduction to [Ø] fitting diameter

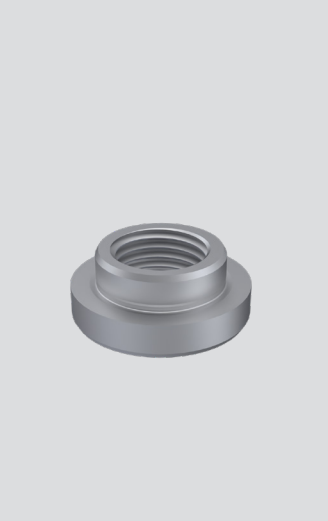

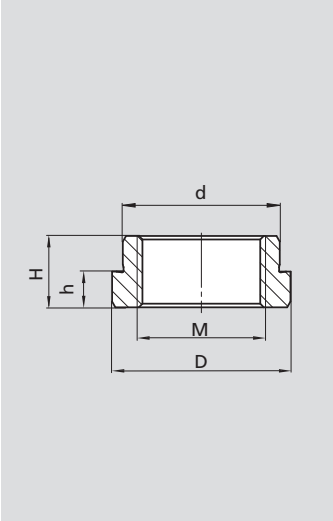

Adaption ring Ø		Dimensions			Id.No.
D (g6)	d (g6)	M	H	h	
Ø 25	Ø 16	M14x1,5	10	5	460177
Ø 25	Ø 18	M14x1,5	10	5	460135
Ø 25	Ø 20	M18x1,5	10	5	460136
Ø 25	Ø 22	M18x1,5	10	5	460137
Ø 25	Ø 24	M18x1,5	10	5	460138
Ø 25	Ø 25	M18x1,5	10^0	0,8	460139
Ø 40	Ø 25	M18 x 1,5	12	6	467680
Ø 40	Ø 30	M24 x 1,5	12	6	467681
Ø 40	Ø 34	M28 x 1,5	12	6	467682
Ø 40	Ø 36	M28 x 1,5	12	6	467683
Ø 40	Ø 40	M28 x 1,5	12	0,8	467684

Stop pins, Pendulum insert and UGE-10 grip insert for WPS-PPD

Stop pin

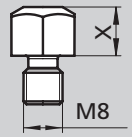

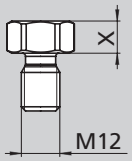

Type for WPS-PPD 14 / 16	Id. No.
Stop pin ALB / X=5 mm	017603
Stop pin ALB / X=10 mm	016514
Stop pin ALB / X=15 mm	016515
Stop pin ALB / X=20 mm	016516
Stop pin ALB / X=25 mm*	081191

Type for WPS-PPD 24	Id. No.
Stop pin ALB / X=10 mm	210058
Stop pin ALB / X=15 mm	210060
Stop pin ALB / X=20 mm	210061
Stop pin ALB / X=25 mm	210062
Stop pin ALB / X=30 mm	210063

*only suitable for WPS-PPD 16P/16 FP!

Pendulum insert

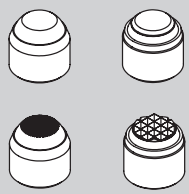

Type for WPS-PPD 14 / 16	Id. No.
Pendulum insert smooth	208937
Pendulum insert Pom-Insert	208938
Pendulum insert gripper	208939
Pendulum insert HM-Gripper	208940

Type for WPS-PPD 24	Id. No.
Pendulum insert smooth	212414
Pendulum insert Pom-Insert	212421
Pendulum insert gripper	211167
Pendulum insert HM-Gripper	210731

UGE-10

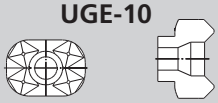

Type for WPS-PPD F	Id. No.
Fixed UGE-10 grip insert	081845F

*Pendulum insert not included

Clamping pin

Type A

Clamping pin with thread **M12 / M16 / M24**

Type	Thread	Type A Id. No.
Clamping pin WPS	M12	46162355
Clamping pin WPS	M16	46162455
Clamping pin for WPS-PPD 24	M24	467625

Clamping bar for WPS-PPD

- Ideal for OP 10: Preparation of the workpiece for WPS
- Flexible system

WPS-PPD

Workpiece preparation device

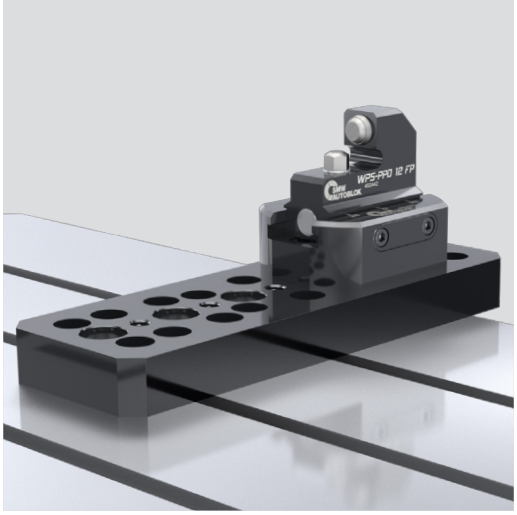

Application/customer benefits

- Easy and flexible use of WPS-PPD direct clamping devices
- Fine adjustment on T-slot tables
- Mounting of WPS-PPD on grid plates between two row of holes possible
- Protected against corrosion
- Very strong version
- Undrilled version for customized finish machining

Standard equipment

Clamping bar WPS-PPD

Options:

Clamping bar WPS-PPD 300 (460447) (drilled)

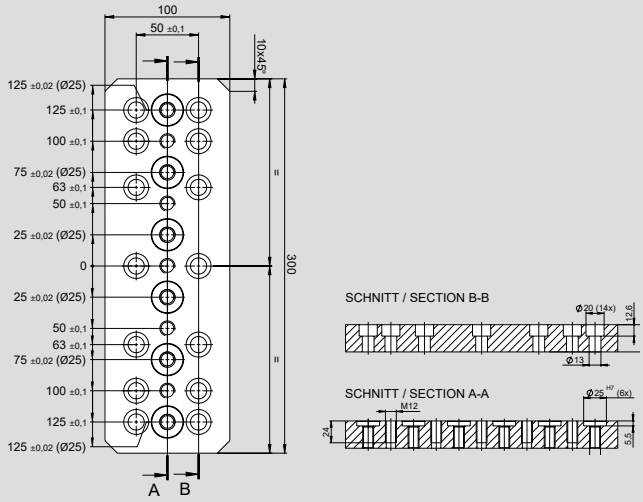

Clamping bar WPS-PPD 300 (460448) (undrilled)

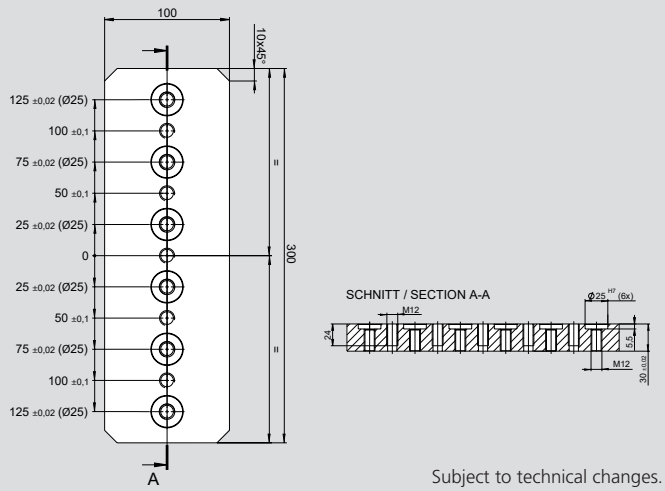

Subject to technical changes.

Clamping bar WPS-PPD 300 (467174) (drilled)

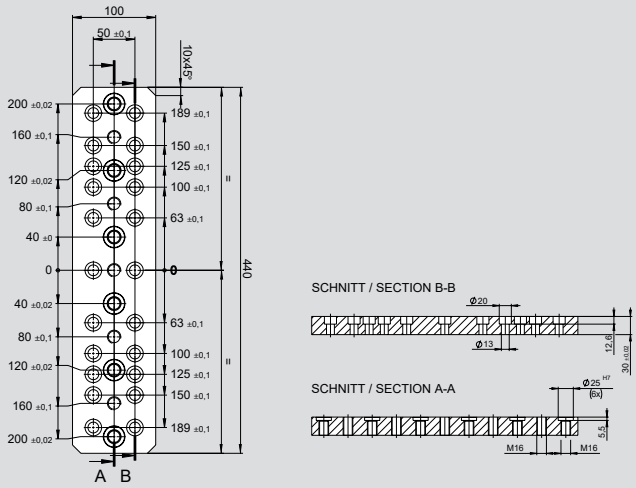

Clamping bar WPS-PPD 300 (467173) (undrilled)

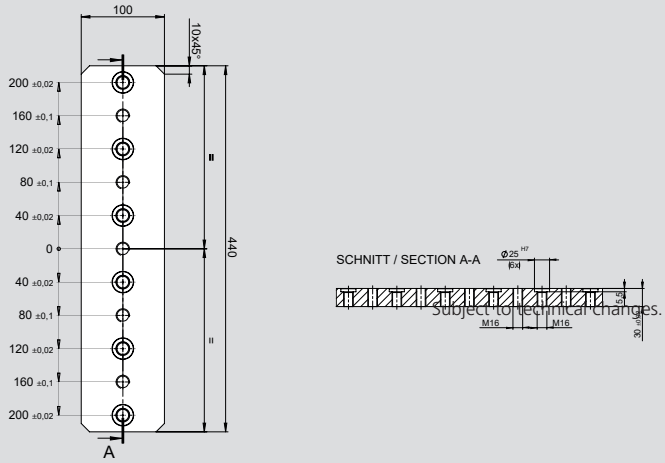

Subject to technical changes.

Order review

SMW-AUTOBLOK	WPS-PPD clamping bar (drilled)		WPS-PPD clamping bar (undrilled)	
Type	300	440	300	440
Id. No.	460447	467174	460448	467173

WPS-PPD

Workpiece preparation device

Application example

■ WPS-PPD width WPS max

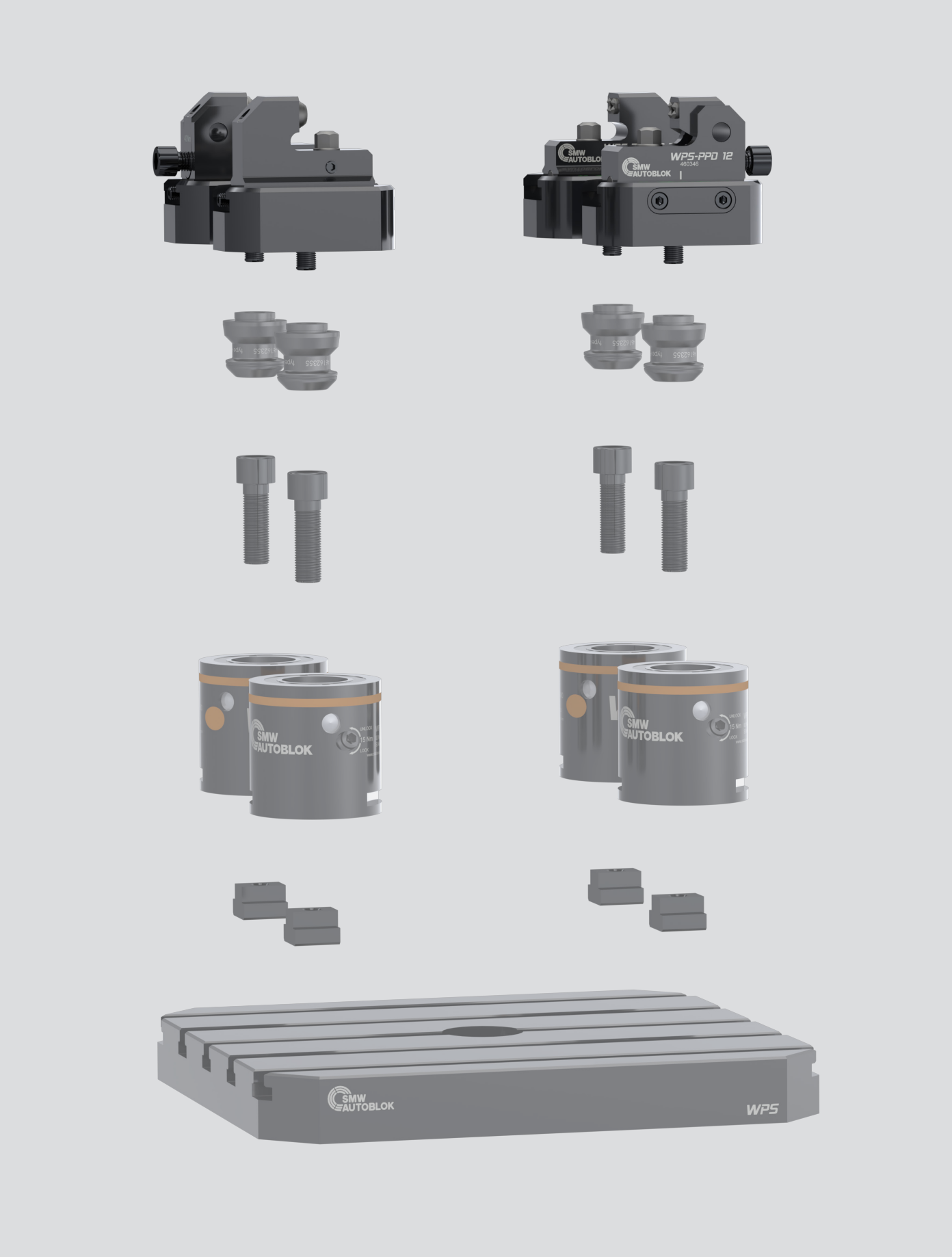

Notes

WPS

Workpiece positioning system

WPS mini

available as **flange module 80-40 and 40-40 mm** (see page 90).

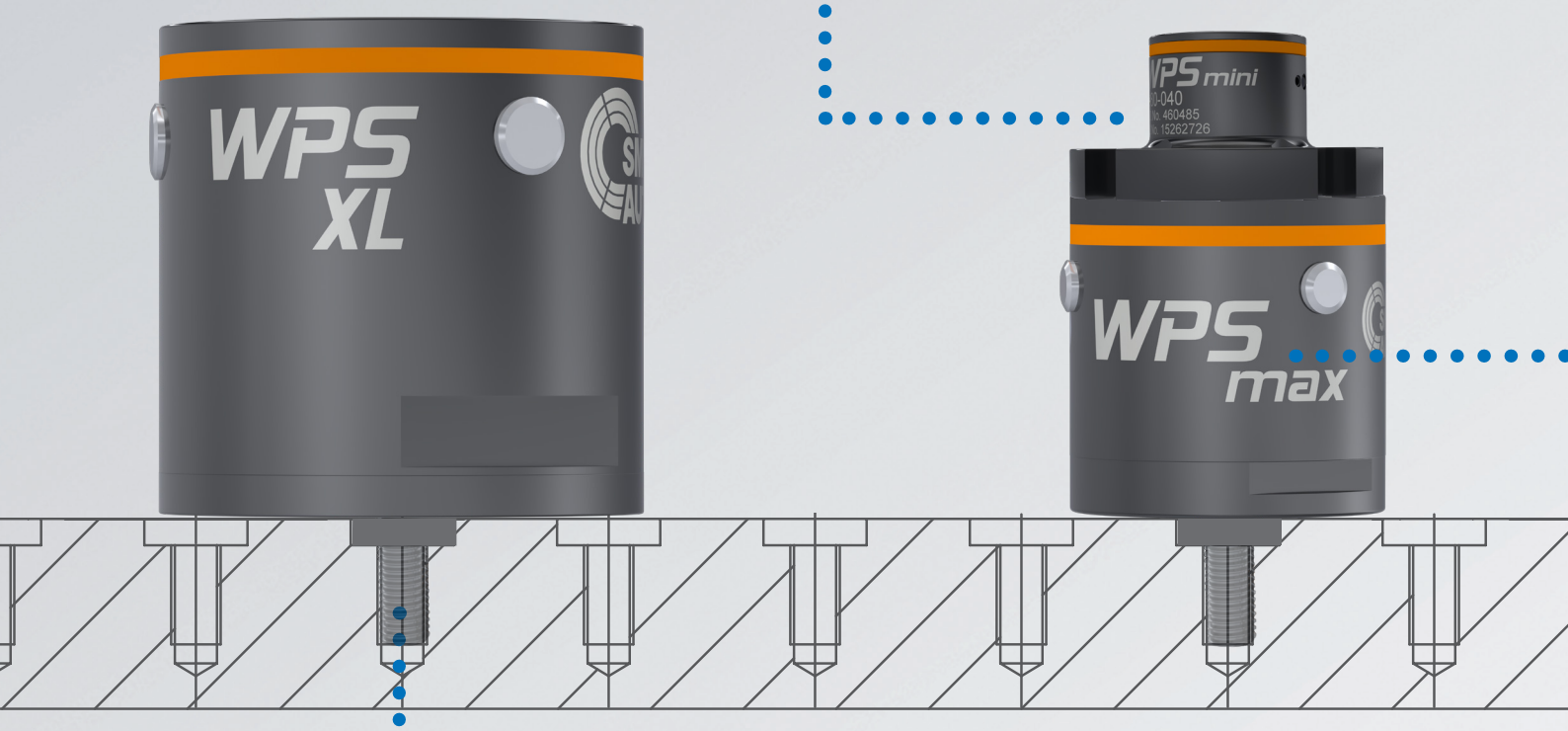

WPS XL

available in different sizes:
60, 100, 140, 200 mm (see page 118).

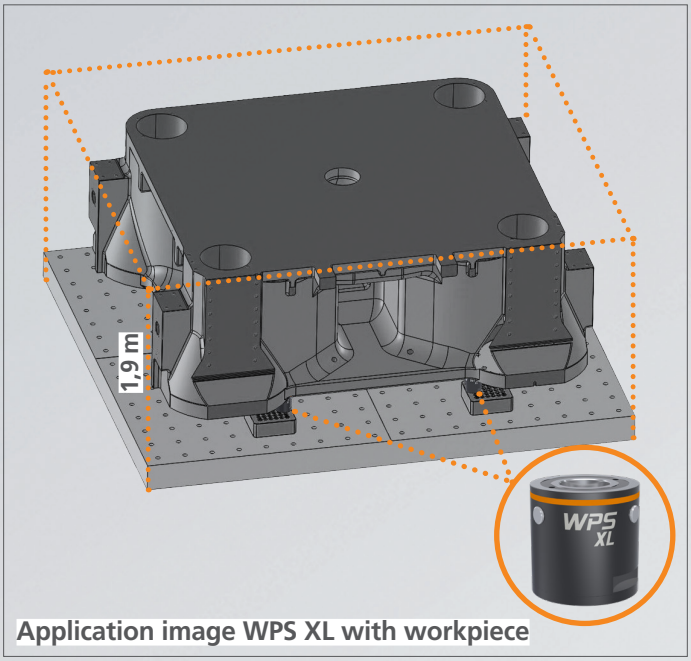

Application image WPS XL with workpiece

Modularity

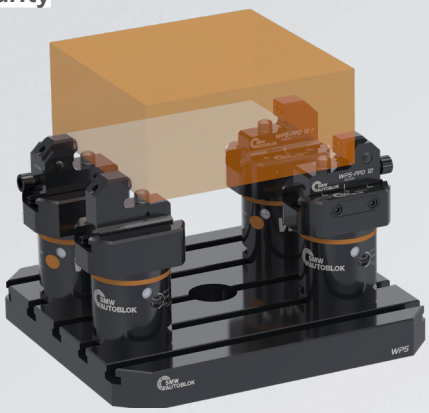

Modular system

WPS XL, WPS max and WPS mini: Can be used for different applications. Available in different sizes.

WPS max

available in different sizes:
40, 60, 80, 100, 120, 160 mm
(see page 118).

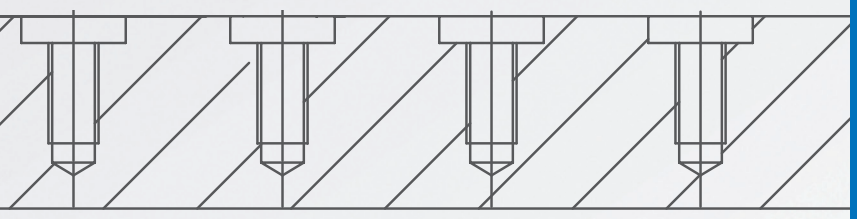

Workholding glossary

Modularity
Modular system with a wide range of accessories ensures the flexible clamping of nearly every workpiece geometry. Furthermore, the clamping pins are interchangeable to the proven zero point clamping system APS.

High-precision positioning
The precise taper / face support ensures the interlocking and safe clamping with highest holding forces and maximum rigidity.

Maintenance-free
Clamping modules are hermetic sealed, therefore low maintenance. The availability of the machine is increased.

Increased in efficiency
Huge reduction of the set-up times and maximum efficiency. No other clamping devices are necessary

5-axis machining
Optimal accessibility, ideal for
5-axis machining without interfering contours.

WPS mini

Workpiece positioning system

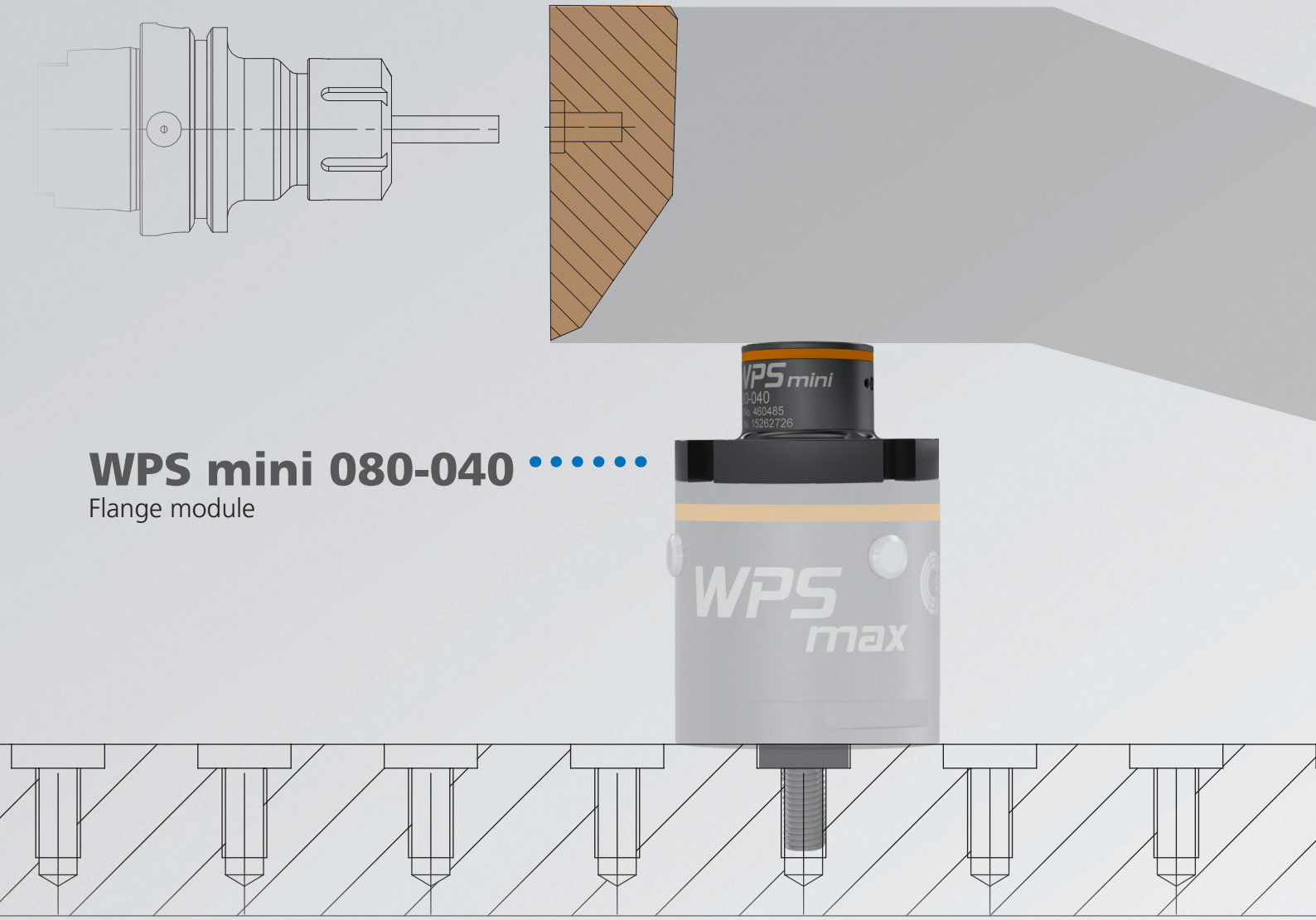

WPS mini 080-040
Flange module

WPS mini
available as **flange module 080-040** and **040-040 mm**

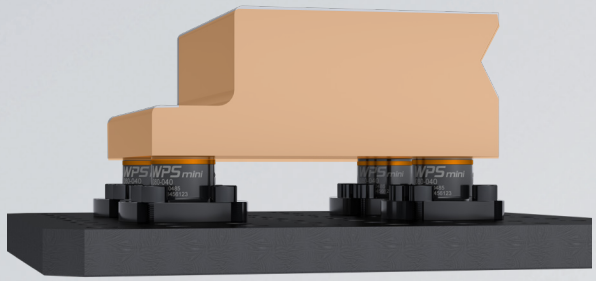

1. application example
Workpiece machining with WPS mini flange module

2. application example
Workpiece machining with WPS mini

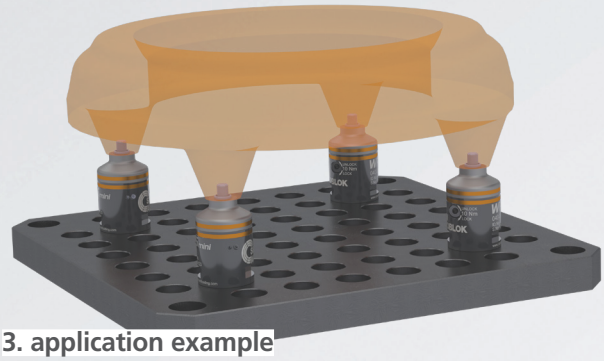

3. application example
Workpiece machining with WPS mini + reducing adapter

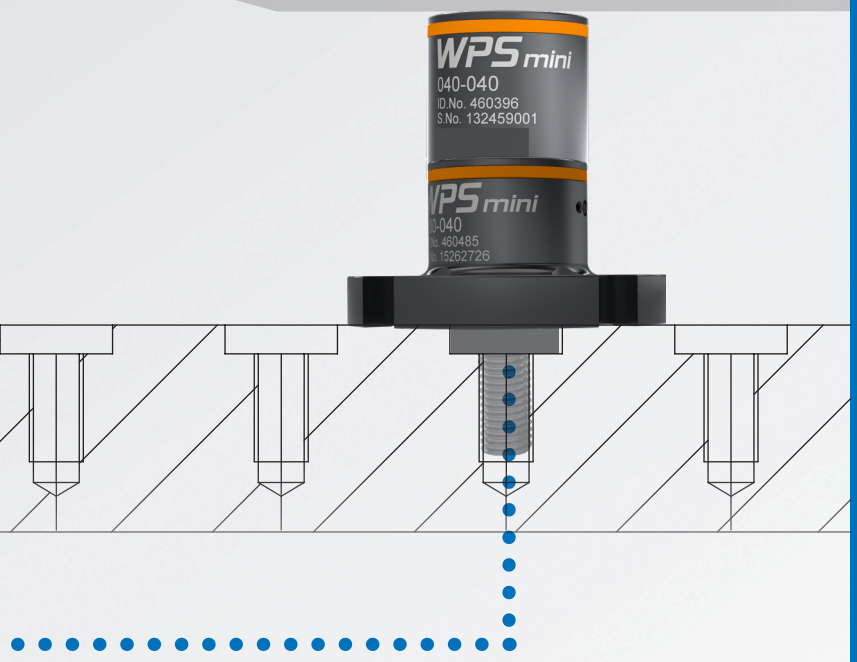

Workholding glossary

Modularity
Modular system with a wide range of accessories ensures the flexible clamping of nearly every workpiece geometry. Furthermore, the clamping pins are interchangeable to the proven zero point clamping system APS.

High-precision positioning
The precise taper / face support ensures the interlocking and safe clamping with highest holding forces and maximum stiffness.

Maintenance-free
Clamping modules are hermetic sealed, therefore low maintenance. The availability of the machine is increased.

Increased in efficiency
Huge reduction of the set-up times and maximum efficiency. No other clamping devices are necessary

5-axis machining
Optimal accessibility, ideal for
5-axis machining without interfering contours.

WPS mini

Mounting option

REDUCING ADAPTER (optional)
for connection to the workpiece
(different variants)

WPS Mini clamping module 040-040
(different module variants)

Mounting screw

WPS Mini FLANGE MODULE 080-040
(different module variants)

Adaptation ring (optional)

Grid plates
(different variants)

Clamping pin Basic WPS mini
(different variants)

WPS Mini flange module 080-040
(different module variants)

Clamping pin Basic
(different variants)

Reducing washer (460205)

Clamping module WPS max
(different module variants)

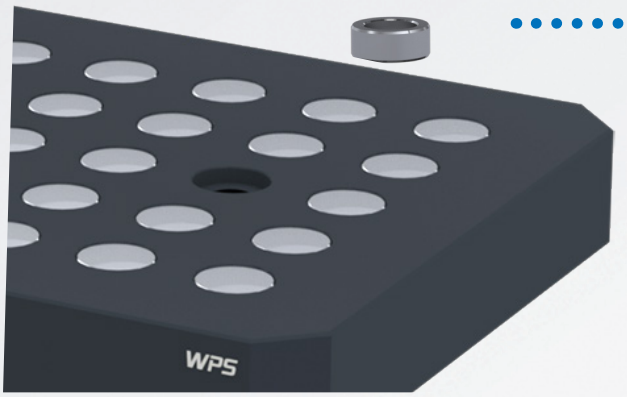

Adaption ring (optional)
for positioning on grid plate
(different variants)

WPS Mini

Workpiece positioning system

Manual zero point clamping system - Flange module

- Single quick-actuation for the rapid opening and closing
- Fully sealed

Application/customer benefits

- Huge reduction of set-up times for highest efficiency
- Safe workpiece clamping with maximum holding forces and highest repeatability
- Ideal for 5-axis machining
- Central quick actuation (270° rotation)
- Flexible configurations for customized use
- To adapt WPS Mini 040 on WPS max

Technical features

- Diameter 80 / 40 mm, Height 40 mm
- Pull-down force 2.5 kN
- Max. torque 10 Nm
- Repeatability < 0.005 mm
- Holding force 25 kN (mounting screw M10 - 12.9)
- **proofline®** = fully sealed - low maintenance

Standard equiment

- WPS mini with mounting bolt M10

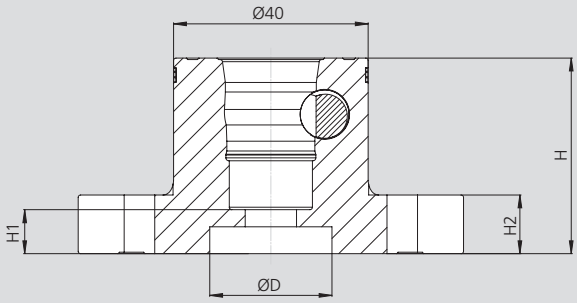

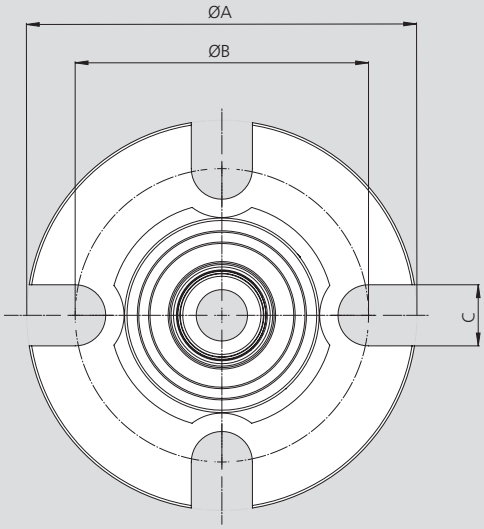

Subject to technical changes.

Technical data

SMW-AUTOBLOK Type		WPS Mini 080-040
Id. No.		460485
A	mm	80
B	mm	60
C	mm	12.5
D / Depth	mm	Ø 25H6 / 5.5
H	mm	40 ± 0.005
H1	mm	9
H2	mm	12
Pull-down force	kN	2.5
Repeatability	mm	< 0.005
Holding force clamping pin M10	kN	16
Holding force clamping pin M8	kN	10

Manual zero point clamping system

- Single quick-actuation for the rapid opening and closing
- Fully sealed

WPS Mini

Workpiece positioning system

Application/customer benefits

- Huge reduction of set-up times for highest efficiency
- Safe workpiece clamping with maximum holding forces and highest repeatability
- Ideal for 5-axis machining
- Central quick actuation (270° rotation)
- Flexible configurations for customized use
- Interchangeable to the zero point system WPS by using flange module

Technical features

- Diameter 40 mm
- Pull-down force 2.5 kN
- Max. torque 10 Nm
- Repeatability < 0.005 mm
- Holding force 16 kN (mounting screw M10 - 12.9)
- **proofline®** = fully sealed - low maintenance

Standart equiment

- WPS Mini with mounting bolt M10

Subject to technical changes.

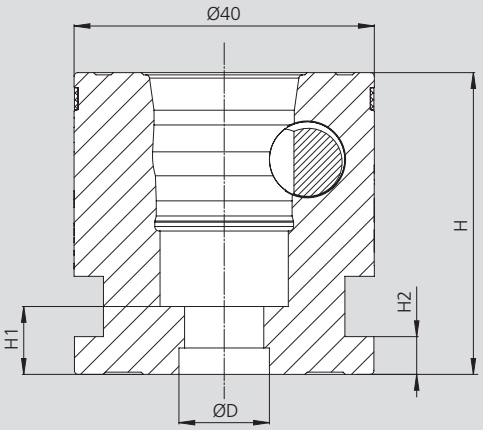

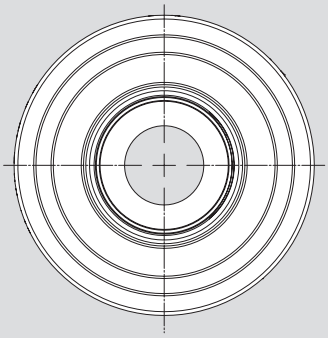

Technical data

SMW-AUTOBLOK Type		WPS Mini 040-040
Id. No		460396
D / Depth	mm	ø 12^{H6} / 5.5
H	mm	40 ± 0.005
H1	mm	9
H2	mm	5
Pull-down force	kN	2.5
Repeatability	mm	< 0.005
Holding force clamping pin M10	kN	16
Holding force clamping pin M8	kN	10

Clamping pin
for WPS Mini

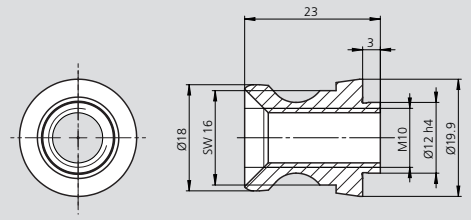

Subject to technical changes.

Clamping pin	Id. No.
Typ A	460399
Typ B	467145
Typ C	467146

Clamping pin
for WPS Max M10 / clamping pin for flange module Mini on WPS Max

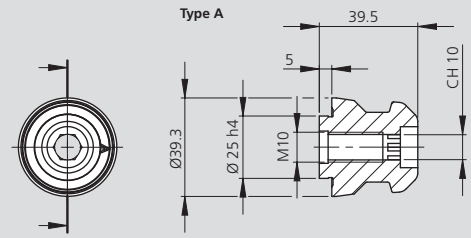

Subject to technical changes.

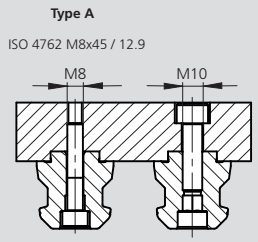

Clamping pin	Id. No.
for WPS max	467008

Reducing adapter
WPS Mini

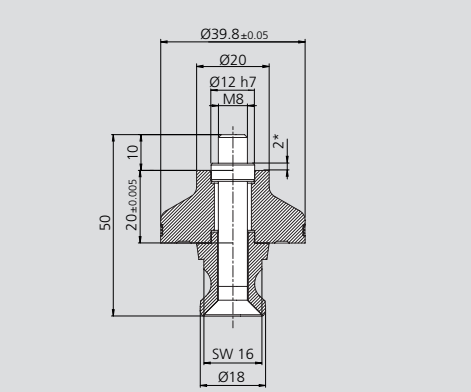

Subject to technical changes.

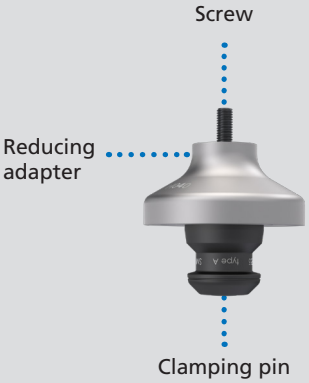

Standard equiment: bolt, reducing adapter and clamping pin

Note: Adaptation ring from Ø 12 (not included).

Reducing adapter [M]	Id. No. Height 20 mm
M8 Typ A	460487

Adaption ring

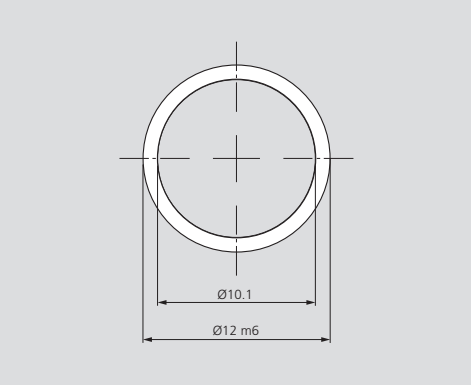

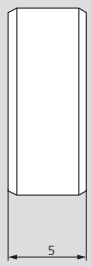

Subject to technical changes.

Adaption ring	Id. No.
For WPS Mini	209223

Application/customer benefits

- Easy and high-precise positioning of the zero point clamping modules
- Special sizes or customer request versions for maximum distances of the machine available in short time
- Alphanumeric labelling for the definition of the positioning of the clamping modules available on request
- Rust protected by means of phosphating

Technical features

- Grid and holes available as standard or on customer request
- High-quality steel (1.2311/1.2312)
- Standard = phosphating / optional = other surface treatment
- Machine specific holes on request

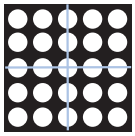

Grid (in center)

Positioning holes Ø25H7,
thread M12/16

Grid	Length	Width
50 / 100	500	500
50 / 100	600	600
50 / 100	800	800
50 / 100	1000	500
50 / 100	1000	800
50 / 100	1200	800
50 / 100	1000	1000

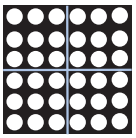

Grid (not in center)

Positioning holes Ø25H7,
thread M12/16

Grid	Length	Width
50 / 100	600	400
50 / 100	500	500
50 / 100	600	500
50 / 100	600	800
50 / 100	1000	500
50 / 100	1000	600
50 / 100	1000	800
50 / 100	1000	1000

Special versions on request

Special grid plate according to customer

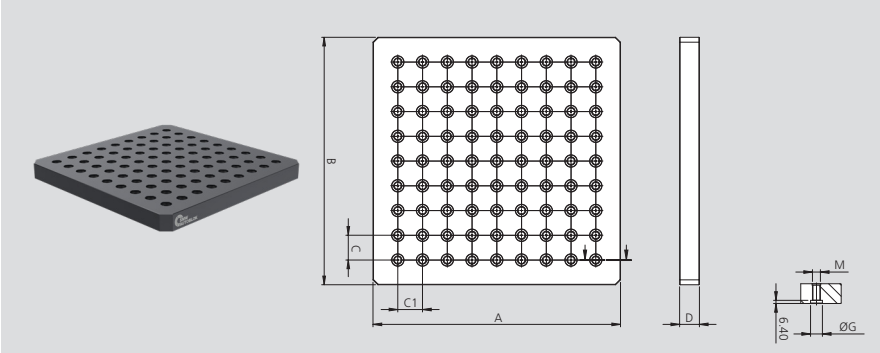

Grid	
A	Length
B	Width
C	Grid dimension 1
C1	Grid dimension 2
D	Thickness
M	Thread
G	Diameter
Grid in center	yes / no

Protective cover with O-ring for grid plates

Protective cover	Id. No.
Ø 18	460163
Ø 20	460255
Ø 22	460256
Ø 24	460257
Ø 25	460164

WPS max

Workpiece positioning system

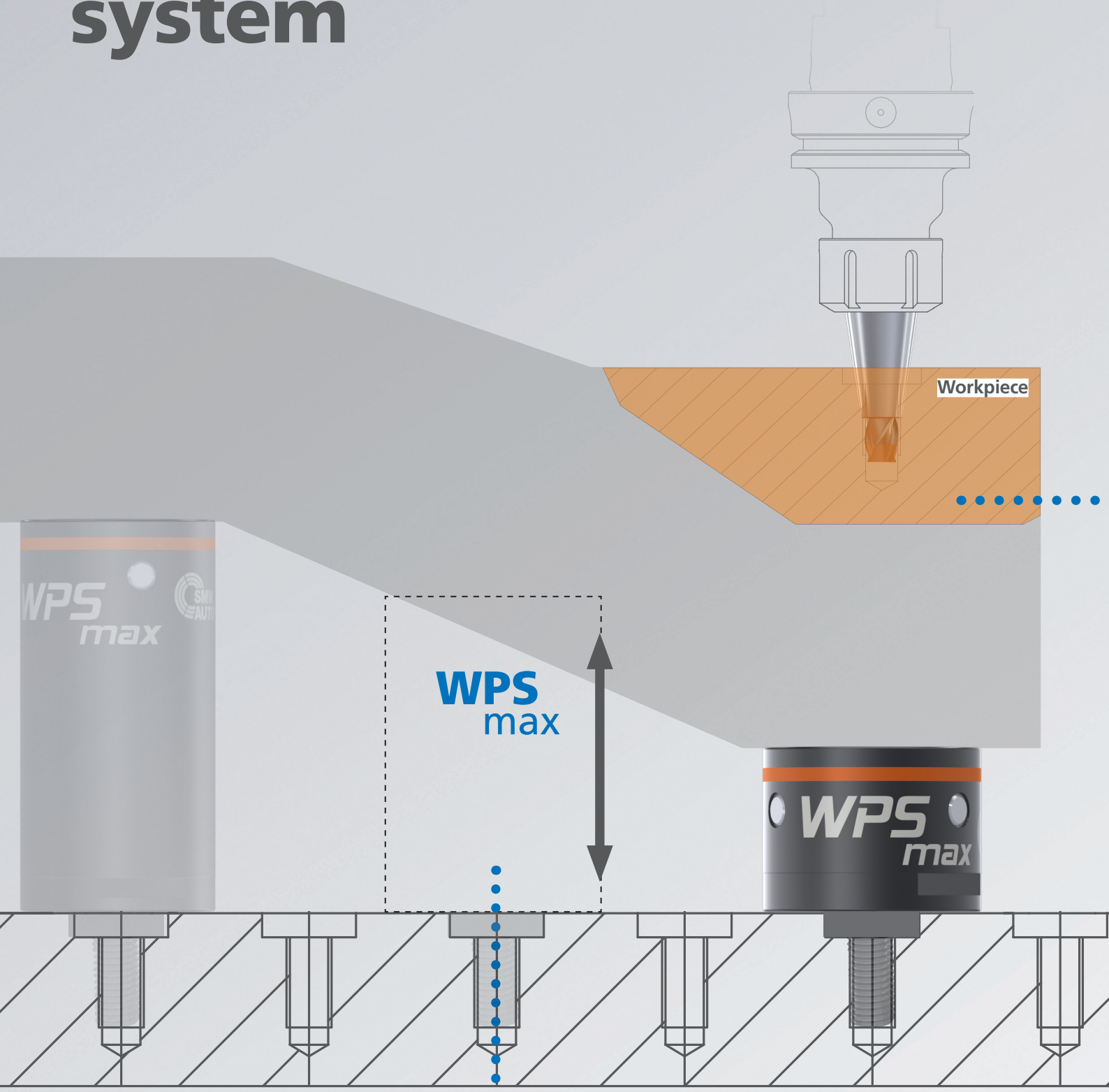

WPS max
available in different sizes:
40, 60, 80, 100, 120, 160 mm

5-axis machining

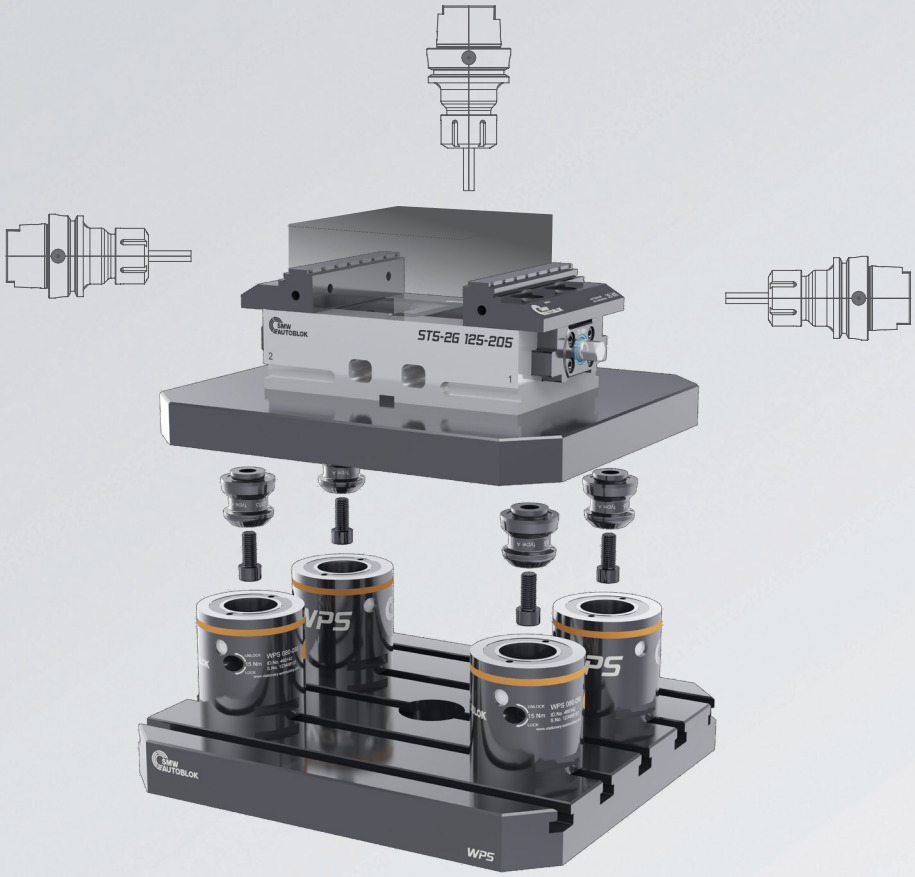

Workpiece-machining

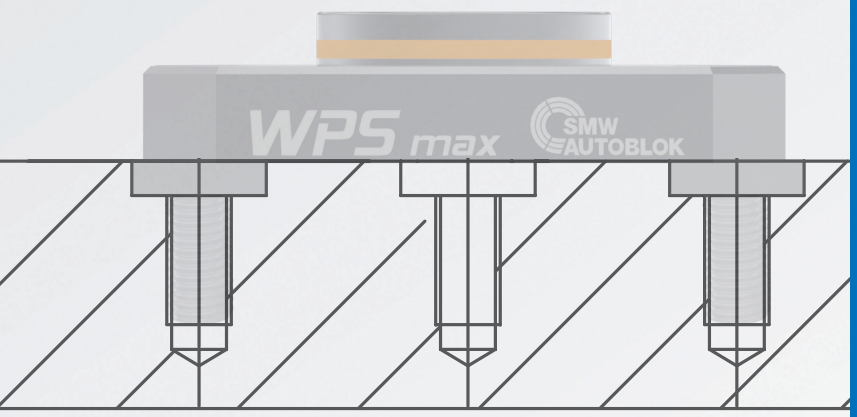

Workholding glossary

Modularity
Modular system with a wide range of accessories ensures the flexible clamping of nearly every workpiece geometry. Furthermore, the clamping pins are interchangeable to the proven zero point clamping system APS.

High-precision positioning
The precise taper / face support ensures the interlocking and safe clamping with highest holding forces and maximum stiffness.

Maintenance-free
Clamping modules are hermetic sealed, therefore low maintenance. The availability of the machine is increased.

Increased in efficiency
Huge reduction of the set-up times and maximum efficiency. No other clamping devices are necessary

5-axis machining
Optimal accessibility, ideal for
5-axis machining without interfering contours.

WPS max

Mounting option

ST5-2G 080-120
(different variants)

CLAMPING PIN
(different variants)

MOUNTING SCREW
(different variants)

CLAMPING MODULE
WPS max Index 040 mm
with anti-rotation protection for precise positioning of the workpiece
(different Module variants)

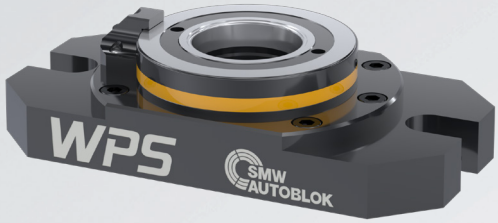

Adaption ring
for positioning on grid plate

Adaption ring
for connection/ centering to the workpiece

REDUCING ADAPTER
(optional)
for connection to the workpiece
(different variants)

MOUNTING SCREW
(different variants)

CLAMPING MODULE WPS max
(different module variants)

Adaption ring
for positioning on grid plate

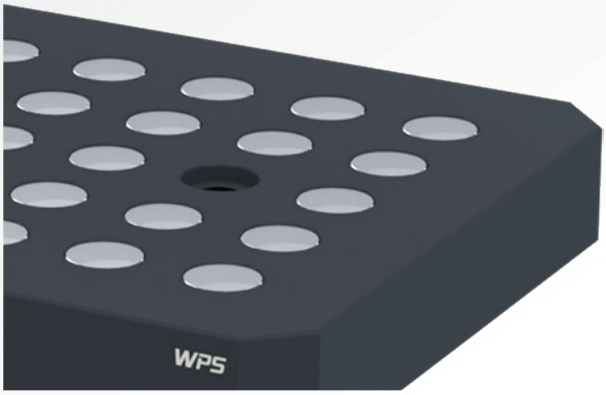

Grid plates
(different variants)

WPS max

Workpiece positioning system

Manual zero point clamping system for workpiece direct clamping

- Single quick-actuation for the rapid opening and closing
- 3 clamping slides

Application/customer benefits

- Huge reduction of set-up times for highest efficiency
- Safe workpiece clamping with maximum pull down and holding forces, highest repeatability
- Ideal for 5-axis machining
- Single quick-actuation for the rapid opening and closing of the modules with only 3.5 rotations
- Flexible configurations for customized use
- Interchangeable to the proven zero point system APS-140

Technical features

- Pull-down force 25 kN
- Max. torque 15 Nm
- Repeatability < 0.005 mm
- Holding force 50 / 75 kN (M12 / M16) depending on thread of clamping pin
- 3 clamping slides for maximum hold while clamping
- Solid drive system with hardened components
- **proofline®** = fully sealed - low maintenance

Standard equipment

- WPS max with mounting bolt M16 (except 080-040)

WPS max 080-040

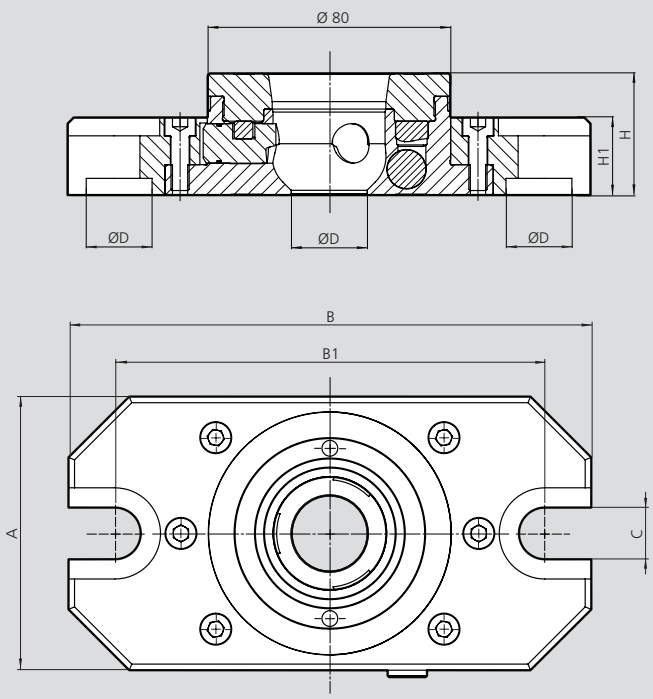

WPS max 080-060, 080-080, 080-100, 080-120, 080-160

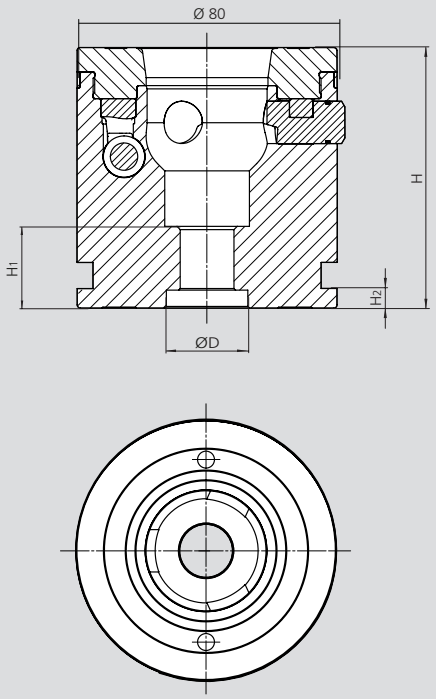

Subject to technical changes.

Technical data

SMW-AUTOBLOK Type	080-040	080-060	080-080	080-100	080-120	080-160
WPS max / Id. No.	467450	467452	467454	467456	467458	467460
A	90	-	-	-	-	-
B	172	-	-	-	-	-
B1	141.4	-	-	-	-	-
C	17	-	-	-	-	-
D / Depth	Ø 25H6	Ø 25H6 / 5.5	Ø 25H6 / 5.5	Ø 25H6 / 5.5	Ø 25H6 / 5.5	Ø 25H6 / 5.5
H	40 ± 0.005	60 ± 0.005	80 ± 0.005	100 ± 0.005	120 ± 0.005	160 ± 0.005
H1	25.5	21	25	45	65	105
H2	-	6	6	6	6	6
Pull-down force (kN)	25	25	25	25	25	25
Repeatability (mm)	< 0.005	< 0.005	< 0.005	< 0.005	< 0.005	< 0.005
Holding force M12 (kN)	25* / 50*	25* / 50*	25* / 50*	25* / 50*	25* / 50*	25* / 50*
Holding force M16 (kN)	40** / 75**	40** / 75**	40** / 75**	40** / 75**	40** / 75**	40** / 75**

* Holding force for ISO 4762 M10x45 - 12.9 / Holding force for ISO 4762 M12 - 12.9 (see clamping pins)
** Holding force for ISO 10642 M12x55 - 10.9 / Holding force for ISO 4762 M16 - 12.9 (see clamping pins)

Manual zero point clamping system for workpiece direct clamping

- Single quick-actuation for the rapid opening and closing
- 3 clamping slides

WPS max Index

Workpiece positioning system

Application/customer benefits

- Huge reduction of set-up times for highest efficiency
- Safe workpiece clamping with maximum pull down and holding forces, highest repeatability
- Ideal for 5-axis machining
- Single quick-actuation for the rapid opening and closing of the modules with only 3.5 rotations
- Flexible configurations for customized use
- Interchangeable to the proven zero point system APS-140
- Anti rotating protection

Technical features

- Pull-down force 25 kN
- Max. torque 15 Nm
- Repeatability < 0.005 mm
- Holding force 50 / 75 kN (M12 / M16) depending on thread of clamping pin
- 3 clamping slides for maximum hold while clamping
- Solid drive system with hardened components
- **proofline®** = fully sealed - low maintenance

Standard equipment

- WPS max with mounting bolt M16 (except 080-040)

WPS 080-040 Index

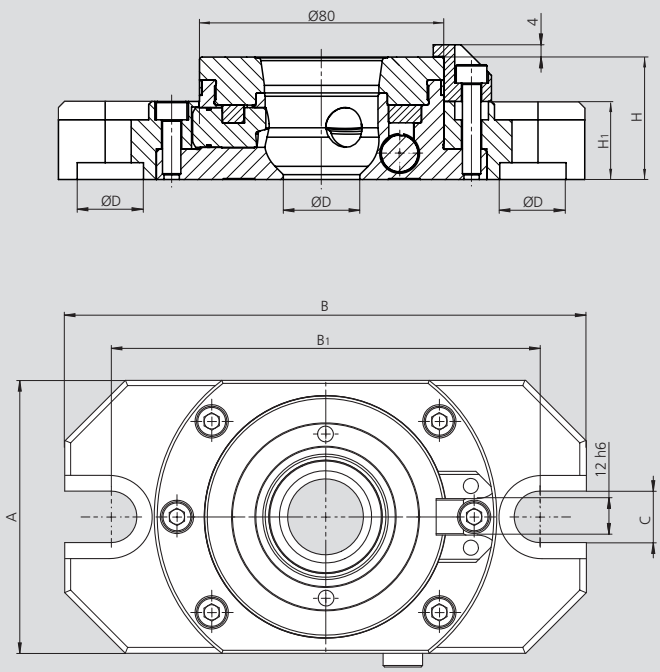

WPS max 080-060, 080-080, 080-100, 080-120, 080-160 Index

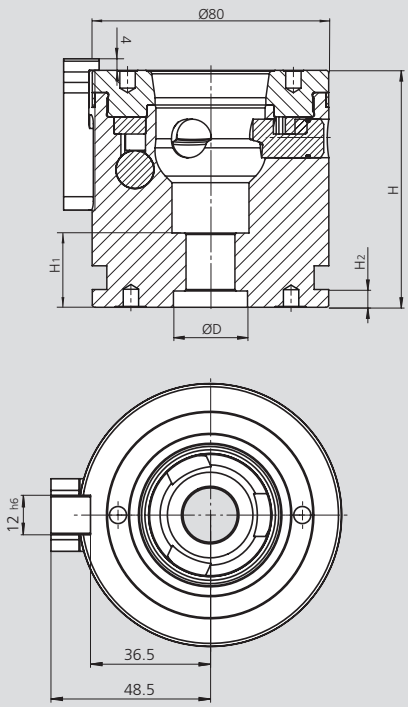

Subject to technical changes.

Technical data

SMW-AUTOBLOK Type	080-040	080-060	080-080	080-160
WPS max Index / Id.No.	467660	467662	467664	467670
A	90	-	-	-
B	172	-	-	-
B1	141.4	-	-	-
C	17	-	-	-
D / Depth	Ø 25H6	Ø 25H6 / 5.5	Ø 25H6 / 5.5	Ø 25H6 / 5.5
H	40 ± 0.005	60 ± 0.005	80 ± 0.005	160 ± 0.005
H1	19.5	21	25	105
H2	-	6	6	6
Pull-down force (kN)	25	25	25	25
Repeatability (mm)	< 0.005	< 0.005	< 0.005	< 0.005
Holding force M12 (kN)	25* / 50*	25* / 50*	25* / 50*	25* / 50*
Holding force M16 (kN)	40** / 75**	40** / 75**	40** / 75**	40** / 75**

* Holding force for ISO 4762 M10x45 - 12.9 / Holding force for ISO 4762 M12 - 12.9 (see clamping pins)
** Holding force for ISO 10642 M12x55 - 10.9 / Holding force for ISO 4762 M16 - 12.9 (see clamping pins)

WPS Z-Flex

Workpiece positioning system

Height adjustable, manual zero point clamping system for workpiece direct clamping

- Single quick-actuation for the rapid opening and closing
- Fully sealed

Application/customer benefits

- Huge reduction of set-up times for highest efficiency
- Continuous height adjustment
- Ideal for 5-axis machining
- Single quick-actuation for the rapid opening and closing of the modules with only 3.5 rotations
- Flexible configurations for customized use
- Interchangeable to the proven zero point system APS

Technical features

- Diameter 80 mm
- Stroke 12 mm
- Pull-down force / max. torque 15 kN / 15 Nm
- Max. axial load 800 kg
- 3 clamping slides for maximum hold while clamping
- **proofline®** = fully sealed - low maintenance

Standard equipment

- WPS Z-Flex with mounting bolt M16

Subject to technical changes.

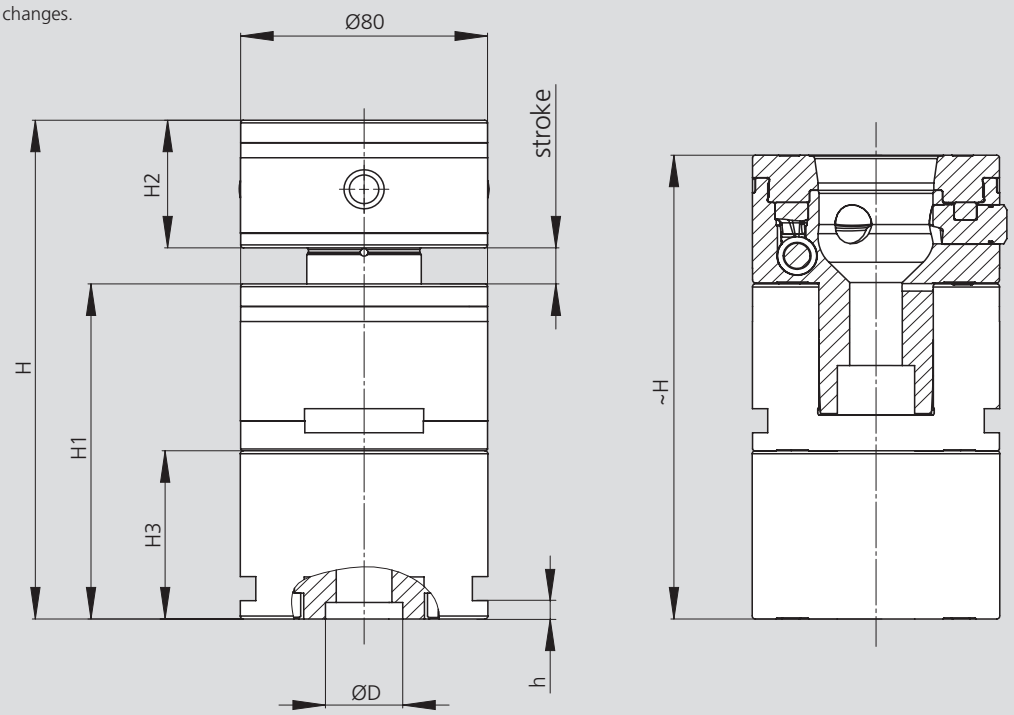

Technical data

SMW-AUTOBLOK Type		WPS Z-Flex 98-110	WPS Z-Flex 114 - 126	WPS Z-Flex 154 - 166
Id. No.		467525	467528	467530
D / Depth	mm	Ø 25^{H6} / 5,5	Ø 25^{H6} / 5,5	Ø 25^{H6} / 5,5
H	mm	98 - 110	114 - 126	154 - 166
H1	mm	55.5	71.5	111.5
H2	mm		42.5	
H3	mm	-	16	56
h	mm		6	
Stroke	mm		12	
Pull-down force	kN		15	
M			16	

Notes

Clamping pins

Type and positioning of the clamping pins (standard)

Type A
Centering bolt

- Used for centering and clamping

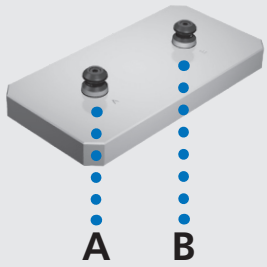

Type B
Sword bolt

- Used for reference and clamping

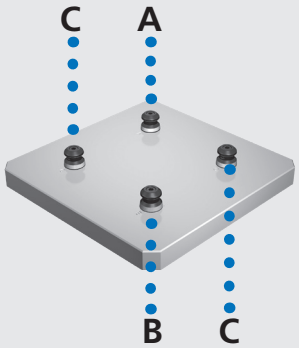

Type C
Clamping bolt/ floating (0.1 mm)

- Used only for clamping

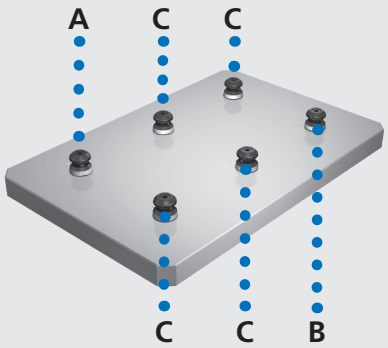

Positioning of the clamping pins

Type B
Sword pin for positioning in one axis

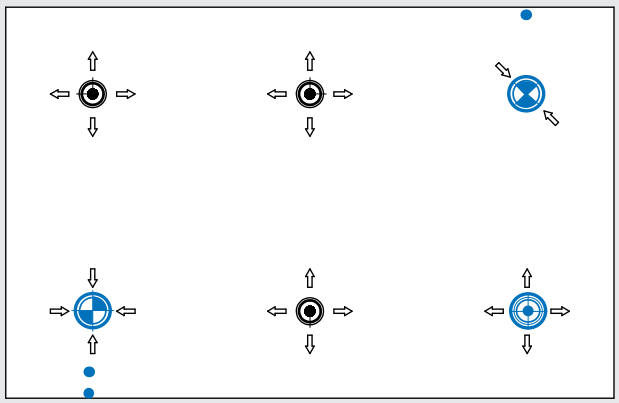

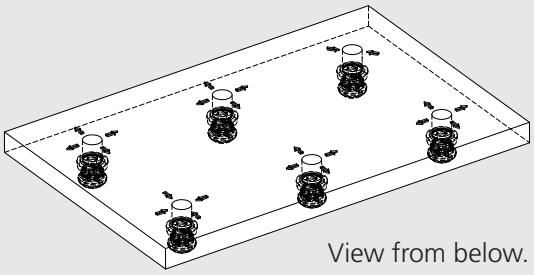

View from below.

Type C floating
Clamping pin with 0.1 mm radial clearance / centering clearance

Type A
Clamping pin with centering function

Interface in workpiece for clamping pin

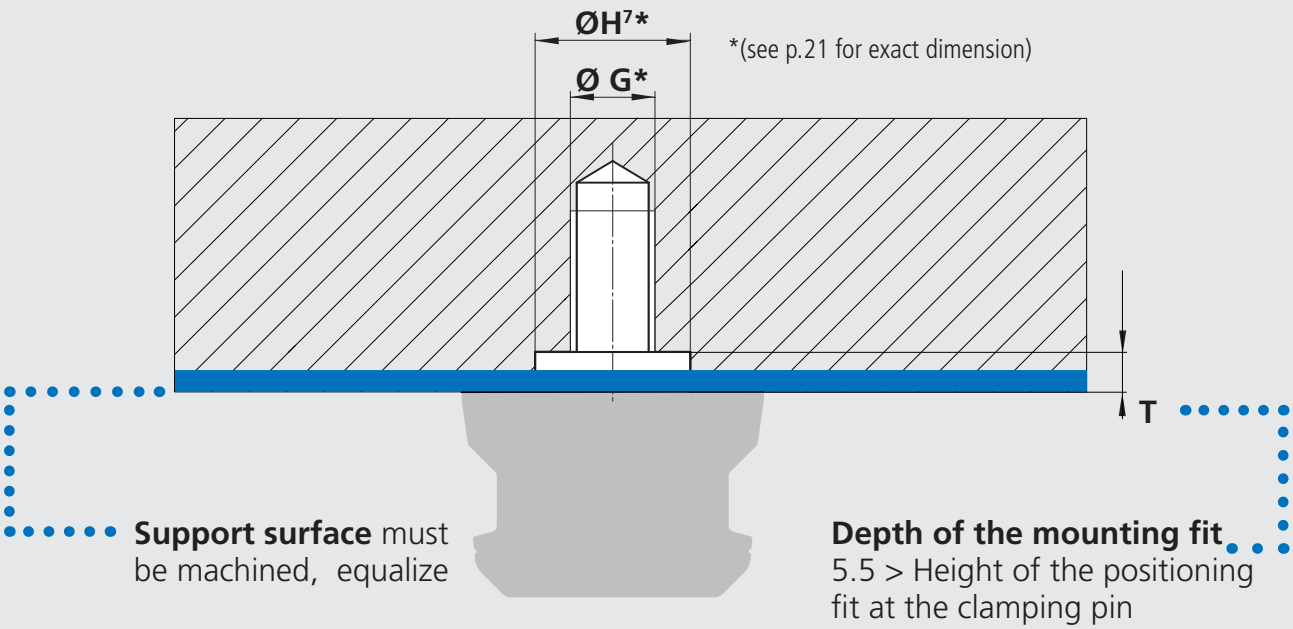

Pendulum pin

Pendulum pin

- Used to compensate hardness distortion of the workpiece.

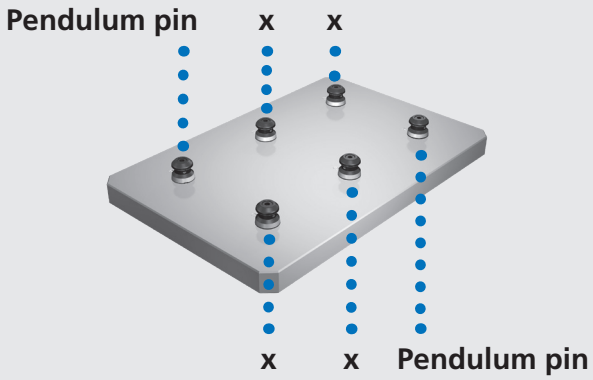

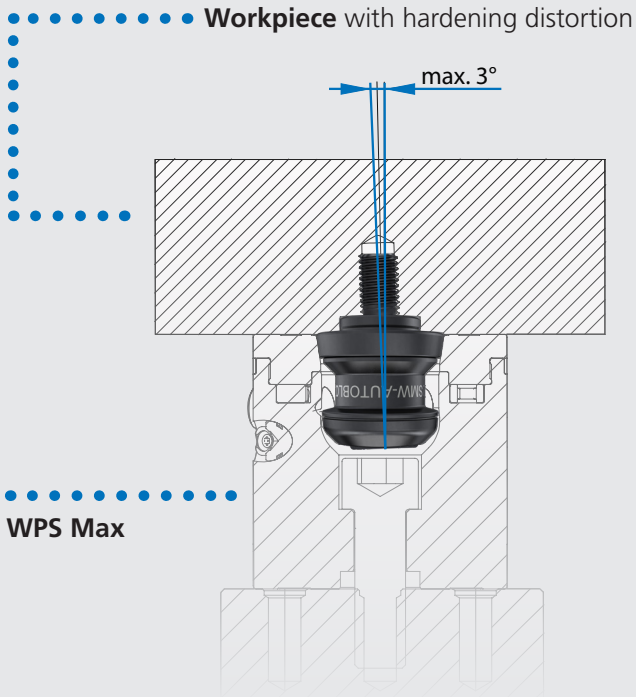

WPS max

Clamping pin

■ Clamping pin (standard)

Type A Type B Type C

Application/customer benefits

- To be mounted to the workpiece
- Fixation and positioning on the clamping system WPS
- Wear-resistant due to an extra hard protective coating
- Large entry radius of the clamping pins for easy and safe loading

Technical features

- Centering pin Type A (Standard)
- Sword pin Type B (Positioning pin)
- Clamping pin Type C (with centering play 0.1 mm)

Standard equipment

Clamping pin with mounting screw

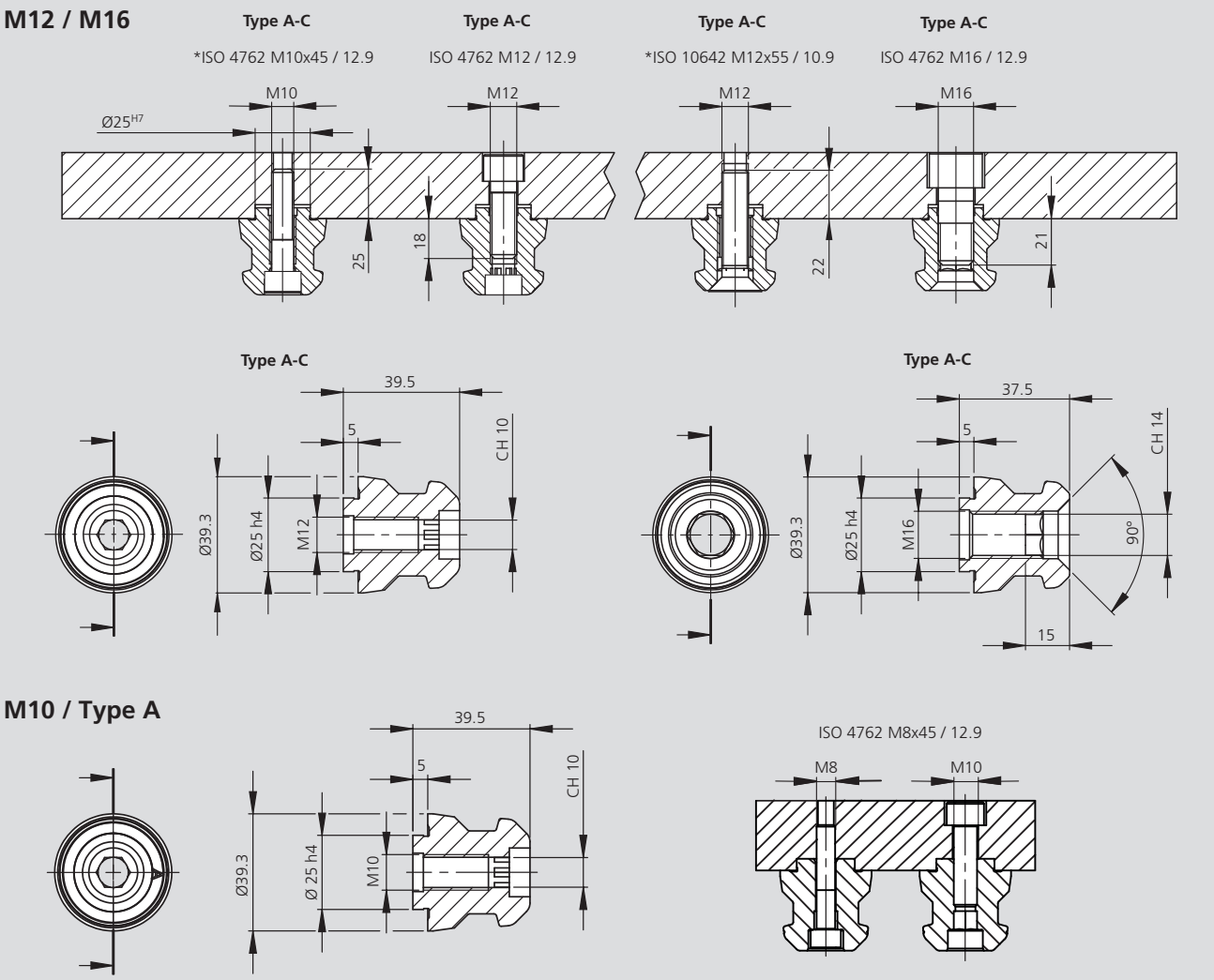

Subject to technical changes.

* included in delivery.

Order review

Type	Thread clamping pin / mounting screw class	Type A Id. No.	Type B Id. No.	Type C Id. No.	Weight [kg]
Clamping pin WPS	M10 / 12.9	467008	467308	467309	0.3
Clamping pin WPS	M12 / 12.9	46162355	46162356	46162357	0.3
Clamping pin WPS	M16 / 12.9	46162455	46162456	46162457	0.3

Clamping pin

WPS max

- Clamping pin without collar
- Pendulum pin

Clamping pin without collar

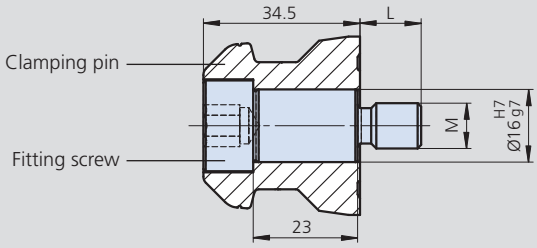

Clamping pin with fitting screw without centering collar

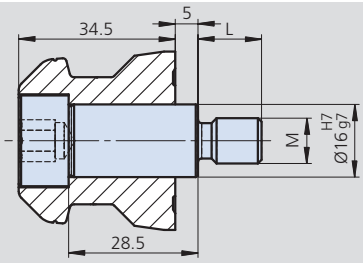

Clamping pin with fitting screw with centering collar

Clamping pin without centering	M	L	Id. No.
Clamping pin without centering Type A	-	-	460176
Clamping pin without centering Type C	-	-	460208

Fitting Screw	M	L	Id. No.
Fitting screw Ø16	M10	14	460093
Fitting screw Ø16	M12	17	460091
Fitting screw Ø16	M16	20	460096
Fitting screw Ø16 with centering	M10	14	460258
Fitting screw Ø16 with centering	M12	17	460259
Fitting screw Ø16 with centering	M16	20	460260

Pendulum pin

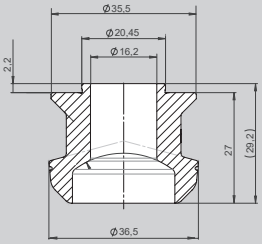

Subject to technical changes.

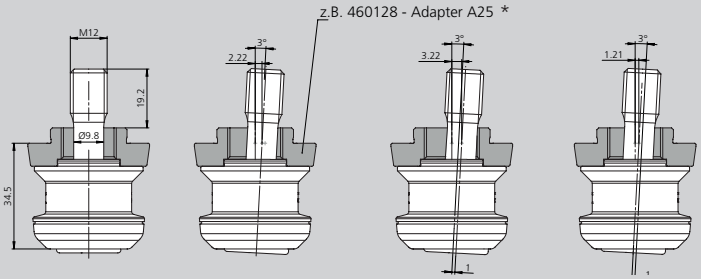

* not included!

Pendulum pin	Thread	Weight [kg]	Id.-No.
Pendulum pin type C	M12	0,25	460421
Pendulum pin type C	M16	0,25	460449

Note:
Max. holding force - 35 kN!

WPS max

Clamping pin

- Clamping pin base 2-part + adapter
- Dimension interface for clamping pin in workpiece

Clamping pin WPS max for workpieces with interface dimensions Ø 18-25 mm

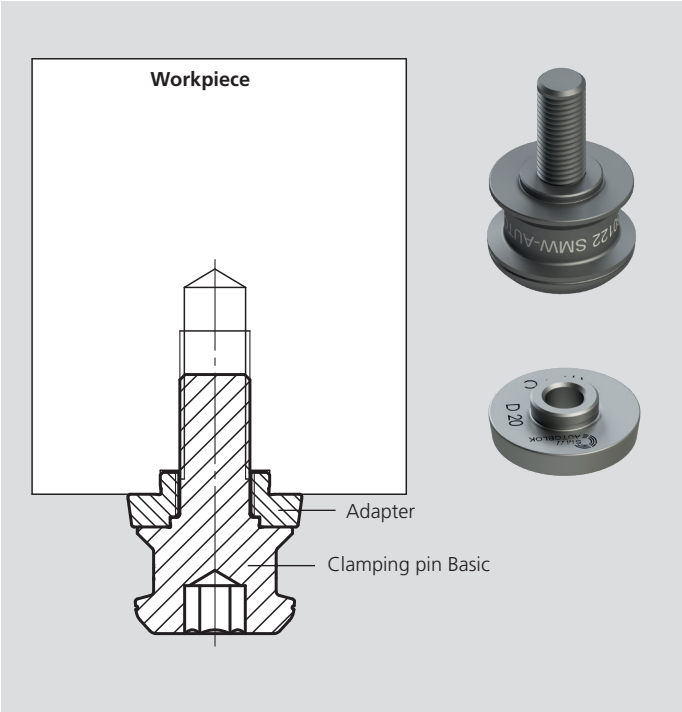

Clamping pins Basic WPS 2-pieces

Clamping pins	Id. No.
Clamping pins Basic M12 (without adapter)	460122
Clamping pins Basic M16 (without adapter)	460123
Clamping pins Basic 7/16" (without adapter)	460108
Clamping pins Basic 5/8" (without adapter)	460109

Adapter

Ø	Type	Id. No.	Type	Id. No.	Type	Id. No.
18*	A	460124	B	460341	C	460129
20	A	460125	B	460342	C	460130
22	A	460126	B	460343	C	460131
24	A	460127	B	460344	C	460132
25	A	460128	B	460345	C	460133

Centering pin Type A (Standard)
Sword pin Type B (Positioning pin)
Clamping pin Type C (with centering play 0.1 mm)

* Use only together with Clamping pins M12/ 7/16"

Interface dimensions for clamping pins in the workpiece

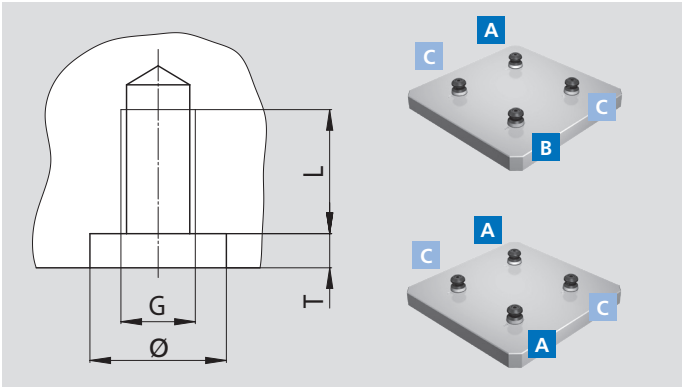

SMW-AUTOBLOK Type	Ø H7	G	L	T+0.2
Clamping pin Basic M12				
Adapter Ø18	18	M12	20	5.5
Adapter Ø20	20	M12	20	5.5
Adapter Ø22	22	M12	20	5.5
Adapter Ø24	24	M12	20	5.5
Adapter Ø25	25	M12	20	5.5
Clamping pin Basic M16				
Adapter Ø20	20	M16	25	5.5
Adapter Ø22	22	M16	25	5.5
Adapter Ø24	24	M16	25	5.5
Adapter Ø25	25	M16	25	5.5

Adaption ring Ø 25 for positioning

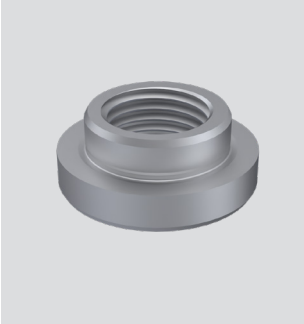

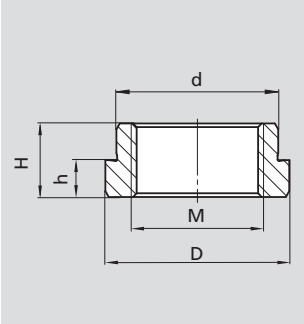

Adaptation ring Ø		Dimensions			Id. No.
D	d	M	H	h	
Ø 25	Ø 16	M12x1.5	10	5	460177
Ø 25	Ø 18	M14x1.5	10	5	460135
Ø 25	Ø 20	M18x1.5	10	5	460136
Ø 25	Ø 22	M18x1.5	10	5	460137
Ø 25	Ø 24	M18x1.5	10	5	460138
Ø 25	Ø 25	M18x1.5	10	0,8	460139

Mounting screws and reducing washer

for WPS max installation to use M10 and M12 fixing screws

Reduction
for countersunk screw

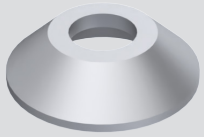

Only for WPS max 60 mm height!

Reduction
for cylinder screw

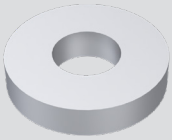

Mounting screw/ reduction for M10 and M12		Screw	Reduction	Screw	Reduction
WPS Max (H)	Screw (L)	M10	M10	M12	M12
60 mm	40 mm	207780	460206	207779	460207
80 mm	50 mm	010814	460204	010212	460205
100 mm	70 mm	010816	460204	010444	460205
120 mm	90 mm	010815	460204	014026	460205
160 mm	130 mm	019363	460204	010599	460205

Reducing adapter

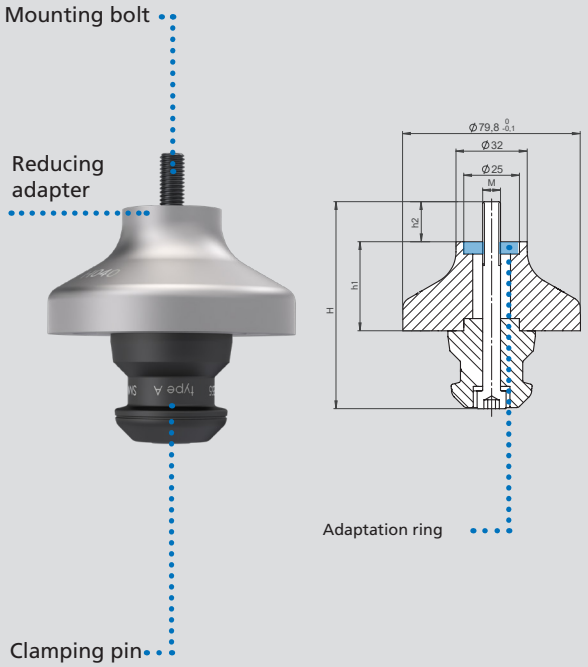

Subject to technical changes.

Reducing adapter						
Type		M	H (mm)	h1 (mm)	h2 (mm)	Id. No.
M08-040-B25	A	M8	93	40	18	460216
M08-040-B25	B					467726
M08-040-B25	C					467727
M08-080-B25	A	M8	133	80	18	460219
M08-080-B25	B					467728
M08-080-B25	C					467729
M10-040-B25	A	M10	95	40	20	460217
M10-040-B25	B					467722
M10-040-B25	C					467723
M10-080-B25	A	M10	135	80	20	460220
M10-080-B25	B					467724
M10-080-B25	C					467725
M12-040-B25	A	M12	100	40	27	460218
M12-040-B25	B					467718
M12-040-B25	C					467719
M12-080-B25	A	M12	140	80	27	460221
M12-080-B25	B					467720
M12-080-B25	C					467721
M16-040-B25	A	M16	100	40	28	460365
M16-040-B25	B					467700
M16-040-B25	C					467702
M16-080-B25	A	M16	140	80	28	460366
M16-080-B25	B					467716
M16-080-B25	C					467717

Note: Adaptation rings Ø 25g6 not included in delivery.

Spacers for WPS modules

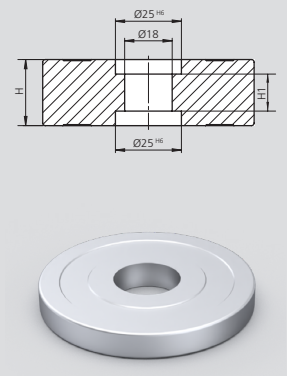

Subject to technical changes.

Application example

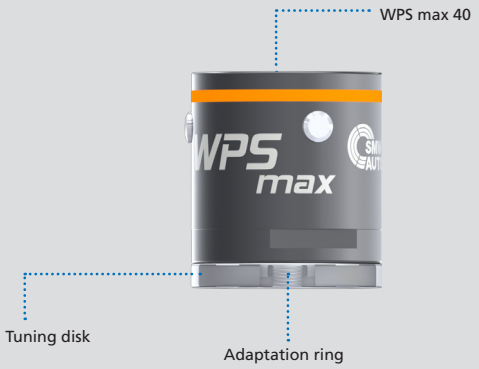

Attention: Standard mounting screw can not be used anymore. Please check for correct thread engagement.

Spacer		
Id. No.	**H**	**H1**
460224	10	-
460225	15	4
460226	20	9
460227	25	14
460236	45	34

Slide hammer (puller) for adapters and clamping pins

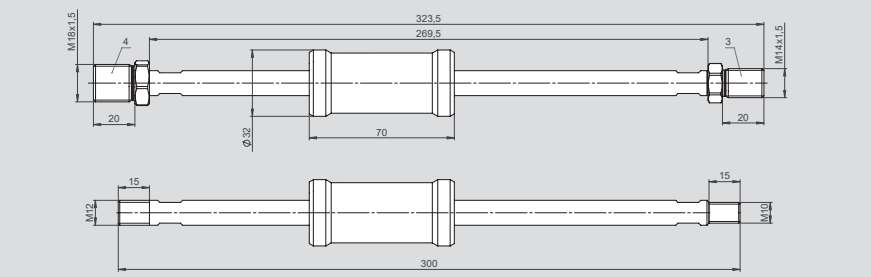

Subject to technical changes.

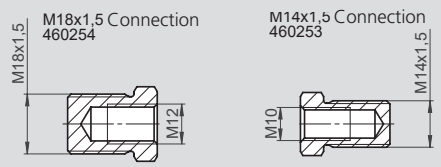

Standard equipment: Extractor and Connection (M14x1,5 und M18x1,5)

Slide hammer with thread M10 and M12	Id. No
for adapter and clamping pins	460250

Connection	Id. No
M14 x1.5 for M10	460253
M18 x1.5 for M12	460254
M24 x1.5 for M12	467689
M28 x1.5 for M12	467690

Positioning set for WPS max 080

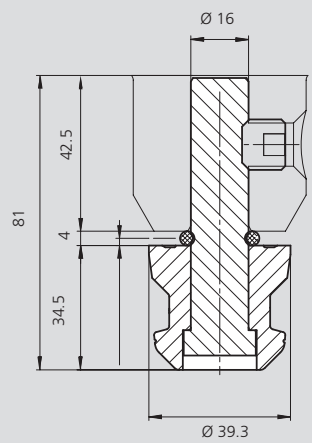

Subject to technical changes.

Standard equiment: pin, O-ring and clamping pin

Note:
Compatible with all common tool holders. Positioning of the module ± 0.03 (depending on tool holder). The WPS modules may be actuated with max. 2 Nm (instead of 15 Nm) in conjunction with the positioning set, otherwise there is a risk of damage!

Positioning set for WPS max 080
Id. No.
460248

Mounting set from 2 modules

Application example with 2 modules

Standard equipment: screw and clamping pin

Mounting set		
WPS max	**Screw length**	**Id.No.**
WPS max 080-060	M16 x 35	460261
WPS max 080-080	M16 x 40	460262
WPS max 080-100	M16 x 60	467427
WPS max 080-120	M16 x 120	467458
WPS max 080-160	M16 x 160	467460

Adapter set
WPS max

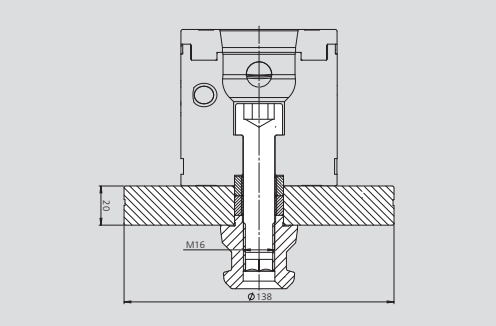

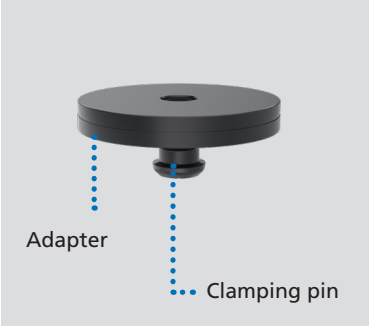

Application example
WPS Module with ZeroAct and APS

Standard equipment: screw, adapter and clamping pin

Adapter set for WPS max
Id. No.
460359

Workpiece stabilizer W-210

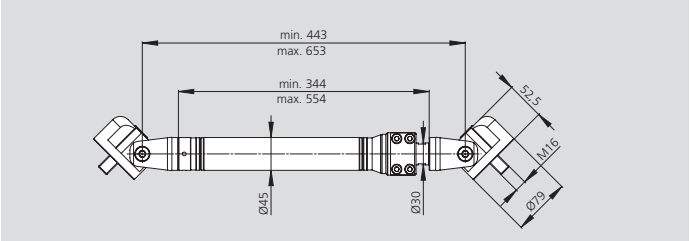

Extension WSE-208	Id. No.
	460248

Extension WSE-208 for workpiece stabilizer W-210x

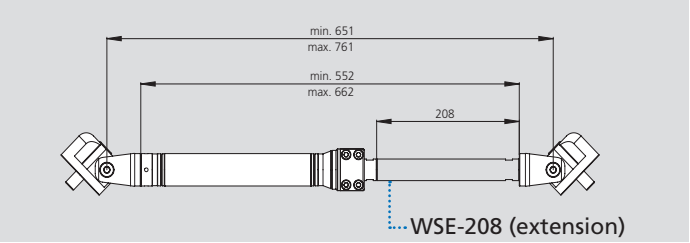

Extension WSE-208	Id. No.
	460354

Note:
- Without workpiece stabilizer
- Max. 2-fold extendable

Fine adjustment WSF-10 for workpiece stabilizer W-210

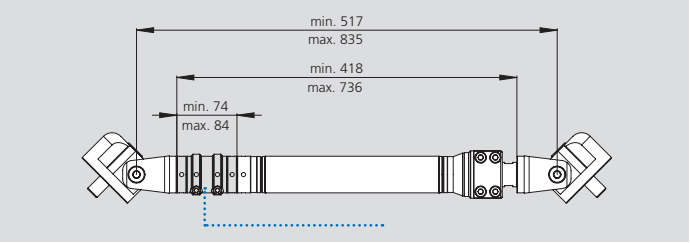

Extension WSF-10	Id. No.
	460336

Note:
- Without workpiece stabilizer

Application examples

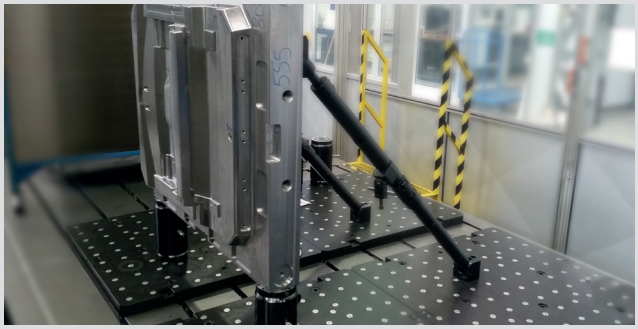

Module flange

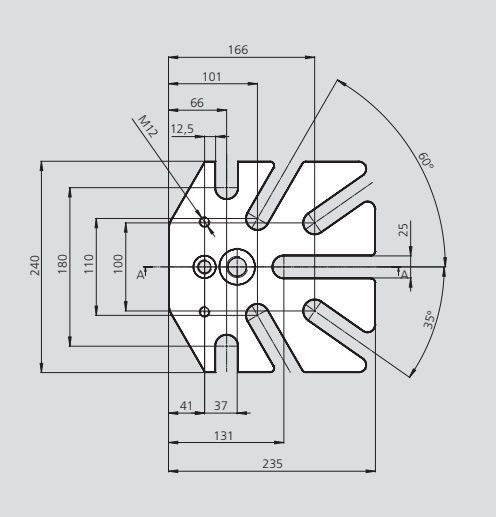

Subject to technical changes.

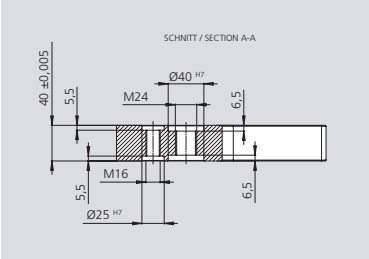

Application example with WPS max

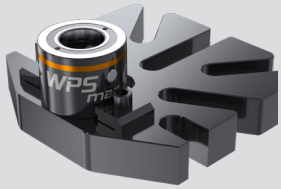

Type	Id. No.
Module flange	467316

Clamping claw	T-slot	Id. No.
NST14-M12	14	467289
NST16-M12	16	467340
NST18-M12	18	467341
NST20-M12	20	467342

ER collet chuck

ER collet chuck	Id. No
ER 32	462519

Workpiece stop for ER collet chuck

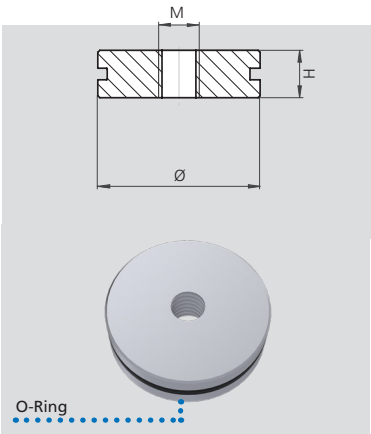

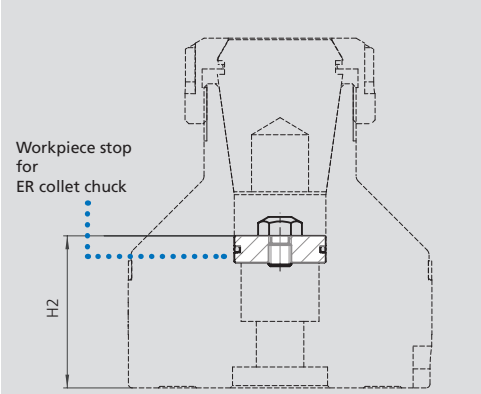

Subject to technical changes.

Standard equiment: Workpiece stop and O-ring

Depth stop	Id. No.	M	H	H2	Ø
ER 32	4462529	M8	7	44	38,5

WPS

Workpiece positioning system

Grid plates

- Grid plates, (special)
- Protective cover

Application/customer benefits

- Easy and high-precise positioning of the zero point clamping modules
- Special sizes or customer request versions for maximum distances of the machine available in short time
- Alphanumeric labelling for the definition of the positioning of the clamping modules available on request
- Rust protected by means of phosphating

Technical features

- Grid and holes available as standard or on customer request
- High-quality steel (1.2311/1.2312)
- Standard = phosphating / optional = other surface treatment
- Machine specific holes on request

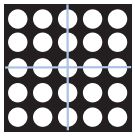

Grid (in center)

Positioning holes Ø25H7,
thread M12/16

Grid	Length	Width
50 / 100	500	500
50 / 100	600	600
50 / 100	800	800
50 / 100	1000	500
50 / 100	1000	800
50 / 100	1200	800
50 / 100	1000	1000

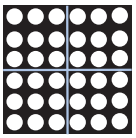

Grid (not in center)

Positioning holes Ø25H7,
thread M12/16

Grid	Length	Width
50 / 100	600	400
50 / 100	500	500
50 / 100	600	500
50 / 100	600	800
50 / 100	1000	500
50 / 100	1000	600
50 / 100	1000	800
50 / 100	1000	1000

Special versions on request

Special grid plate according to customer

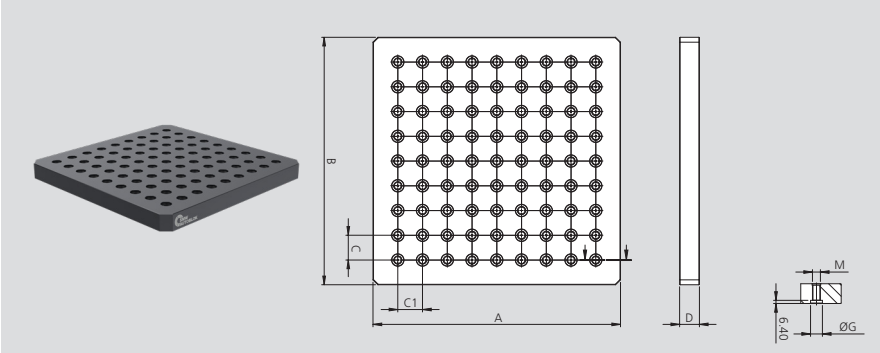

Grid	
A	Length
B	Width
C	Grid dimension 1
C1	Grid dimension 2
D	Thickness
M	Thread
G	Diameter
Grid in center	yes / no

Protective cover with O-ring for grid plates

Protective cover	Id. No.
Ø 18	460163
Ø 20	460255
Ø 22	460256
Ø 24	460257
Ø 25	460164

Notes

WPS XL

Workpiece positioning system

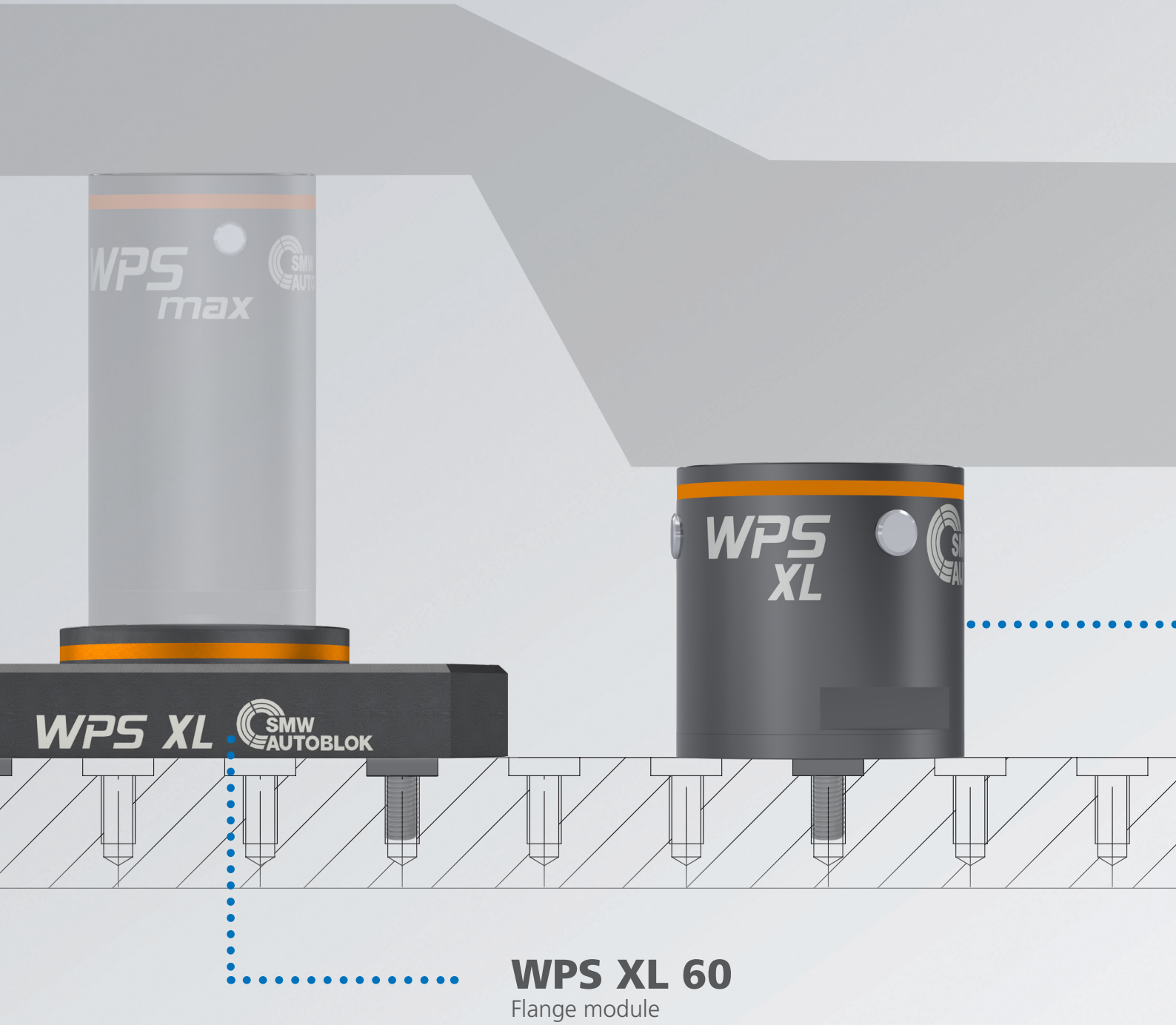

WPS XL 60
Flange module

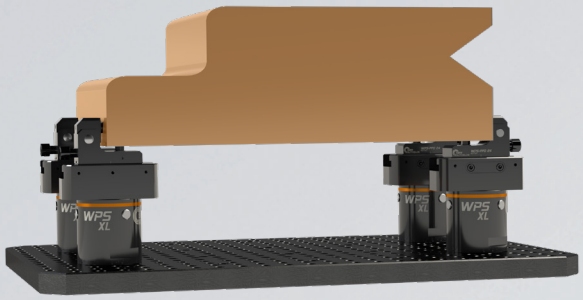

1. application example
Workpiece machining with WPS XL + WPS-PPD 24

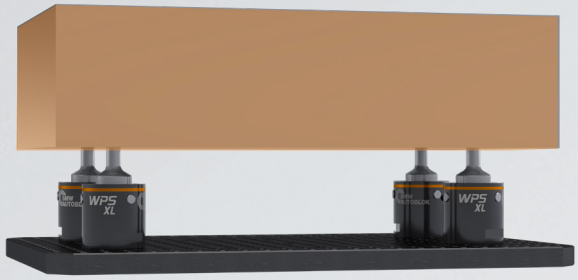

2. application example
Workpiece machining with WPS XL + reducing adapter

3. application example
Workpiece machining with WPS XL

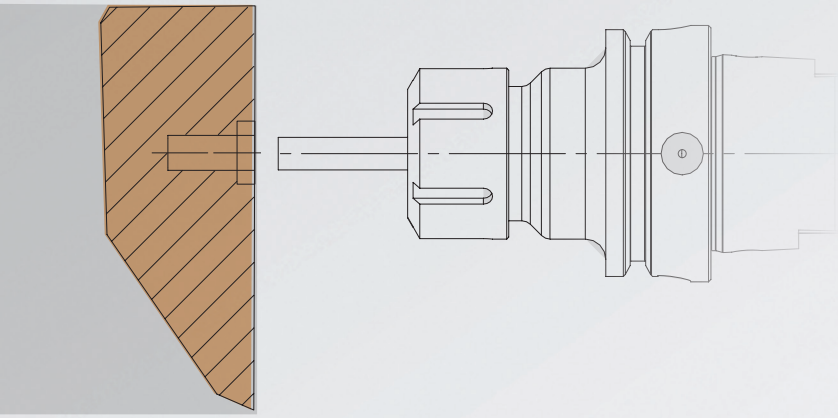

WPS XL

available in different sizes:
100, 140, 200 mm

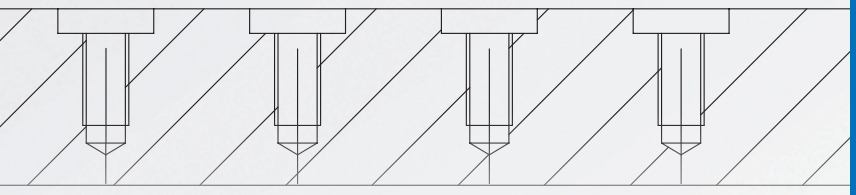

Workholding glossary

Modularity
Modular system with a wide range of accessories ensures the flexible clamping of nearly every workpiece geometry. Furthermore, the clamping pins are interchangeable to the proven zero point clamping system APS.

High-precision positioning
The precise taper / face support ensures the interlocking and safe clamping with highest holding forces and maximum rigidity.

Maintenance-free
Clamping modules are hermetic sealed, therefore low maintenance. The availability of the machine is increased.

Increased in efficiency
Huge reduction of the set-up times and maximum efficiency. No other clamping devices are necessary.

5-axis machining
Optimal accessibility, ideal for
5-axis machining without interfering contours.

WPS XL

Order overview

Clamping bolt
(different variants,
see page clamping bolt)

Mounting screw

WPS XL
(Module variants,
see page clamping module)

Adaptation ring

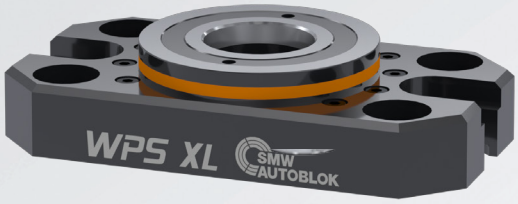

WPS XL Flange module
(Module variants,
see page WPS XL clamping mo-
dule)

Grid plate
(different variants,
see page grid plates)

WPS Max
(Module variants,
see page clamping module)

Clamping bolt
(different variants,
see page clamping bolt)

CLAMPING MODULE WPS XL
(Module variants,
see page WPS XL clamping module)

Adaptation ring (optional)
for positioning on grid plate
(different variants,
see page accessories)

WPS XL

Workpiece positioning system

Manual zero point clamping system for workpiece direct clamping

- Single quick-actuation for the rapid opening and closing
- 3 clamping slides

Application/customer benefits

- Huge reduction of set-up times for highest efficiency
- Safe workpiece clamping with maximum holding forces and highest repeatability
- Ideal for 5-axis machining
- Single quick-actuation for the rapid opening and closing of the modules with only 3 rotations
- Flexible configurations for customized use

Technical features

- Pull-down force 40 kN
- Holding force 100 kN*
- Max. torque 30 Nm
- Repeatability < 0.01 mm
- Solid drive system with hardened components
- 3 clamping slides for maximum hold while clamping
- **proofline®** = fully sealed - low maintenance

Standardequiment

WPS XL with mounting screw M24 (except WPS XL 60)

WPS XL 60

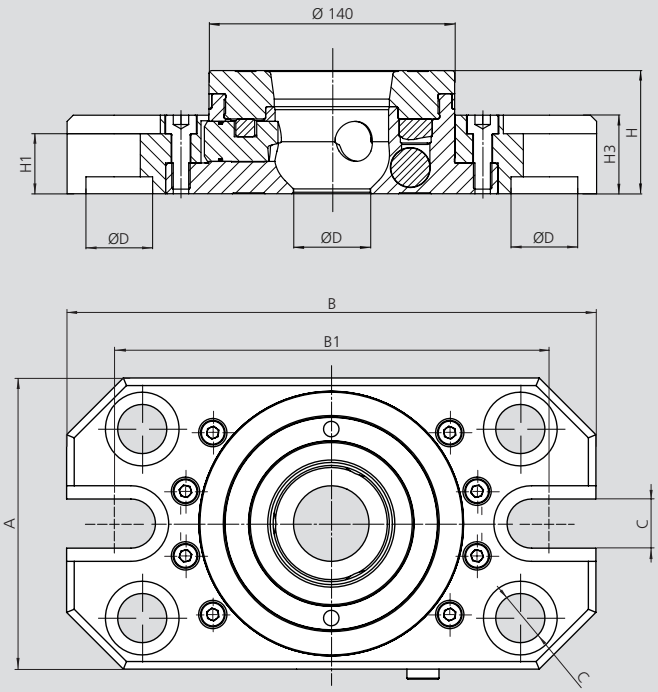

WPS XL 140, 200

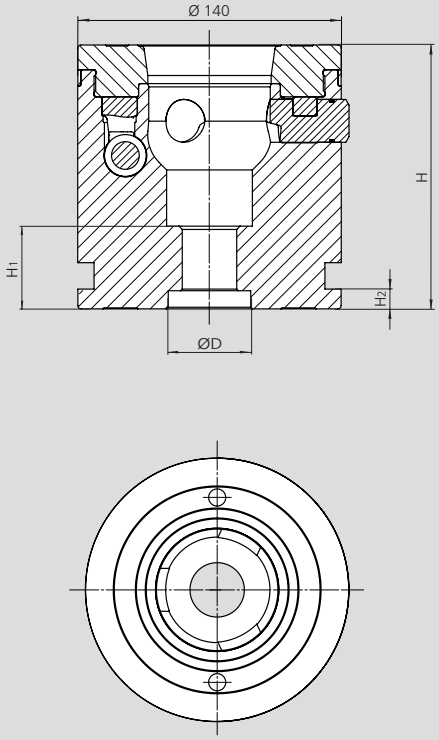

Subject to technical changes.

Technical data

SMW-AUTOBLOK Type	WPS XL-60 467600	WPS XL-100 467602	WPS XL-140 467604	WPS XL-200 467606
A	154	-	-	-
B	280	-	-	-
B1	212	-	-	-
C	26	-	-	-
D / Depth	Ø 40 H6 / 6,5			
H	60	100	140	200
H1	42	19	19	34
H2	-	14	14	14
H3	27,5	-	-	-
Pull-down force (kN)	40			
Repeatability (mm)	< 0.01			
Holding force (kN) Clamping bolt M12 / M16	50* / 75*			
Holding force (kN) Clamping bolt M20 / M24	100 **			

* Holding force for ISO 4762 M12x60 - 12.9 / Holding force for ISO 4762 M16 - 12.9 (see clamping pins)
** Holding force for ISO 4762 M20x70 - 12.9 - Holding force for ISO 4762 M24 - 12.9 (see clamping pins)
*** Holding force for ISO 4762 M24x75 - 12.9 (see clamping pins)

WPS XL

Workpiece positioning system

Clamping pins

■ Clamping pins 1 piece

Type A Type B Type C

Application/customer benefits

- To be mounted to the workpiece
- Fixation and positioning on the clamping system WPS
- Wear-resistant due to an extra hard protective coating
- Large entry radius of the clamping pins for easy and safe loading

Technical features

- Centering pin Type A (Standard)
- Sword pin Type B (Positioning pin)
- Clamping pin Type C (with centering play 0.1 mm)

Standard equipment

Clamping pin with mounting screw

Clamping pin with thread M12 / M16

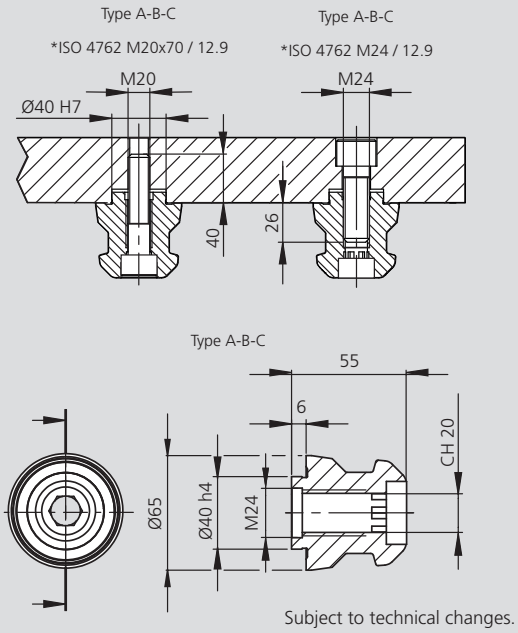

Subject to technical changes.

Clamping pin Ø26

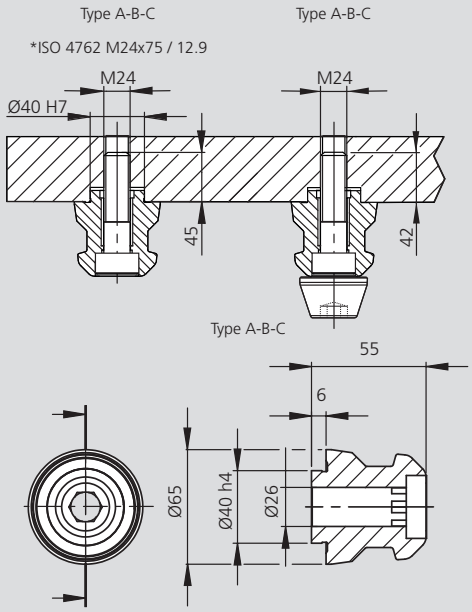

* included in delivery.

Order review

Type	Thread	Type A Id. No.	Type B Id. No.	Type C Id. No.	Weight [kg]
Clamping pin WPS XL	M20/ 12.9	467625	467626	467627	0.8
Clamping pin WPS XL	M24 / 12.9	467625	467626	467627	0.8
Clamping pin WPS XL	Ø26	467635	467636	467637	0.7
Pre-Locator WPS XL	M24		467628		0.9

Adaption ring Ø 40(g6) for positioning

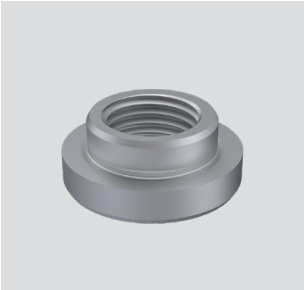

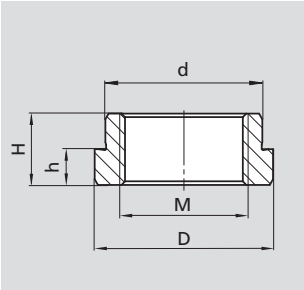

Adaption ring Ø		Dimensions			Id. No.
D (g6)	d (g6)	M	H	h	
Ø 40	Ø 25	M18 x 1.5	12	6	467680
Ø 40	Ø 30	M24 x 1.5	12	6	467681
Ø 40	Ø 34	M28 x 1.5	12	6	467682
Ø 40	Ø 36	M28 x 1.5	12	6	467683
Ø 40	Ø 40	M28 x 1.5	12	-	467684

Protective cover for grid plate

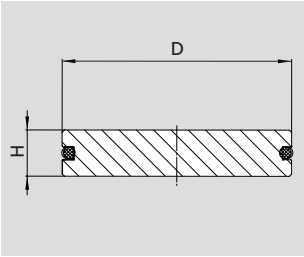

Protection cover Ø			
Type	D	H	Id. No.
D30x06	30	6	467685
D34x06	34	6	467686
D36x06	36	6	467687
D40x06	40	6	467688

Slide hammer (puller) for adapters and clamping pins

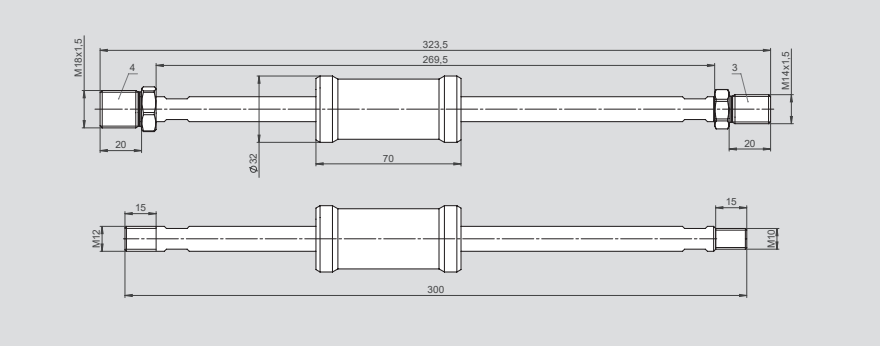

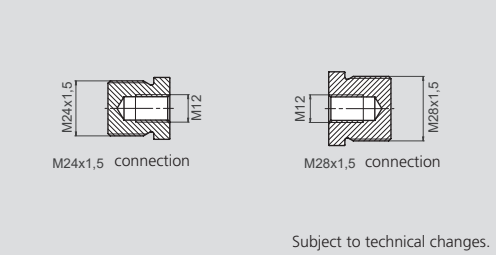

Standard equipment: Extractor and Connection (M14x1,5 und M18x1,5)

Slide hammer with connection for M10 and M12	Id. No
for adapter and clamping pins	460250

Connection for M12	Id. No
M24 x1.5 for M12	467689
M28 x1.5 for M12	467690

Pre-Instructor M24

Pre-Instructor M24	Id. No.
	467628

Transport pin

Transport pin	Id. No.
	467632

Notes

ZeroAct

Clamping module

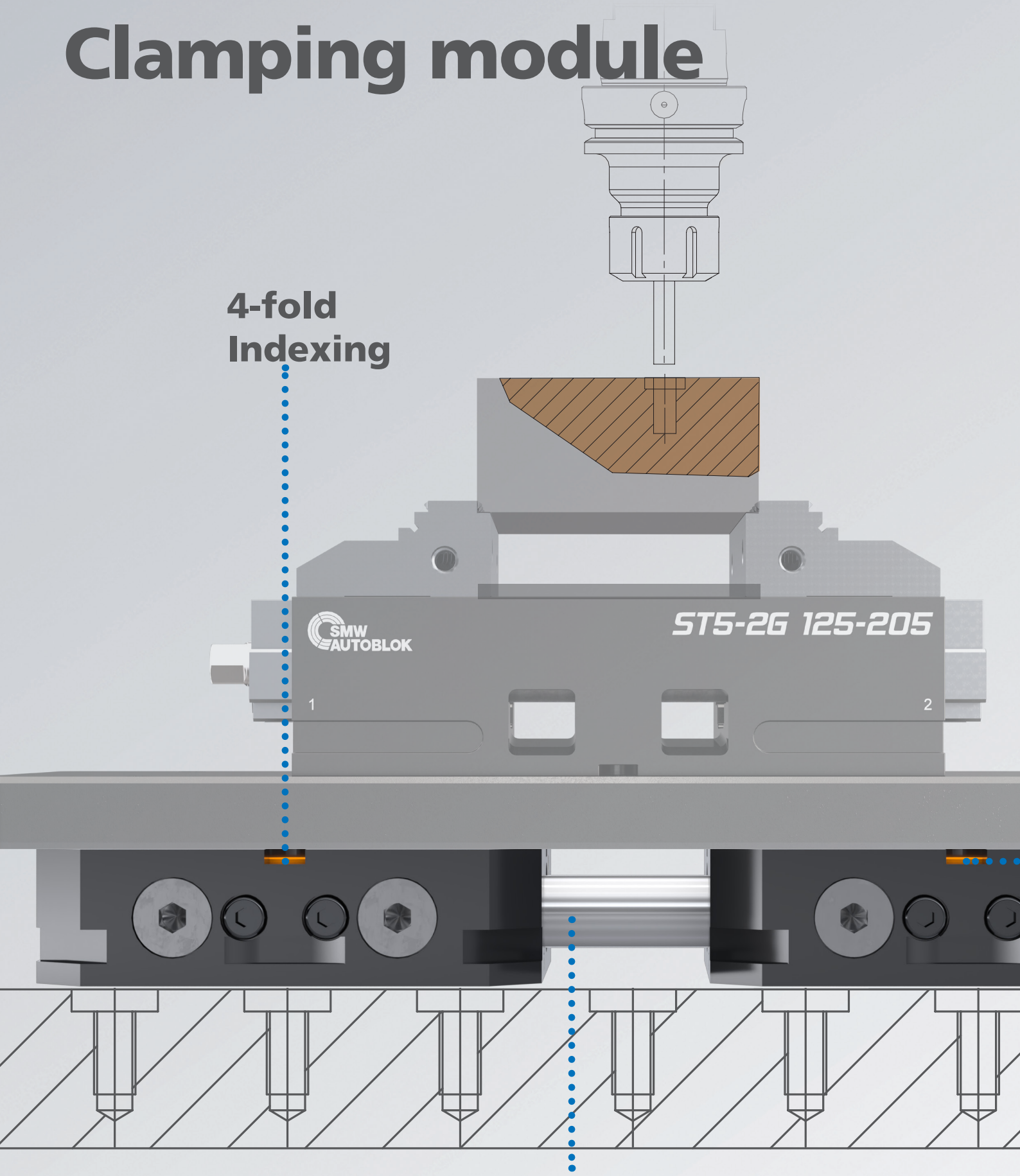

Application example - coupling clamping modules with central actuation

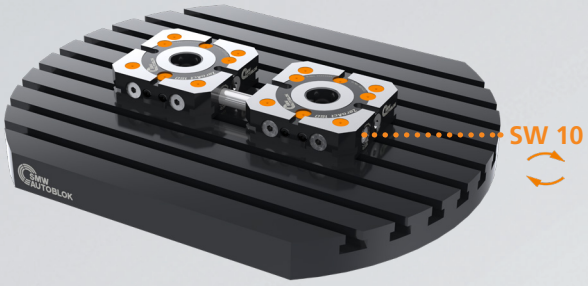

2 ZeroAct clamping modules in series
Grid dimension 200 mm

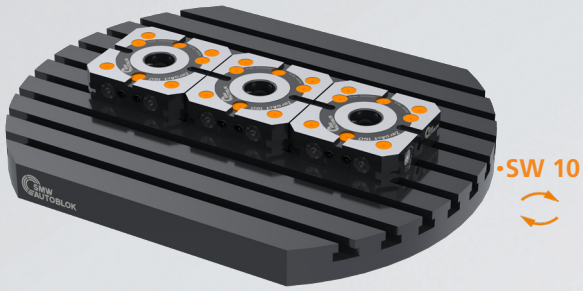

3 ZeroAct clamping modules in series
Grid dimension 150 mm

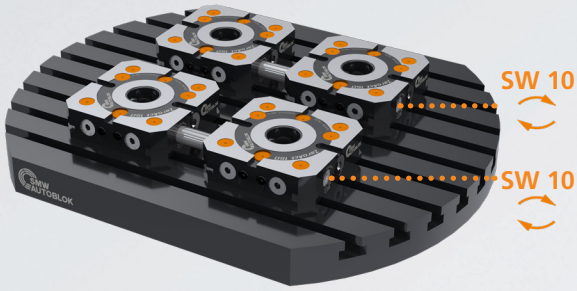

4 ZeroAct clamping modules in series
Grid dimension 200 mm

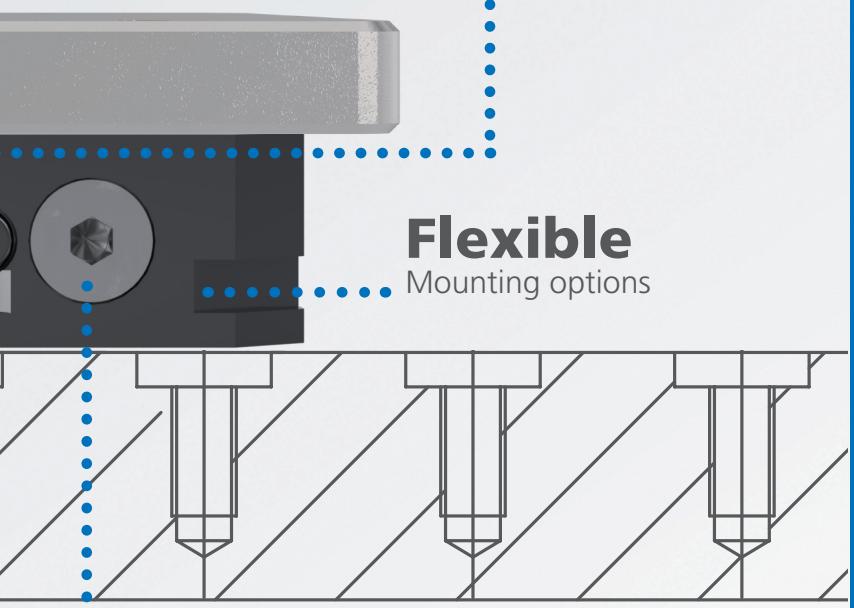

High precision
Cone flatness

Flexible
Mounting options

Quick actuation
(both sides) opening / closing
with only 270° rotation

Workholding glossary

Modularity
Modular system with a wide range of accessories enables flexible clamping of almost any workpiece geometry. In addition, the clamping bolts are also compatible with the WPS zero point clamping system.

High-precision positioning
The precise taper planning system ensures positive and secure clamping with the highest holding forces and maximum rigidity.

Low maintenance
Clamping modules are hermetically sealed, eliminating maintenance and increasing machine availability.

Efficiency in increase
Enormous reduction of set-up costs and maximum efficiency. In addition, no conventional clamping devices are required.

5-axis machining
Optimum accessibility, ideal for 5-axis machining without interfering contours.

ZeroAct

Manual zero point module

Clamping module

■ Connectable flexible zero point clamping module
■ Fully sealed

proofline® series
fully sealed – low maintenance

Application/customer benefits

- Up to 3 ZeroAct modules can be connected in a row with central actuation
- Single quick-actuation for the rapid opening and closing of the modules with only 270° rotation
- Extremely flat design
- Huge reduction of set-up times for highest efficiency
- Safe workpiece clamping with maximum holding forces and highest repeatability
- Flexible configurations for customized use
- 4 indexing slots
- Interchangeable to the proven zero point systems APS / WPS

Technical features

- Dimensions 150 x 150 mm, height 40 mm
- Pull-down force 15 kN
- Max. torque 15 Nm
- Repeatability < 0.005 mm
- Holding force 35 / 50 / 75 kN (M12 / M16) depending on thread of clamping pin
- 2 clamping slides for maximum hold while clamping
- **proofline®** = fully sealed - low maintenance

Standard equiment

- ZeroAct with 6 x mounting screw M12 x 50

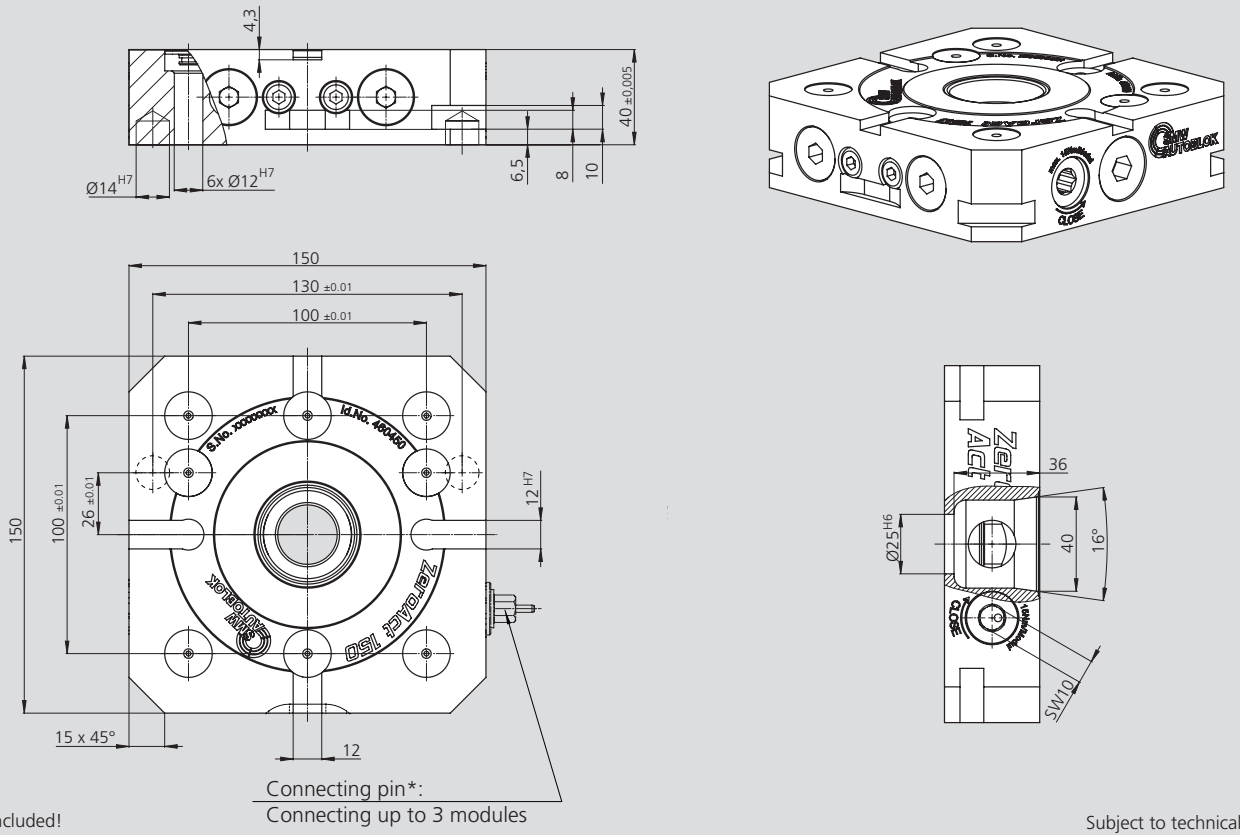

*Not included!

Subject to technical changes.

Technical data

SMW-AUTOBLOK Type		ZeroAct
Id. No.		460450
Pull-in force	kN	15
Repeatability	mm	< 0.005
Holding force M10	kN	35
Holding force M12	kN	50
Holding force M16	kN	75

Type A Type B Type C

Application/customer benefits

- Fixation and positioning on the clamping modules ZeroAct
- Wear-resistant due to an extra hard protective coating
- Large entry radius of the clamping pins for easy and safe loading

Technical features

- Centering pin type A (standard)
- Sword pin type B (positioning pin)
- Clamping pin type C (with centering play 0.1 mm)

Standard equipment

Clamping pin with mounting screw

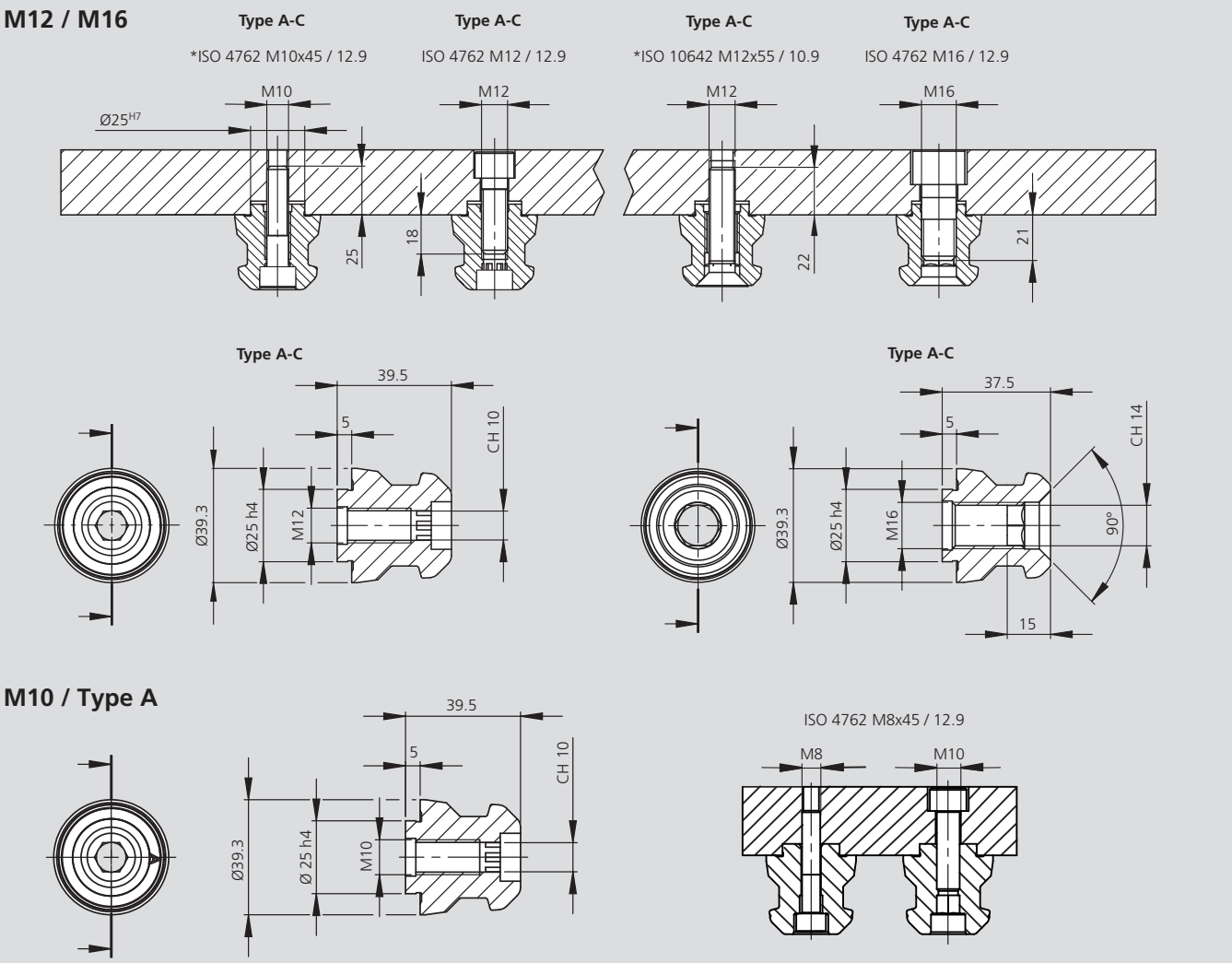

Subject to technical changes.

Order review

Type	Thread clamping pin / mounting screw class	Type A Id. No.	Type B Id. No.	Type C Id. No.	Weight [kg]
Clamping pin ZeroAct	M10 / 12.9	467008	467308	467309	0.3
Clamping pin ZeroAct	M12 / 12.9	46162355	46162356	46162357	0.3
Clamping pin ZeroAct	M16 / 12.9	46162455	46162456	46162457	0.3

ZeroAct

Manual zero point module

Accessories

- Coupling pin
- Clamping disk/ Clamping claw
- Distance gauge

Coupling pin

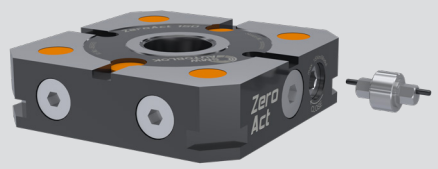

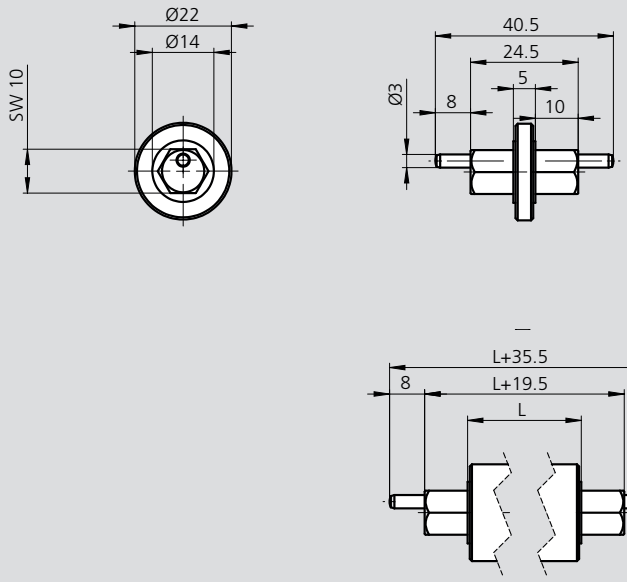

Coupling pin in line

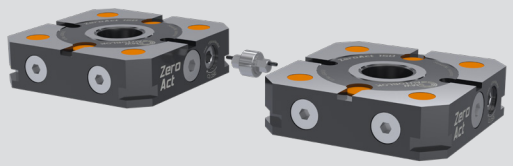

Subject to technical changes.

Order review

Type	Grid distance	Id. No.
ZeroAct connecting pin length 5 mm	150 mm	460457
ZeroAct connecting pin length 55 mm	200 mm	460474
ZeroAct connecting pin length 105 mm	250 mm	460475
ZeroAct connecting pin length 44 - 66 mm	63 - 70 T-slot	467275

Clamping disk/ Clamping claw

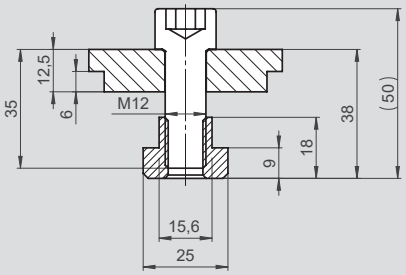

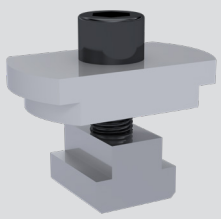

Claming disk	T-Nut	Id No.
NST14-M12	14	467289
NST16-M12	16	467340
NST18-M12	18	467341
NST20-M12	20	467342

Distance gauge

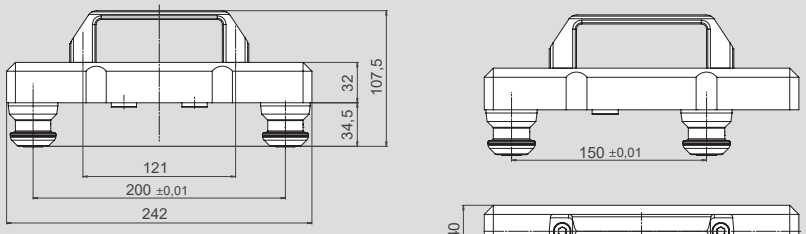

Distance gauge	Id. No.
	467338

Notes

5-axis vises from SMW-AUTOBLOK

5-axis vises ensure the following advantages:

- ST5-2G also suitable for OP 20 use
- Jaws with SinterGrip clamping inserts for clamping of workpieces with lowest depth and without pre-marking
- Compact design with best accessibility of the machine spindle
- High adjustable clamping forces
- Interfaces for all well known zero point clamping systems
- Wide range of standard accessories

5-axis vises

Page 130

ST5-2G

5-axis vise
ST5-2G 080 and ST5-2G 125

- Sealed spindle for protection against contamination
- Self-centering clamping
- Very compact design
- Large clamping range
- With SinterGrip clamping insert jaws
- Interfaces for zero point clamping systems

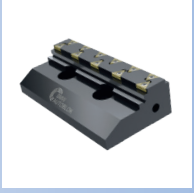

Page 138

ST5-2G Accessories

Jaws and accessories

- Top jaws
- Pull-down jaws
- Pendulum jaws
- Mounting devices
- Clamps and positioning keys
- Grip inserts
- Stop pins ALB

Page 150

IMG

5-axis vise

- Sealed spindle for protection against contamination
- Self-centering clamping
- Very compact design
- Large clamping range
- With SinterGrip clamping insert jaws
- Interfaces for zero point clamping systems

Page 160

IMG Accessories

Jaws and Accessories

- Top jaws
- Spindle groups
- Retainer plates

ST5-2G

Sealed 5-axis self-centering vise

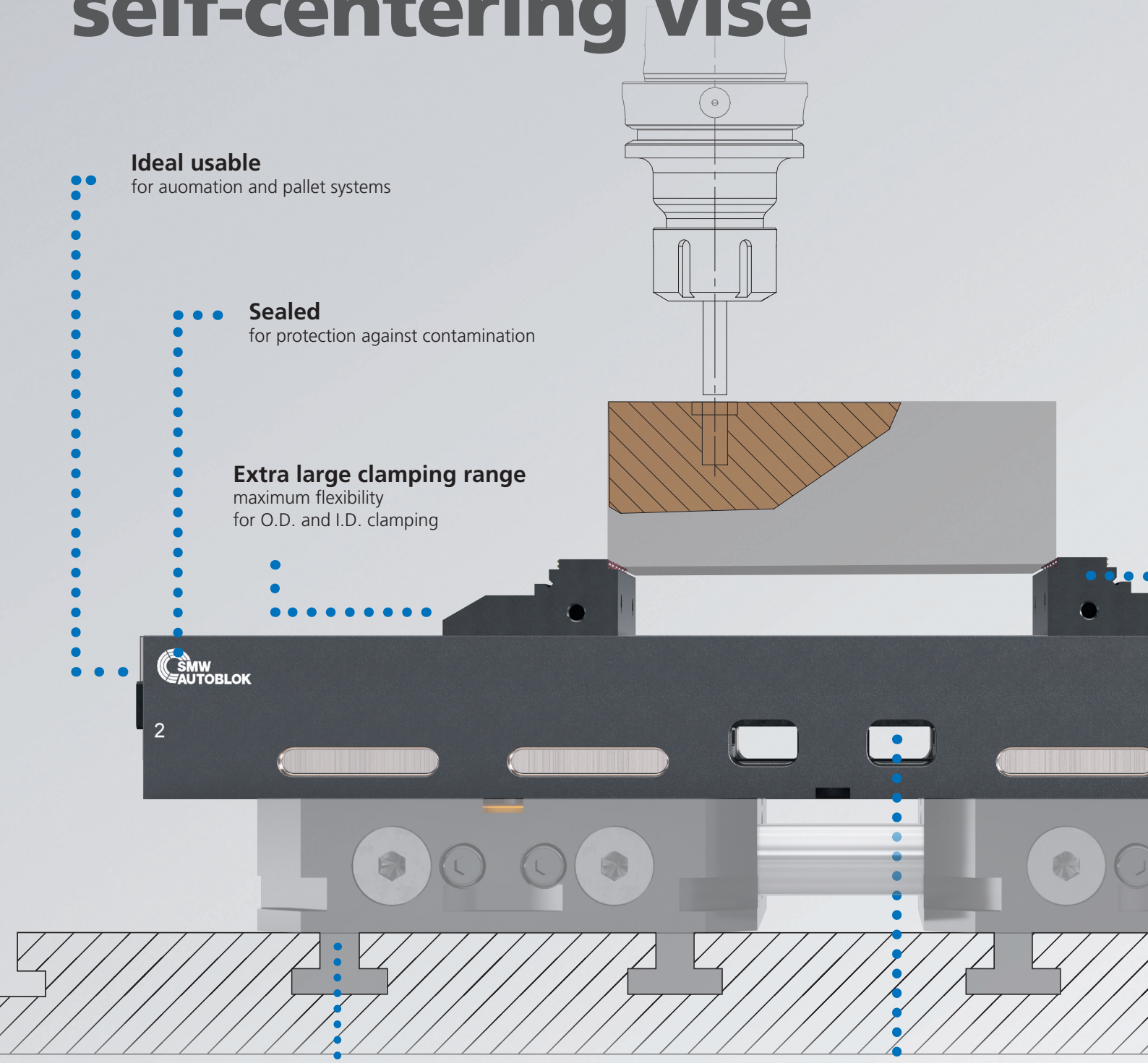

Ideal usable
for auomation and pallet systems

Sealed
for protection against contamination

Extra large clamping range
maximum flexibility
for O.D. and I.D. clamping

Flexible mounting
on the machine table
via clamps (optional)

Interfaces below

for zero point clamping systems and mounting holes as a standard

Basic top jaws with gripper

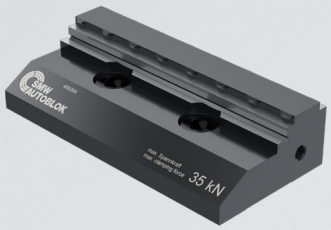

Premium top jaws with SinterGrip

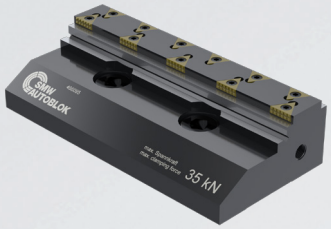

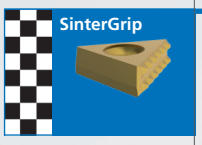

1

Jaw versions:
BASIC - with Gripper top jaws
PREMIUM - with SinterGrip top jaws
Reversible jaws for lowest clamping depth of workpieces without pre-stamping

Guideway hardened and precision ground
for highest precision and repeatability

Manual actuation
sealed from both sides with highest transmission offers highest clamping forces for maximum hold of the workpiece and highest process reliability

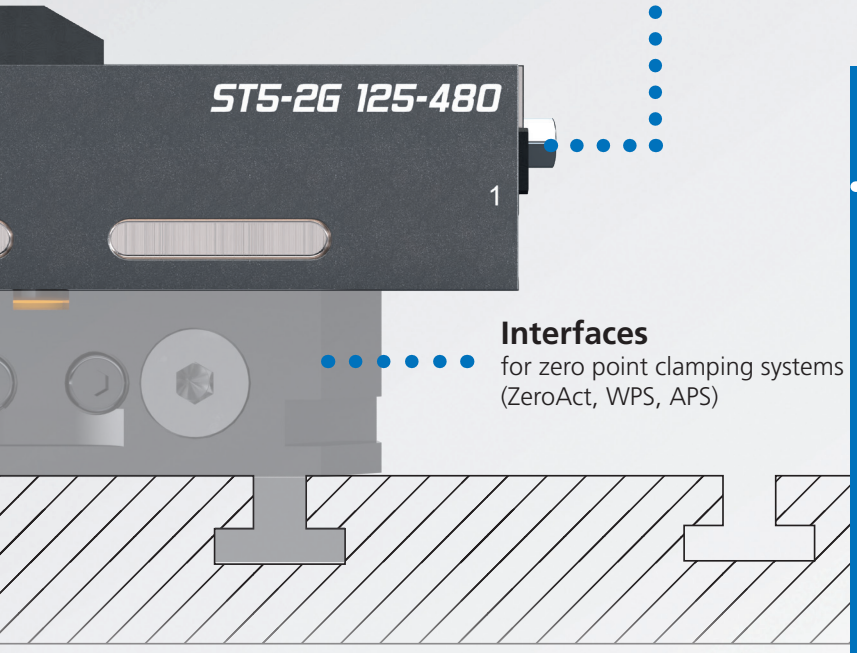

Interfaces
for zero point clamping systems (ZeroAct, WPS, APS)

Chip discharge window
guarantees optimized chip flow

Clamping glossary

Extra large clamping range
offers maximum application flexibility
For external and internal clamping

Spindle
Completely sealed, low-dirt spindle.

5-axis machining
Optimal accessibility for 5-side machining without interfering contours. Ideally suited for automation and pallet systems.

ST5-2G

5-axis self-centering vise

■ Sealed – protected spindle
■ Self-centering

Application/customer benefits

- Compact design for best accessibility and with large chip evacuation windows
- Large clamping range, for external and internal clamping
- Ideal for OP 10 and OP 20
- Self-centering clamping with highest repeatability
- Extensive range of jaws, to accommodate quick and easy changeover
- Different interfaces for mounting integrated

Technical features

- Sealed spindle for protection against contamination
- Sided chip discharge window to guarantee optimal chip and coolant discharge
- Base body manganese-phosphated, for protection against corrosion and cold welding
- Clamping force: up to 18 kN (ST5-2G 080), up to 35 kN (ST5-2G 125)
- Manual actuation from both sides
- Interface for zero point clamping systems

Standard equipment

- ST5-2G with wrench

Size comparison

ST5-2G **080-120**

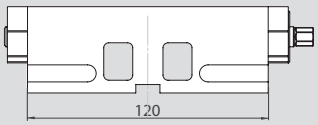

ST5-2G **125-170**

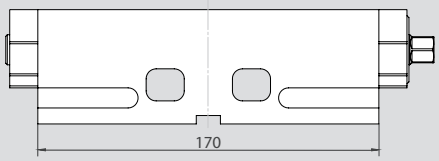

ST5-2G **125-205**

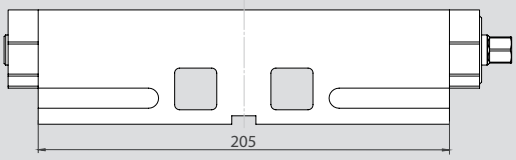

ST5-2G **125-320**

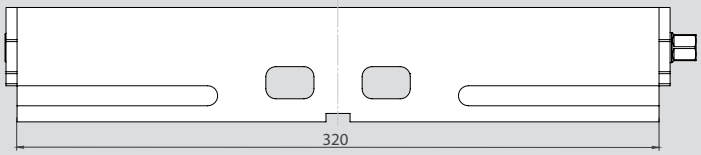

ST5-2G **125-480**

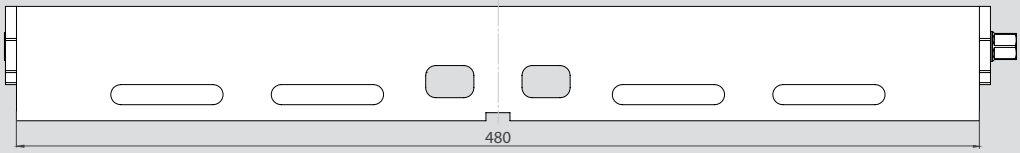

ST5-2G **125-625**

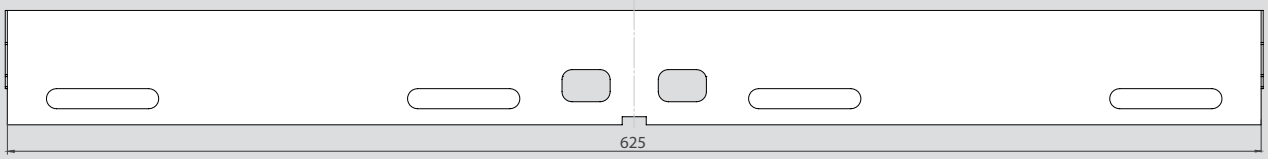

5-axis self-centering vise

ST5-2G 080

- Sealed – protected spindle
- Self-centering

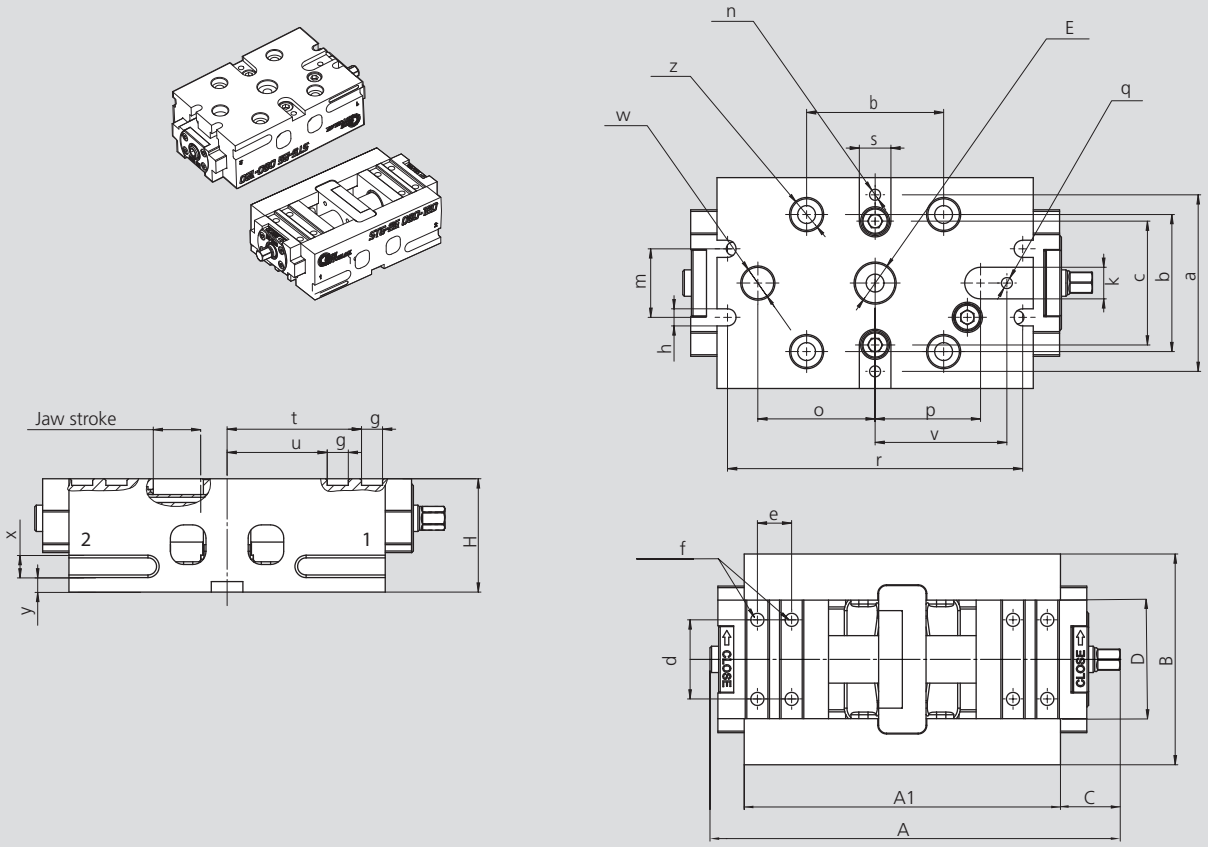

Subject to technical changes. For more detailed information please ask our customer service.

SMW-AUTOBLOK Type ST5-2G Id. No.			080-120 466065
Overall length	**A**	mm	154
Base length	**A1**	mm	120
Width	**B**	mm	80
	C	mm	22.5
Jaw width	**D**	mm	45
Fitting / depth / center thread	**E**	mm	15H6 / 5.2 / M8x8.5
	H	mm	43
	a	mm	67
	b	mm	52
	c	mm	47
	d	mm	30
	e	mm	13
Thread / thread depth	**f**	mm	M6 / 9
Slot width	**g**	mm	8
	h	mm	6.5
	k	mm	12H7 / 4.2
	m	mm	26
Fixing hole	**n**	mm	M5 / 10
	o	mm	44.5
	p	mm	40
	q	mm	M5 / 10.5
	r	mm	112
	s	mm	12H7 / 4.2
Max. / min.	**t**	mm	51 / 33
Max. / min.	**u**	mm	38 / 20
	v	mm	50
	w	mm	12H7 / 6.5
	x	mm	8.5 / 3.2
	y	mm	5.5
Centering / center thread	**z**	mm	12H7 / 5.2 / M8x8
Max. Clamping force of all clamping points		kN	18
At max. torque (Md) / hexagonal		Nm	35 / 8
Stroke per jaw		mm	18
Weight (without jaws)		kg	2.49

ST5-2G 125

5-axis self-centering vise

- Sealed – protected spindle
- Self-centering

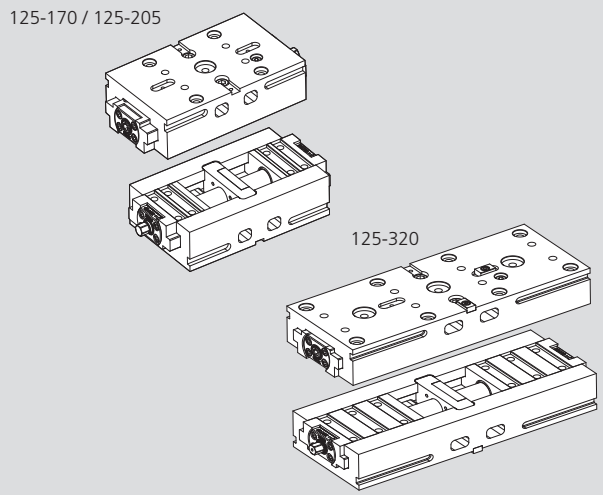

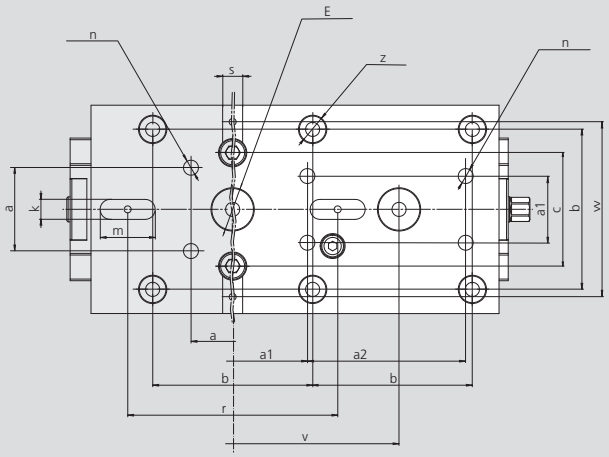

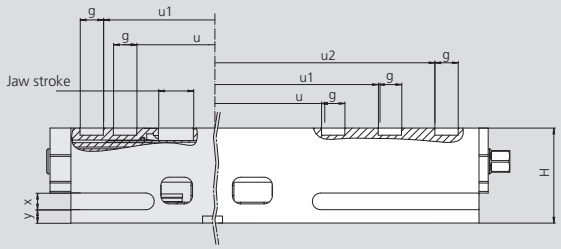

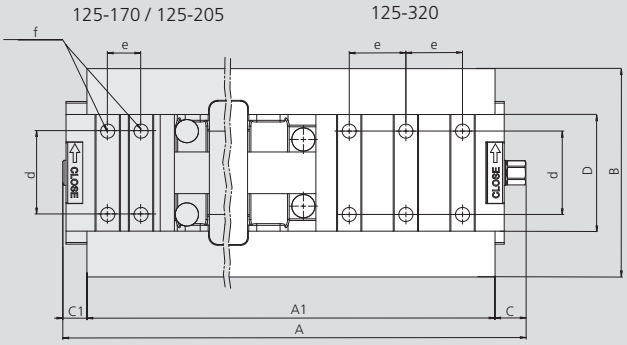

Subject to technical changes. For more detailed information please ask our customer service.

SMW-AUTOBLOK Typ ST5-2G Id. No.			125-170 466057	125-205 466056	125-320 466224
Overall length	**A**	mm	213.5	253	344.5
Base length	**A1**	mm	170	205	320
Width	**B**	mm	125	125	125
	C	mm	27.5	31	18.5
	C1	mm	16	17	6
Jaw width	**D**	mm	70	70	70
Fitting / depth / center thread	**E**	mm	25H6 / 5.5 / M10x14.5	25H6 / 5.5 / M10x14.5	25H6 / 5.5 / M10x14.5
	H	mm	57	57	57
	a	mm	50	50	-
	a1	mm	-	-	90 / 40
	a2	mm	-	-	95
	b	mm	96	96	96
	c	mm	68	68	68
	d	mm	50	50	50
	e	mm	20	20	34
Thread / thread depth	**f**	mm	M10 / 17	M10 / 17	M10 / 13
Slot width	**g**	mm	14	14	14
	k	mm	12H7 / 4.2	12H7 / 4.2	12H7 / 4.2
	m	mm	33	33	33
Fixing hole	**n**	mm	Ø9	Ø9	Ø9
	r	mm	126	126	
	s	mm	12H7 / 4.2	12H7 / 4.2	12H7 / 4.2
Max. / min.	**u**	mm	47 / 25.5	65.5 / 25.5	65.5 / 25.5
Max. / min.	**u1**	mm	67 / 45.5	85.5 / 45.5	99.5 / 59.5
Max. / min.	**u2**	mm	-	-	133.5 / 93.5
	v	mm	-	-	200
	w	mm	105	105	105
	x	mm	10 / 5.2	10 / 5.2	10 / 5.2
	y	mm	8	8	8
Centering / center thread	**z**	mm	16H7 / 5.5 / M10x13	16H7 / 5.5 / M10x13	16H7 / 5.5 / M10x13
Max. Clamping force of all clamping points		kN	35	35	35
At max. torque (Md) / hexagonal		Nm	70 / 13	70 / 13	70 / 13
Stroke per jaw		mm	21.5	40	40
Weight (without jaws)		kg	7.63	8.59	13.68

5-axis self-centering vise

ST5-2G 125

- Sealed – protected spindle
- Self-centering

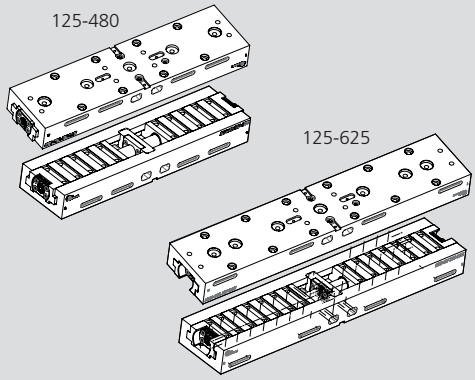

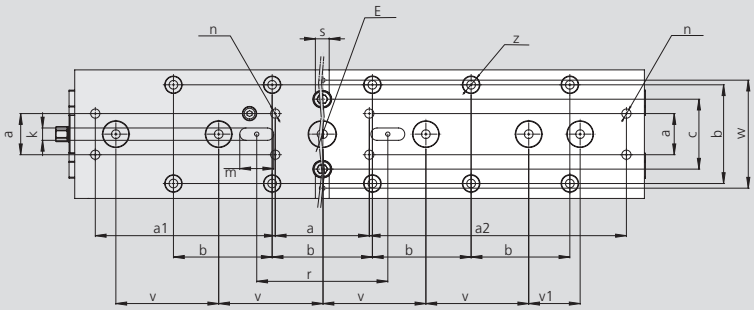

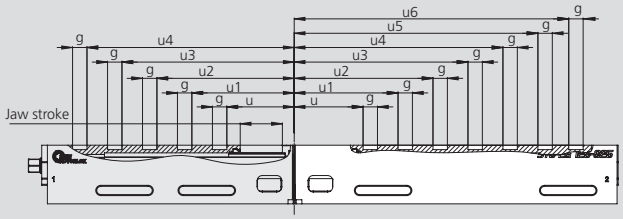

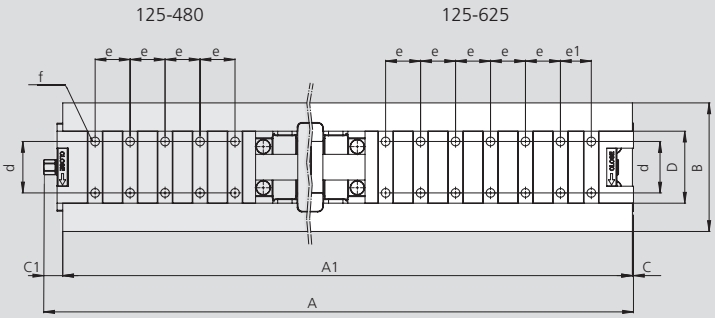

Subject to technical changes. For more detailed information please ask our customer service.

SMW-AUTOBLOK Typ ST5-2G Id. No.			125-480 466602	125-625 466645
Overall length	**A**	mm	504.5	-
Base length	**A1**	mm	480	625
Width	**B**	mm	125	125
	C	mm	18.5	1
	C1	mm	6	-
Jaw width	**D**	mm	70	70
Fitting / depth / center thread	**E**	mm	25H6 / 5.5 / M10x12	25H6 / 5.5 / M10x12
	H	mm	57	57
	a	mm	90 / 40	90 / 40
	a1	mm	175	-
	a2		-	250
	b	mm	96	96
	c	mm	68	68
	d	mm	50	50
	e / e1	mm	34 / -	34 / 30
Thread / thread depth	**f**	mm	M10 / 17	M10 / 17
Slot width	**g**	mm	14	14
	k	mm	12H7 / 4.2	12H7 / 4.2
	m	mm	33	33
Fixing hole	**n**	mm	Ø9	Ø9
	r	mm	126	126
	s	mm	12H7 / 4.2	12H7 / 4.2
Max. / min.	**u**	mm	65.5 / 25.5	65.5 / 25.5
Max. / min.	**u1**	mm	99.5 / 59.5	99.5 / 59.5
Max. / min.	**u2**	mm	133.5 / 93.5	133.5 / 93.5
Max. / min.	**u3**	mm	167.5 / 127.5	167.5 / 127.5
Max. / min.	**u4**	mm	201.5 / 161.5	201.5 / 161.5
Max. / min.	**u5**	mm	-	235.5 / 195.5
Max. / min.	**u6**	mm	-	265.5 / 225.5
	v	mm	100	100
	v1	mm	-	50
	w	mm	105	105
	x	mm	10 / 5.2	10 / 5.2
	y	mm	8	8
Centering / center thread	**z**	mm	16H7 / 5.5 / M10x13	16H7 / 5.5 / M10x13
Max. Clamping force of all clamping points		kN	35	35
At max. torque (Md) / hexagonal		Nm	70 / 13	70 / 13
Stroke per jaw		mm	40	40
Weight (without jaws)		kg	21.65	28.11

ST5-2G

5-axis self-centering vise

■ Clamping range

080-120

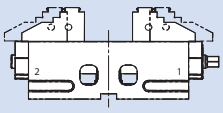

125-170 / 125-205

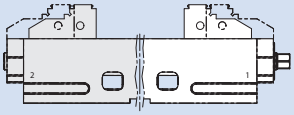

125-320

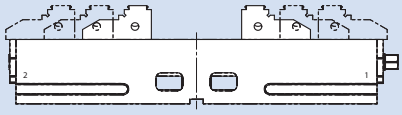

125-480 / 125-625

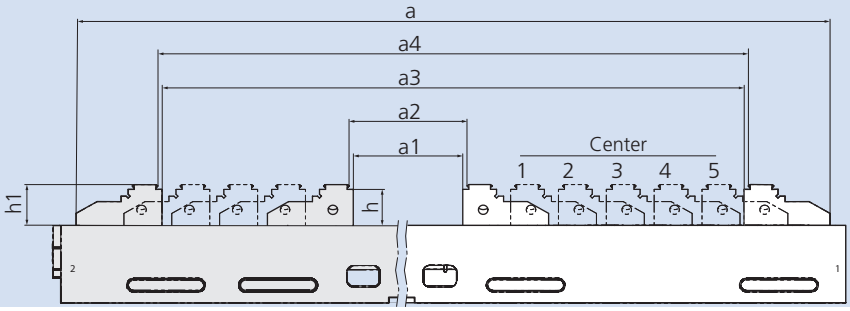

Type		080-120	125-170	125-205	125-320	125-480	125-625
Interference contour	a	156	202	242	338	474	602
Inner position	a1	0-36	0-43	0-80	0-80	0-80	0-80
Inner position	a2	6-42	6-49	6-86	6-86	6-86	6-86
Center 1		-	-	-	68-148	68-148	68-148
Center 1		-	-	-	74-154	74-154	74-154
Center 2		-	-	-	-	136-216	136-216
Center 2		-	-	-	-	142-222	142-222
Center 3		-	-	-	-	204-284	204-284
Center 3		-	-	-	-	210-290	210-290
Center 4		-	-	-	-	-	272-352
Center 4		-	-	-	-	-	278-358
Center 5		-	-	-	-	-	340-420
Center 5		-	-	-	-	-	346-426
Outer position	a3	26-62	40-83	40-120	136-216	272-352	400-480
Outer position	a4	32-68	46-89	46-126	142-222	278-358	406-486
Support height	h	24	26.5	26.5	26.5	26.5	26.5
Jaw height	h1	27.5	30	30	30	30	30

080-120

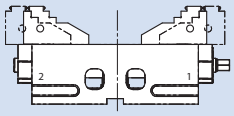

125-170 / 125-205

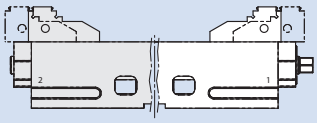

125-320

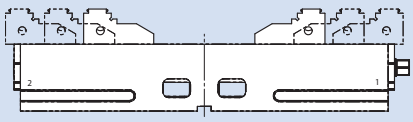

125-480 / 125-625

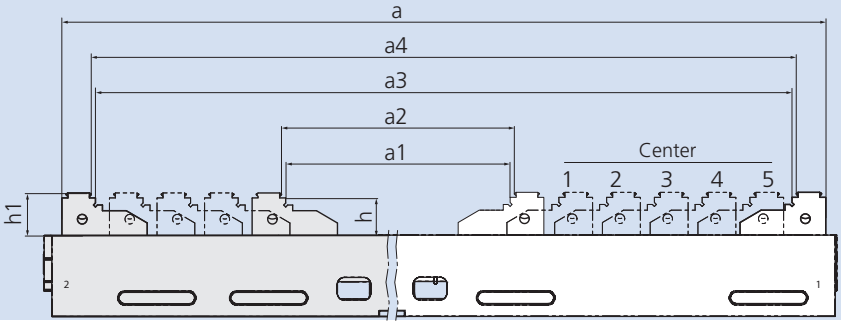

Type		080-120	125-170	125-205	125-320	125-480	125-625
Interference contour	a	158	210	250	346	482	610
Inner position	a1	59-95	82-125	82-162	82-162	82-162	82-162
Inner position	a2	65-101	88-131	88-168	88-168	88-168	88-168
Center 1		-	-	-	122-202	150-230	150-230
Center 1		-	-	-	128-208	156-236	156-236
Center 2		-	-	-	-	218-298	218-298
Center 2		-	-	-	-	224-304	224-304
Center 3		-	-	-	-	286-366	286-366
Center 3		-	-	-	-	292-372	292-372
Center 4		-	-	-	-	-	354-434
Center 4		-	-	-	-	-	360-440
Center 5		-	-	-	-	-	422-502
Center 5		-	-	-	-	-	428-508
Outer position	a3	85-121	122-165	122-202	218-298	354-434	482-562
Outer position	a4	91-127	128-171	128-208	224-304	360-440	488-568

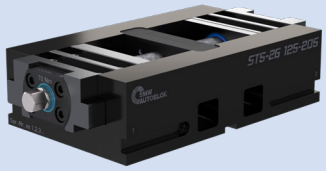

Set without jaws consisting of:

ST5-2G Self-centering vise with key

Type	Clamping range [mm]	Id. No.
ST5-2G 080-120	0-127	466065
ST5-2G 125-170	0-168	466057
ST5-2G 125-205	0-208	466056
ST5-2G 125-320	0-304	466224
ST5-2G 125-480	0-440	466602
ST5-2G 125-625	0-568	466645

Set BASIC consisting of:

ST5-2G Self-centering vise with key
+ 1 pair top jaws BASIC gripper incl. mounting screws*

Type	Clamping range [mm]	Id. No.
ST5-2G 080-120	0-127	466110
ST5-2G 125-170	0-168	466058
ST5-2G 125-205	0-208	466120
ST5-2G 125-320	0-304	466260
ST5-2G 125-480	0-440	466600
ST5-2G 125-625	0-568	466640

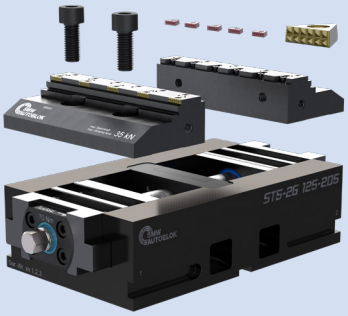

Set PREMIUM STD consisting of:

ST5-2G Self-centering vise with key
+ 1 pair top jaws SinterGrip incl. mounting screws
+ 12 pieces SinterGrip clamping inserts STD incl. mounting screws*
+ 12 pieces protection covers*

Type	Clamping range [mm]	Id. No.
ST5-2G 080-120*	0-127	466111
ST5-2G 125-170	0-168	466059
ST5-2G 125-205	0-208	466121
ST5-2G 125-320	0-304	466261
ST5-2G 125-480	0-440	466601
ST5-2G 125-625	0-568	466641

Set PREMIUM ALU consisting of:

ST5-2G Self-centering vise with key
+ 1 pair top jaws SinterGrip incl. mounting screws
+ 12 pieces SinterGrip clamping inserts ALU incl. mounting screws*
+ 12 pieces protection covers*

Type	Clamping range [mm]	Id. No.
ST5-2G 080-120*	0-127	466111A
ST5-2G 125-170	0-168	466059A
ST5-2G 125-205	0-208	466121A
ST5-2G 125-320	0-304	466261A
ST5-2G 125-480	0-440	466601A
ST5-2G 125-625	0-568	466641A

Set PREMIUM HRC consisting of:

ST5-2G Self-centering vise with key
+ 1 pair top jaws SinterGrip incl. mounting screws
+ 12 pieces SinterGrip clamping inserts HRC incl. mounting screws*
+ 12 pieces protection covers*

Type	Clamping range [mm]	Id. No.
ST5-2G 080-120*	0-127	466111H
ST5-2G 125-170	0-168	466059H
ST5-2G 125-205	0-208	466121H
ST5-2G 125-320	0-304	466261H
ST5-2G 125-480	0-440	466601H
ST5-2G 125-625	0-568	466641H

* consists of 8 pieces

Top jaws BASIC gripper

1 set = 2 pieces; incl. 4 pcs. mounting screws

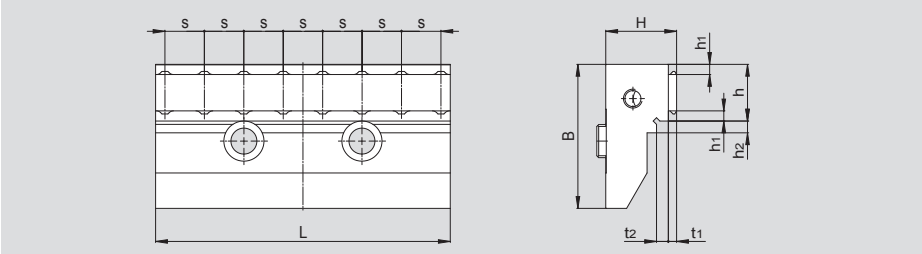

Type	Id. No.	L [mm]	B [mm]	H [mm]	s [mm]	h [mm]	h1 [mm]	h2 [mm]	t1 [mm]	t2 [mm]	[kg]
ST5-2G 080	466107	79.8	47	27.5	10.5 (7x)	18.5	3	5	3.5	4.5	1.06
ST5-2G 125	466094	124.8	61	30	16.7 (7x)	24	3	5	3.5	5	2.55

Top jaws PREMIUM SinterGrip

SinterGrip
Page 302

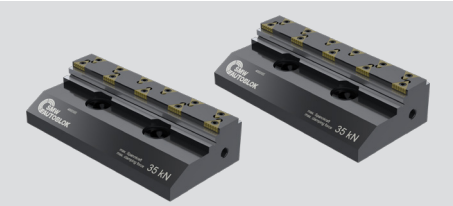

1 set = 2 pieces, without SinterGrip clamping inserts incl. 4 pcs. mounting screws

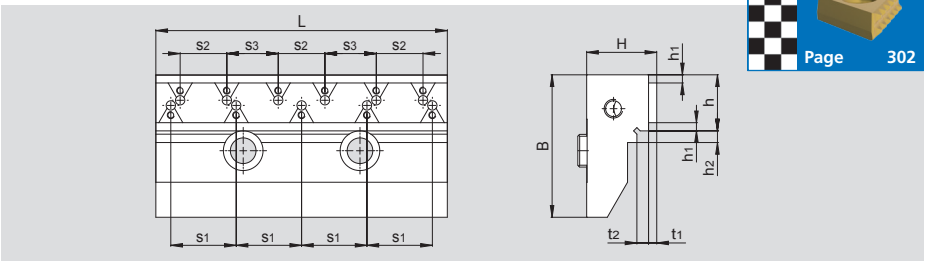

Type	Id. No.	L [mm]	B [mm]	H [mm]	s1 [mm]	s2 [mm]	s3 [mm]	h [mm]	h1 [mm]	h2 [mm]	t1 [mm]	t2 [mm]	[kg]	SinterGrip / jaw
ST5-2G 080	466108	79.8	47	27.5	27 (2x)	22 (3x)	-	18.5	3.5	5	3.5	4.5	1.04	4+3
ST5-2G 125	466095	124.8	61	30	28 (4x)	20 (3x)	22 (2x)	24	3.5	5	3.5	5	2.41	6+5

Top jaws, smooth

1 set = 2 pieces; incl. 4 pcs. mounting screws

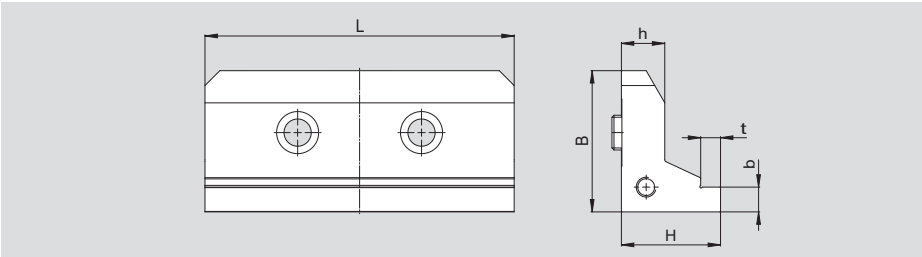

Type	Id. No.	L [mm]	B [mm]	H [mm]	h [mm]	b [mm]	t [mm]	[kg]
ST5-2G 080	466200	79.8	38.5	30	15.5	8	6	0.9
ST5-2G 125	466199	124.8	57	40	17.5	10	8	2.6

Top jaws, low design, material: 1.0503

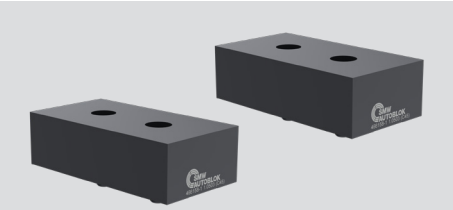

1 set = 2 pieces; incl. 4 pcs. mounting screws

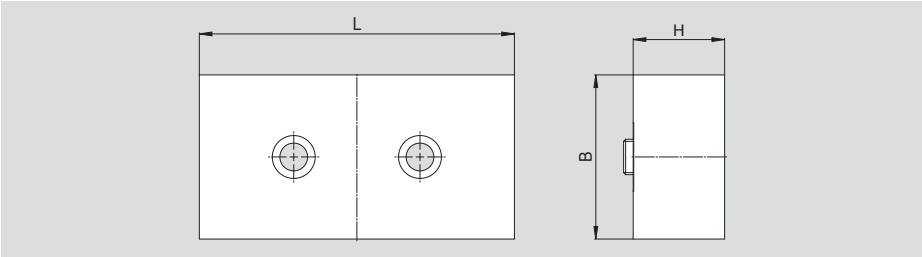

Type	Id. No.	L [mm]	B [mm]	H [mm]	[kg]
ST5-2G 080	466157-1	79.8	50	29.7	1.8
ST5-2G 080*	466333-1	79.8	50	29.7	0.7
ST5-2G 125	466158-1	124.8	65	36.2	4.5
ST5-2G 125*	466334-1	124.8	65	36.2	1.7

* Aluminium version

Soft top jaws, high design, material 1.0503

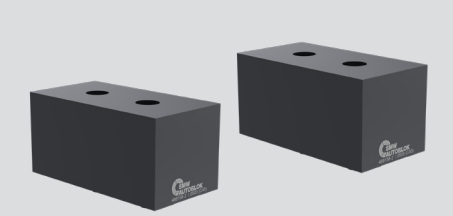

1 set = 2 pieces; incl. 4 pcs. mounting screws

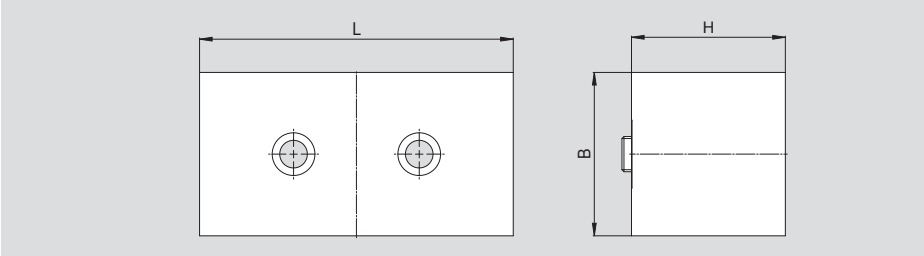

Type	Id. No.	L [mm]	B [mm]	H [mm]	[kg]
ST5-2G 080	466157-2	79.8	55	52.7	3.5
ST5-2G 080*	466333-2	79.8	55	52.7	1.2
ST5-2G 125	466158-2	124.8	65	61.2	7.5
ST5-2G 125*	466334-2	124.8	65	61.2	2.8

* Aluminum version

SinterGrip Page 302

Top jaws BASIC gripper, for round workpieces

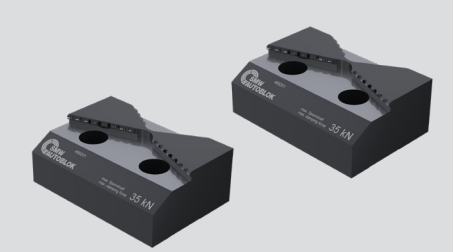

1 set = 2 pieces; incl. 4 pcs. mounting screws

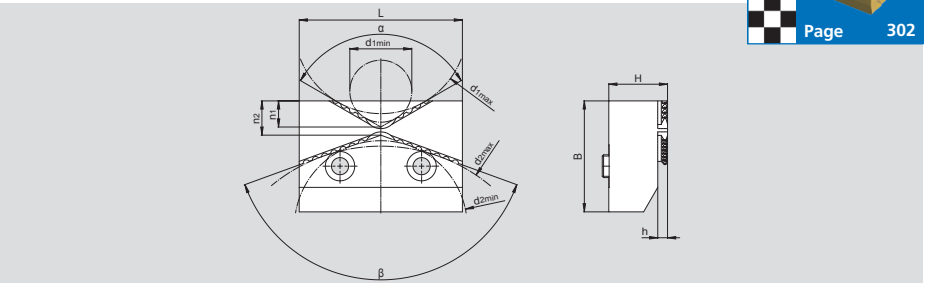

Type	Id. No.	L [mm]	B [mm]	H [mm]	h [mm]	d1min [mm]	d1max [mm]	d2min [mm]	d2max [mm]	n1 [mm]	n2 [mm]	α	β	[kg]	Clamping range [mm]
ST5-2G 080	466282	65	45	20	4	18.2	67.5	65.8	124	10	15	120°	140°	0.8	Ø020-120
ST5-2G 125	466201	100	68	36	6	38	106	106	210	16	21	120°	140°	3.2	Ø038-210

Top jaws, smooth, prism jaws

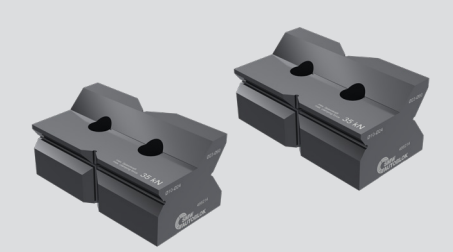

1 set = 2 pieces; incl. 4 pcs. mounting screws

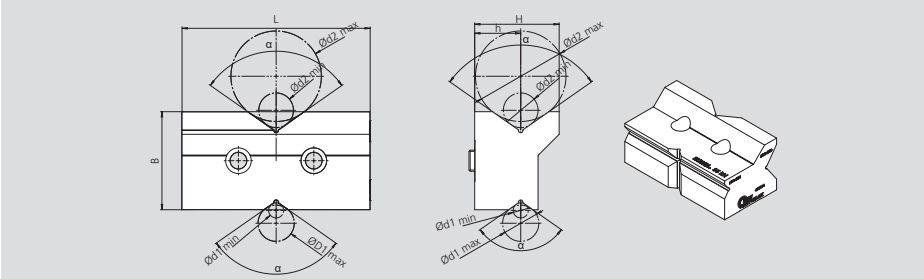

Type	Id. No.	L [mm]	B [mm]	H [mm]	h [mm]	d1min [mm]	d1max [mm]	d2min [mm]	d2max [mm]	α	[kg]	Clamping range [mm]
ST5-2G 080	466215	79.8	48	38	22	5	13	13	36	110°	1.7	Ø5-36
ST5-2G 125	466214	124.8	65	56	30.5	10	24	23	60	110°	5.5	Ø10-60

Top jaws, system „LANG“

1 set = 2 pieces; incl. 4 pcs. mounting screws

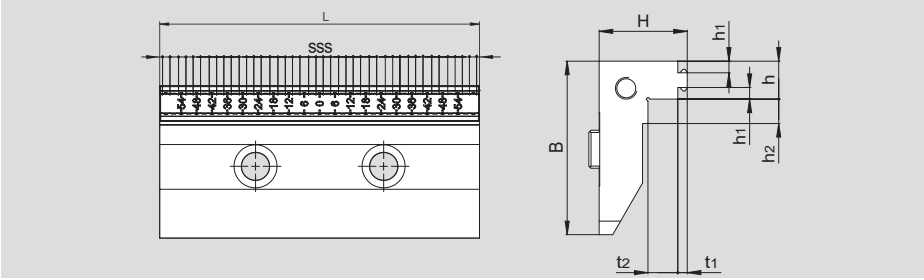

Type	Id. No.	L [mm]	B [mm]	H [mm]	s [mm]	h [mm]	h1 [mm]	h2 [mm]	t1 [mm]	t2 [mm]	[kg]
ST5-2G 080	466355	77	41	22	3 (25x)	12	2.7	8	3	8.5	0.6
ST5-2G 125	466349	124.8	59.5	32	3 (41x)	14	2.7	9	3	11	2.1

Top jaws BASIC gripper, narrow design

1 set = 2 pieces; incl. 4 pcs. mounting screws

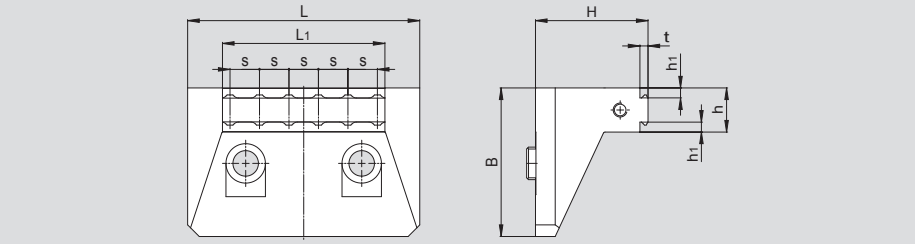

Type	Id. No.	L [mm]	B [mm]	H [mm]	L1 [mm]	s [mm]	t [mm]	h [mm]	h1 [mm]	[kg]
ST5-2G 080	466164	60	47	35.5	45	12.7	3.5	19	3	0.8
ST5-2G 125	466166	100	64	48.5	70	12.7	3.5	19	3	2.4

Top jaws PREMIUM SinterGrip, narrow design

SinterGrip Page 302

1 set = 2 pieces, without SinterGrip clamping inserts incl. 4 pcs. mounting screws

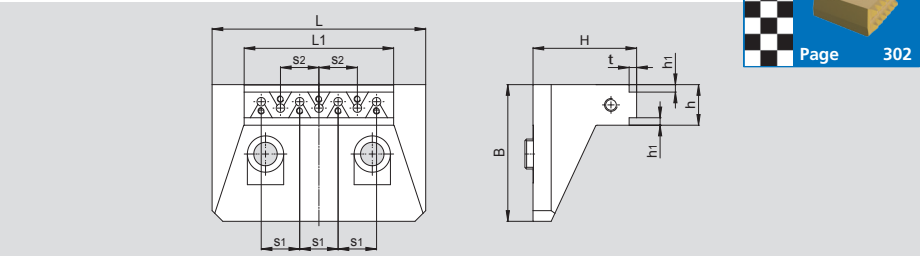

Type	Id. No.	L [mm]	B [mm]	H [mm]	L1 [mm]	s1 [mm]	s2 [mm]	h [mm]	h1 [mm]	t [mm]	[kg]	SinterGrip per jaw
ST5-2G 080	466165	60	47	35.5	45	16	16	19	3.5	3.5	0.75	3+2
ST5-2G 125	466167	100	64	48.5	70	18	18	19	3.5	3.5	2.4	4+3

Top jaws BASIC gripper, extended clamping depth

1 set = 2 pieces; incl. 4 pcs. mounting screws

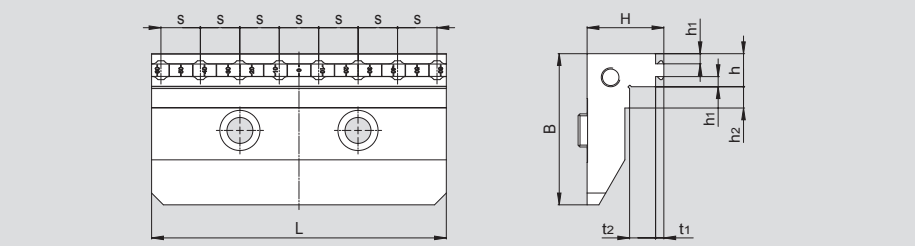

Type	Id. No.	L [mm]	B [mm]	H [mm]	s [mm]	h [mm]	h1 [mm]	h2 [mm]	t1 [mm]	t2 [mm]	[kg]
ST5-2G 080	466187	77	41	22	10.5 (7x)	12	3	8	3.5	8	0.6
ST5-2G 125	466185	124.8	59.5	32	16.7 (7x)	14	3	9	3.5	10.5	2.07

Top jaws PREMIUM SinterGrip, extended clamping depth

SinterGrip Page 302

1 set = 2 pieces, without SinterGrip clamping inserts incl. 4 pcs. mounting screws

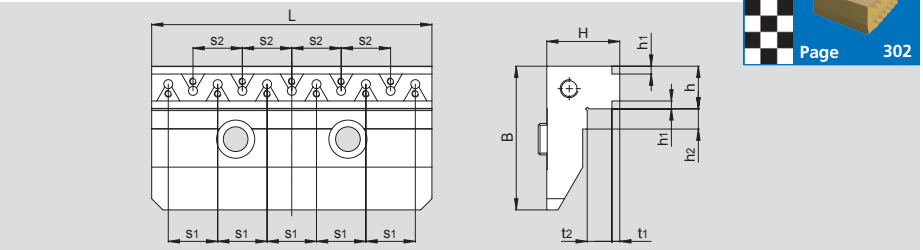

Type	Id. No.	L [mm]	B [mm]	H [mm]	s1 [mm]	s2 [mm]	h [mm]	h1 [mm]	h2 [mm]	t1 [mm]	t2 [mm]	[kg]	SinterGrip per jaw
ST5-2G 080	466188	77	41	22	21 (3x)	21 (2x)	19	3.5	8	3.5	8	0.7	4+3
ST5-2G 125	466186	124.8	59.5	32	22 (5x)	22 (4x)	19	3.5	9	3.5	10.5	2.22	6+5

Pull-down jaws

1 set = 2 pull-down jaws, incl. 4 pcs. mounting screws

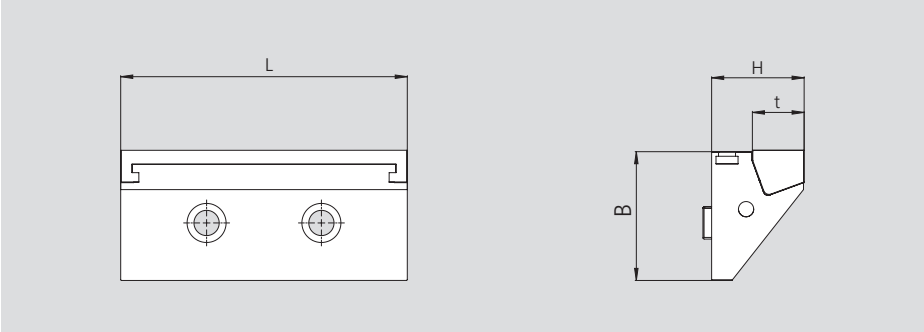

Type	Id. No.	L [mm]	B [mm]	H [mm]	t [mm]
ST5-2G 125 pull-down jaws	on request	124.8	56	40	22.5

Pendulum jaw, sealed

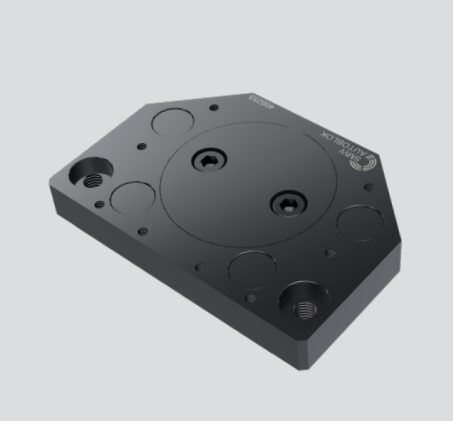

1 pendulum jaw, incl. 2 pcs. mounting screws

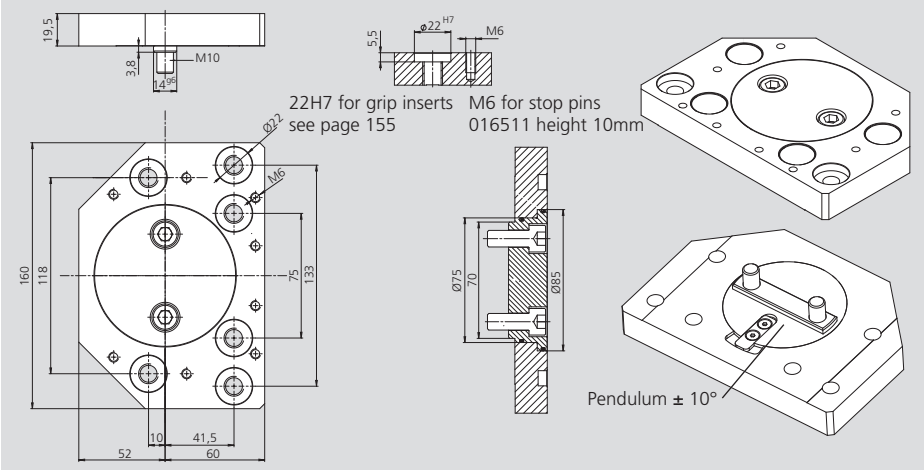

Type	Id. No.	[kg]
ST5-2G 125 Pendulum jaw	466255	2.34

Fix jaw, suitable for pendulum jaw

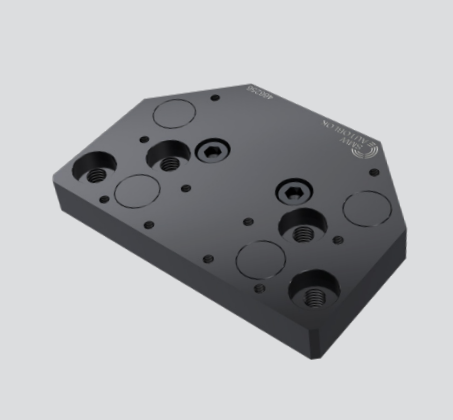

1 fix jaw , incl. 2 pcs. mounting screws

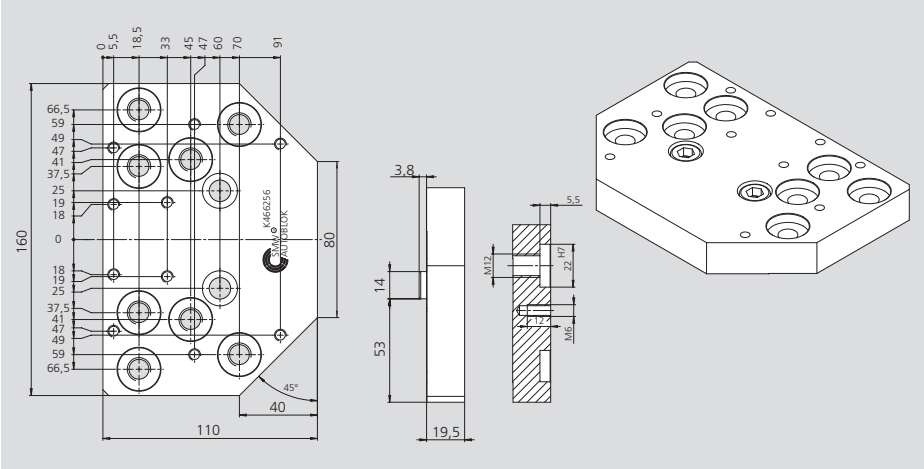

Type	Id. No.	[kg]
ST5-2G 125 Fix jaw	466256	2.22

Grip insert smooth, height 11 mm

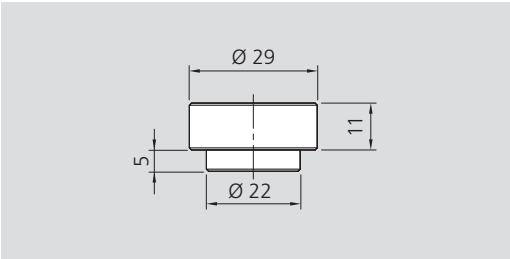

Smooth
Height 11 mm
Set consisting of 4 grippers and 4 fixing screws

Type	Id. No.
ST5-2G	58906114

Grip insert serrated, height 11 mm

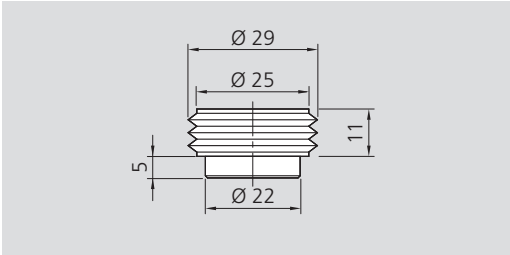

Serrated
Height 11 mm
Set consisting of 4 grippers and 4 fixing screws

Type	Id. No.
ST5-2G	58906124

Grip insert smooth, height 19 mm

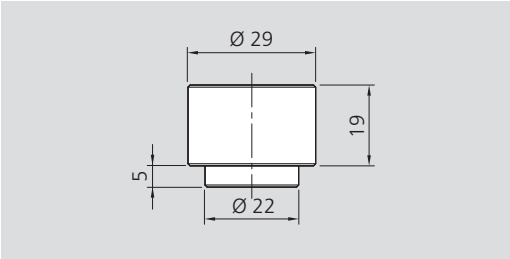

Smooth
Height 19 mm
Set consisting of 4 grippers and 4 fixing screws

Type	Id. No.
ST5-2G	58906214

Grip insert serrated, height 19 mm

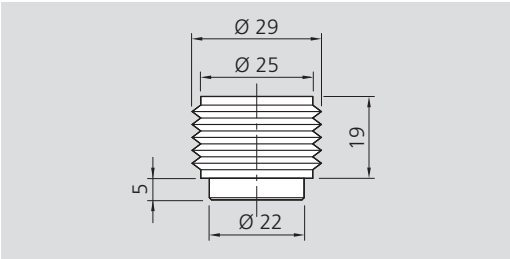

Serrated
Height 19 mm
Set consisting of 4 grippers and 4 fixing screws

Type	Id. No.
ST5-2G	58906224

Grip insert smooth, height 24 mm

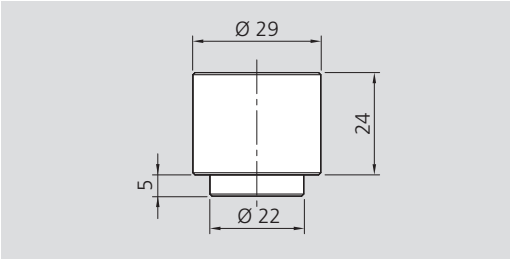

Smooth
Height 24 mm
Set consisting of 4 grippers and 4 fixing screws

Type	Id. No.
ST5-2G	58906314

Grip insert serrated, height 24 mm

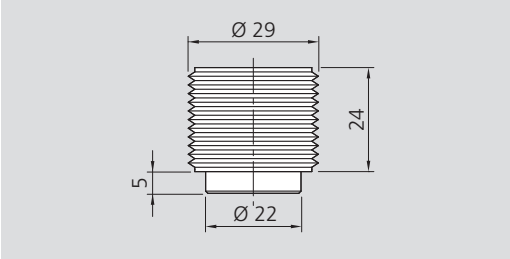

Serrated
Height 24 mm
Set consisting of 4 grippers and 4 fixing screws

Type	Id. No.
ST5-2G	58906324

Grip insert Multigrip, height 12.5 mm

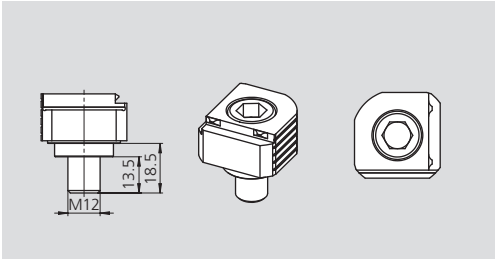

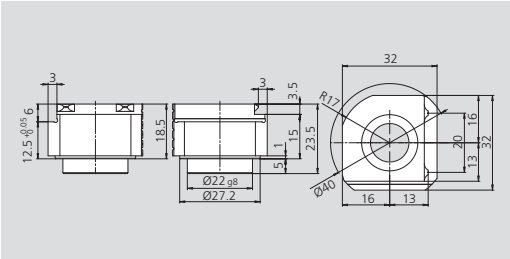

Multigrip
Height 12.5 mm
Set consisting of 1 gripper and 1 fixing screw

Type	Id. No.
ST5-2G	466228

Stop pins ALB

SMW-AUTOBLOK Type	Id.-No.	G	H [mm]	SW
ALB 605	**016513**	M6	5	10
ALB 610	**016511**	M6	10	10
ALB 615	**016512**	M6	15	10
ALB 620	**017602**	M6	20	10

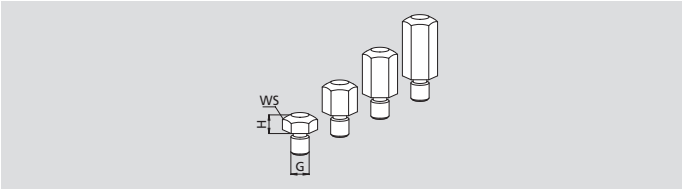

ST5-2G

5-axis self-centering vise

Application Examples

- Pull-down jaw
- Pendulum jaw

ST5-2G Pull-down jaw

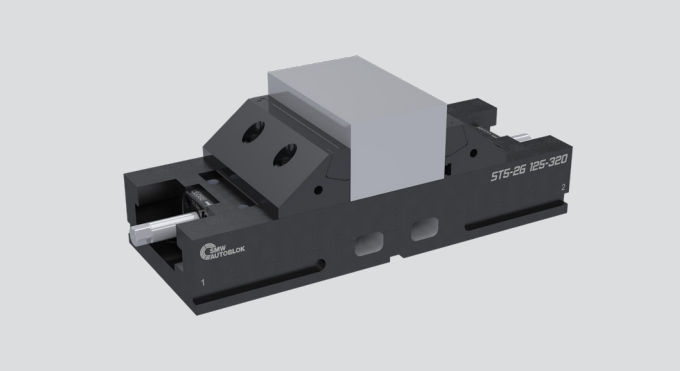

Pull-down jaws, work against the lifting of the workpiece.

ST5-2G Circular clamping with Pendulum jaw

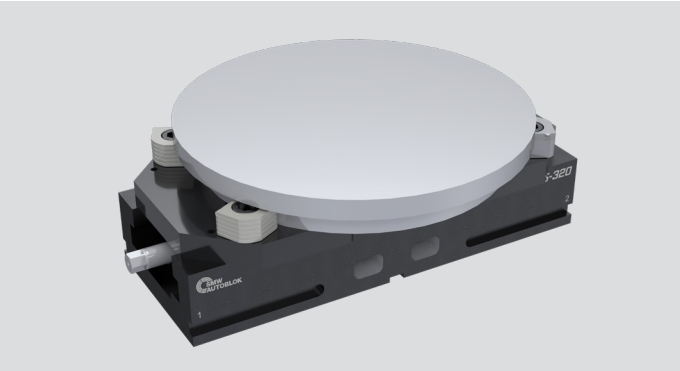

ST5-2G Angular clamping with Pendulum jaw

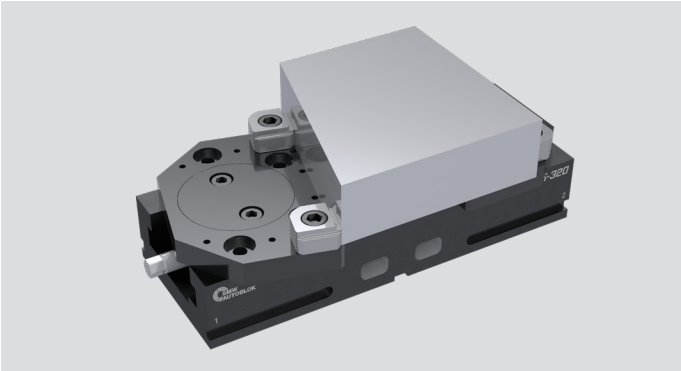

ST5-2G Small part clamping with Pendulum jaw

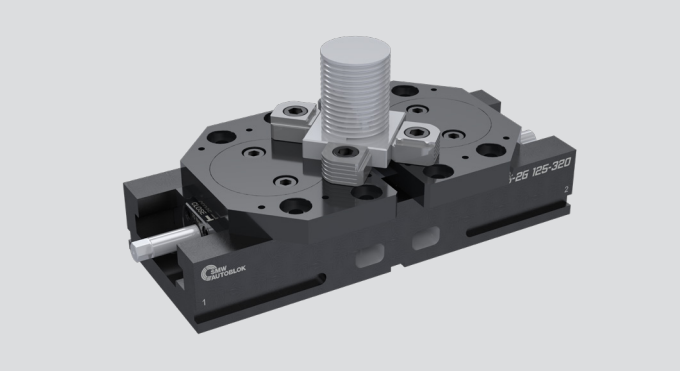

Pendulum jaws, in combination with our grip inserts, enable the clamping of irregularly shaped workpieces.

In order to ensure a regular contact of the clamping points, pendulum jaws are movable around a center of rotation.

Mounting devices for ST5-2G 080-120 (Aluminum)

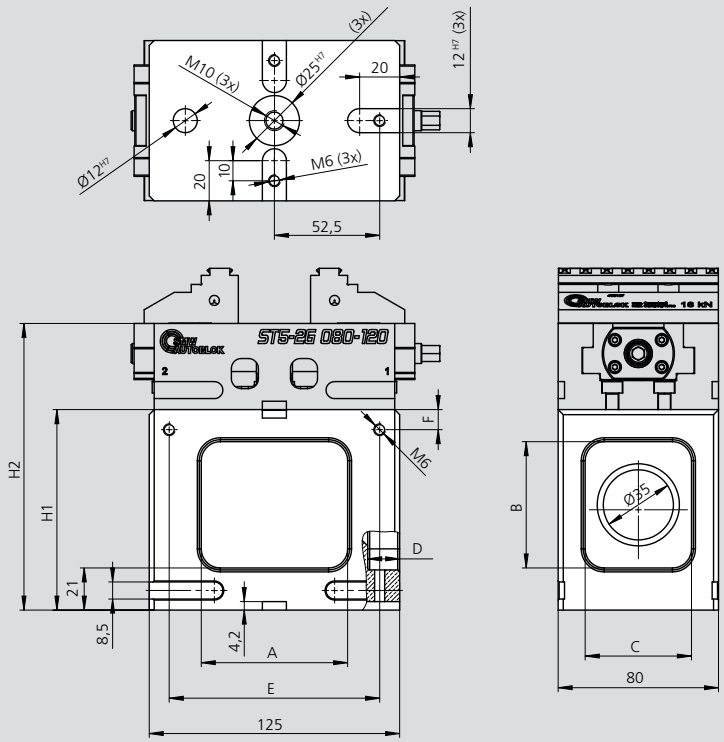

Subject to technical changes.

ST5-2G not included in scope of delivery.

Type	Id. No.	H1 [mm]	H2 [mm]	A [mm]	B [mm]	C [mm]	D [mm]	E [mm]	F [mm]
ST5-2G H60	466327	60	103	75	25	55	16	105	10
ST5-2G H100	466328	100	143	75	65	55	16	105	10

Mounting devices for ST5-2G 125-170 (Aluminum)

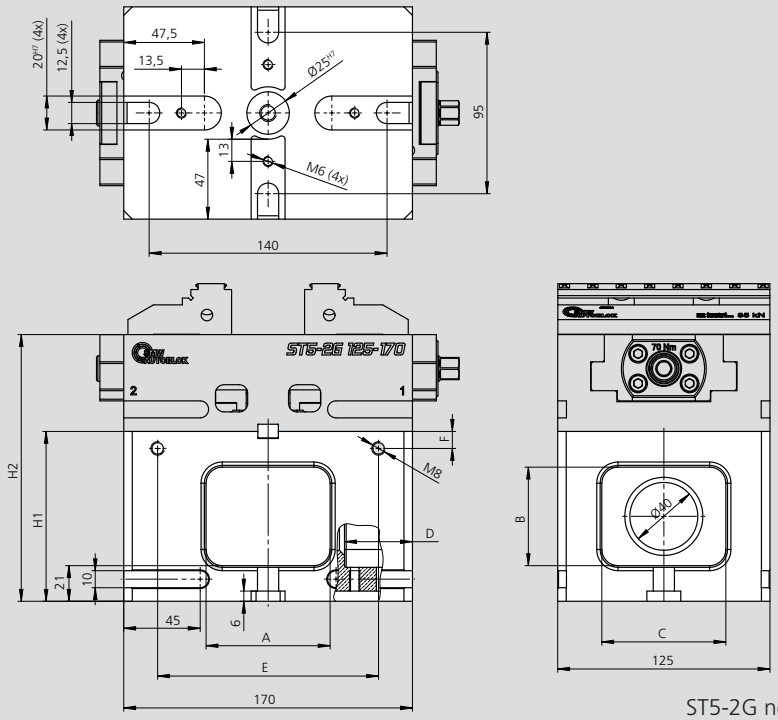

Subject to technical changes.

ST5-2G not included in scope of delivery.

Type	Id. No.	H1 [mm]	H2 [mm]	A [mm]	B [mm]	C [mm]	D [mm]	E [mm]	F [mm]
ST5-2G H60	466321	60	117	75	25	75	29	130	10
ST5-2G H100	466322	100	157	75	60	75	40	130	10
ST5-2G H120	466323	120	177	75	80	75	40	130	10

Mounting devices for ST5-2G 125-205 (Aluminum)

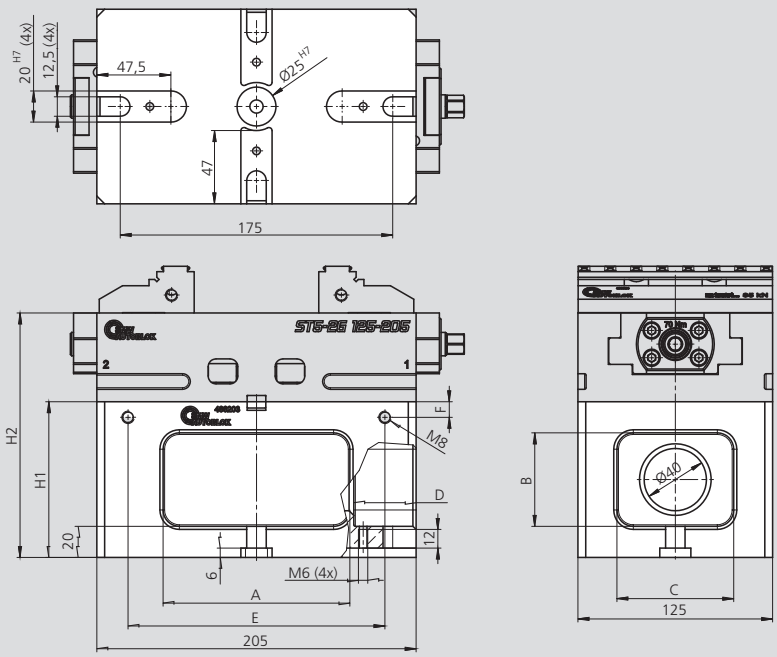

Subject to technical changes.

ST5-2G not included in scope of delivery.

Type	Id. No.	H1 [mm]	H2 [mm]	A [mm]	B [mm]	C [mm]	D [mm]	E [mm]	F [mm]
ST5-2G H60	466202	60	117	120	40	70	29 / 16	165	20
ST5-2G H100	466203	100	157	120	60	75	40	165	10
ST5-2G H120	466204	120	177	120	75	75	40	165	20

Mounting devices for ST5-2G 125-320 (Aluminum)

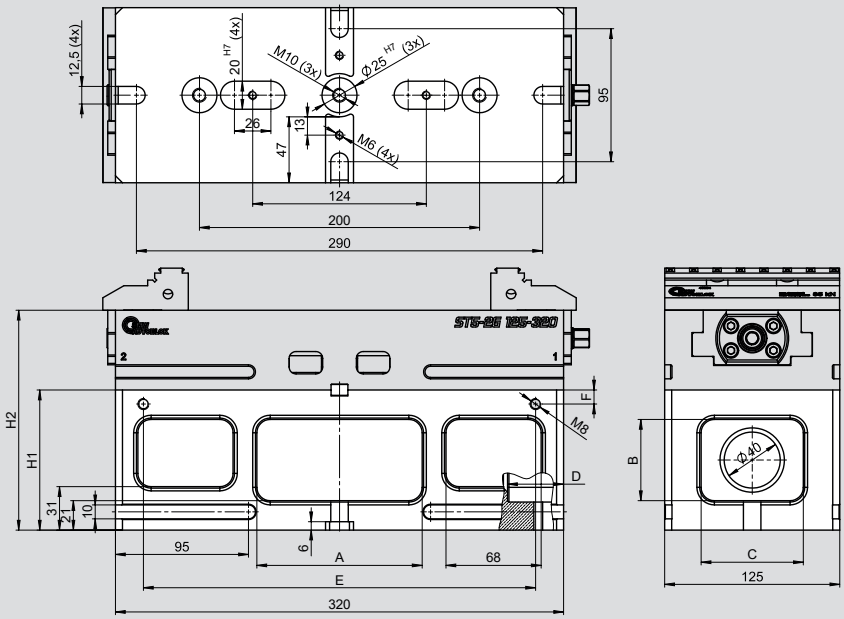

Subject to technical changes.

ST5-2G not included in scope of delivery.

Type	Id. No.	H1 [mm]	H2 [mm]	A [mm]	B [mm]	C [mm]	D [mm]	E [mm]	F [mm]
ST5-2G H60	466324	60	117	120	25	75	40	280	10
ST5-2G H100	466325	100	157	120	60	75	40	280	10
ST5-2G H120	466326	120	177	120	80	75	40	280	10

Mounting devices for ST5-2G 125-480 (Aluminum)

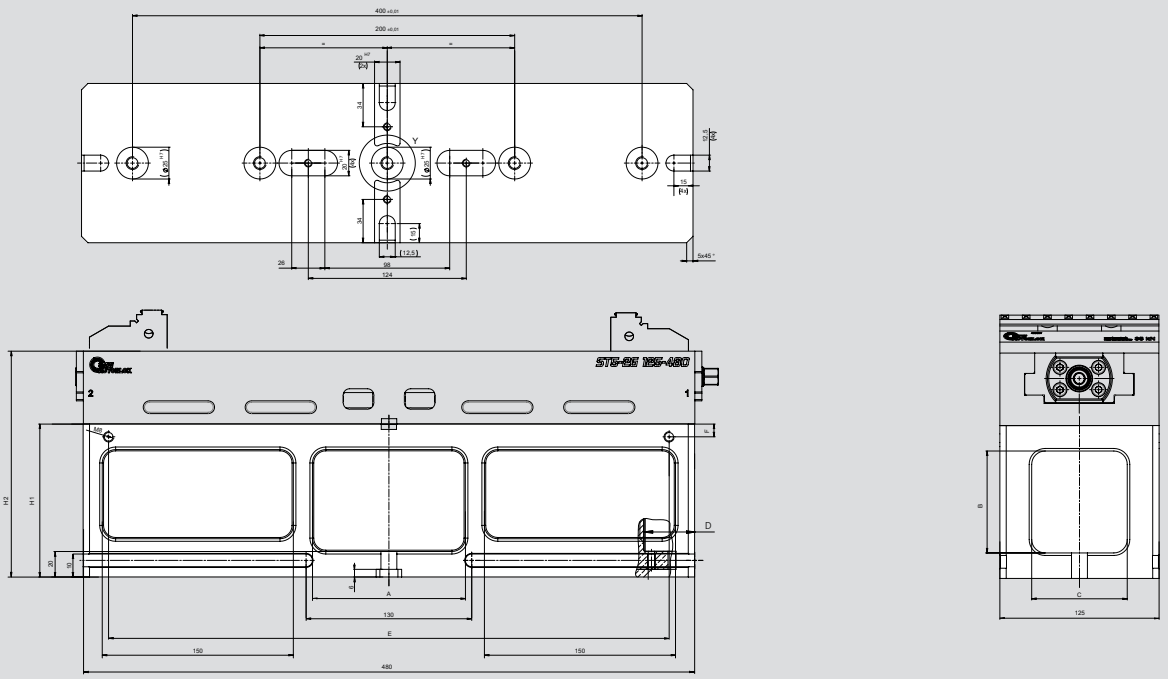

Subject to technical changes.

ST5-2G not included in scope of delivery.

Type	Id. No.	H1 [mm]	H2 [mm]	A [mm]	B [mm]	C [mm]	D [mm]	E [mm]	F [mm]
ST5-2G H60	466627	60	117	120	25	75	30	440	10
ST5-2G H100	466628	100	157	120	60	75	40	440	10
ST5-2G H120	466629	120	177	120	80	75	40	440	10

Mounting devices for ST5-2G 125-625 (Aluminum)

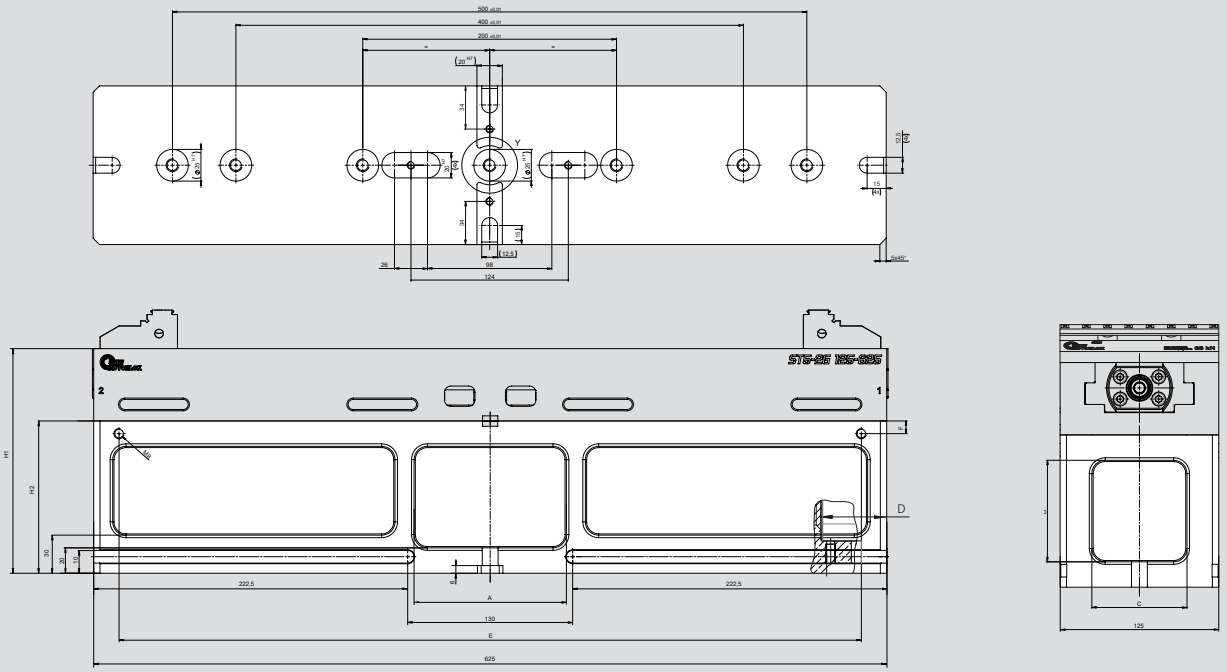

Subject to technical changes.

ST5-2G not included in scope of delivery.

Type	Id. No.	H1 [mm]	H2 [mm]	A [mm]	B [mm]	C [mm]	D [mm]	E [mm]	F [mm]
ST5-2G H60	466646	60	117	120	25	75	30	585	10
ST5-2G H100	466647	100	157	120	60	75	50	585	10
ST5-2G H120	466648	120	177	120	80	75	50	585	10

ST5-2G

5-Axis-centric clamping vise

Accessories

■ Pyramid for ST5-2G 80-120 / ST5-2G 125-170 / ST5-2G 125-205

Application/customer benefits

- Improved accessibility for 5-axis applications
- High strength aluminium alloy
- Surface anodized and highly compressed
- Increased efficiency due to multiple clamping
- Shorter cycle times due to reduction of tool changes per workpiece
- Pyramid for the application of SMW-Autoblok zero point clamping systems
- Optimized: Mounting holes for direct mounting on the machine table

Technical features

- Material: ALU

Standard equipment

- Pyramid without ST5 -2G

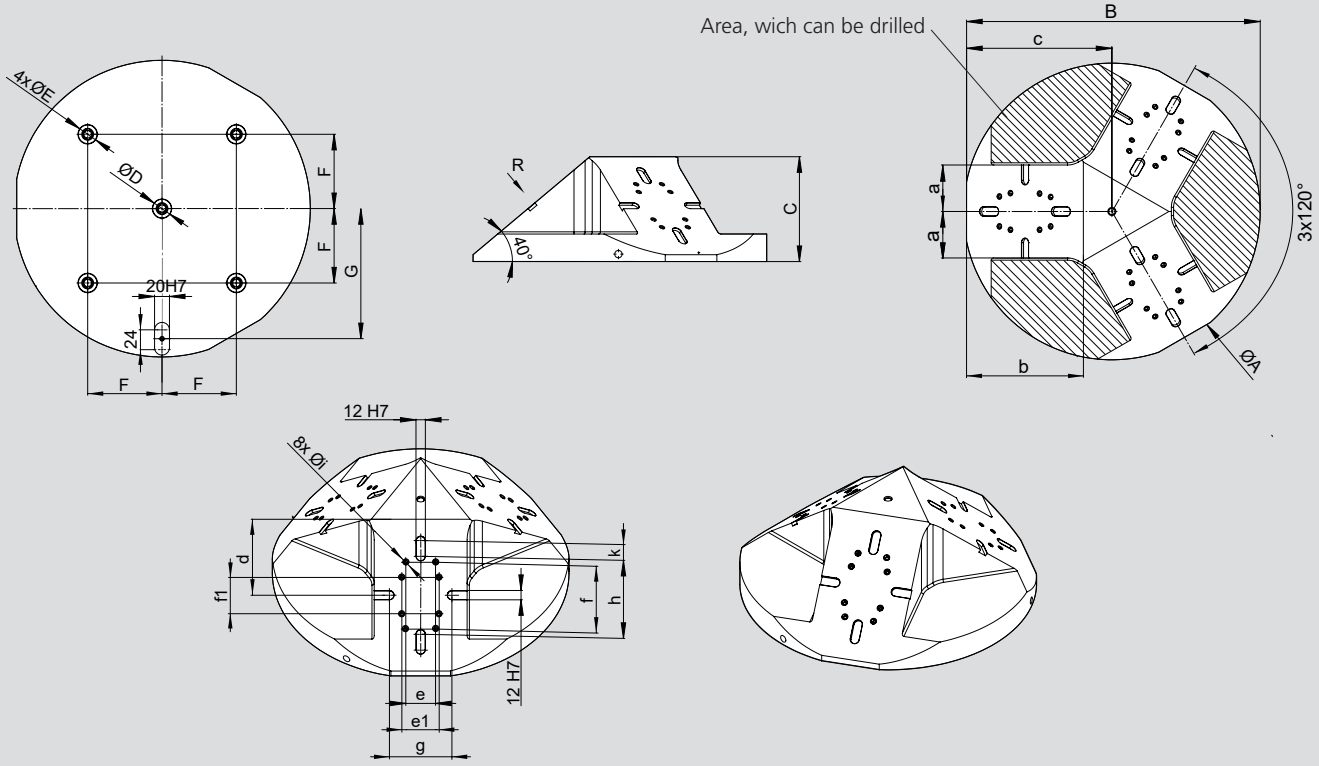

Subject to technical changes. For more detailed information please ask our customer service.

SMW-AUTOBLOK Type ST5-2G Id. No.			080-120 466634	125-205 / 125-170 466632
Outside diameter	**A**	mm	335	399
	B	mm	329,3	394,9
	C	mm	94	141
Positioning hole / depth	**D**	mm	25H7 / 5,5	25H7 / 5,5
Positioning hole / depth / center thread	**E**	mm	25H7 / 5,5 / M16 29,5	25H7 / 5,5 / M16 29,5
	F	mm	100	100
	G	mm	140	175
	a	mm	43,5	62,5
	b	mm	120	205
	c	mm	161,8	195,4
	d	mm	60	102,5
	e / e1	mm	26	40 / 50
	f / f1	mm	112	90 / 50
	g	mm	47	84
	h	mm	-	105
Thread / depth	**i**	mm	M6 / 12	M8 / 14
	k	mm	-	21
Weight (without ST5-2G)		kg	20,55	21,4

ST5-2G 080 overview configurations

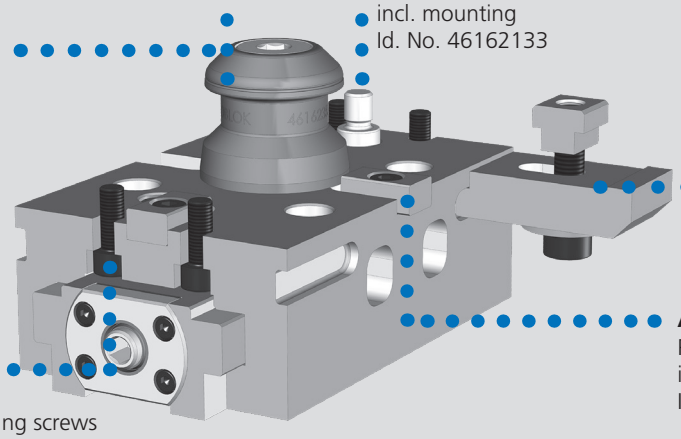

ST5-2G 125 overview configurations

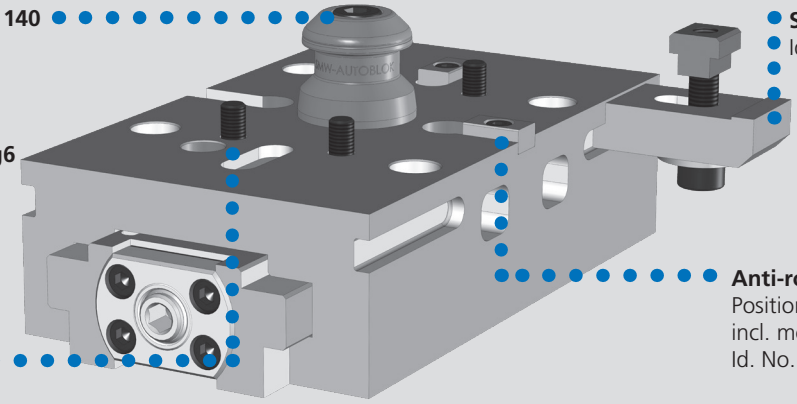

Set of clamps

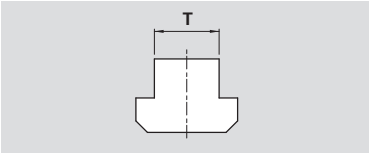

Consisting of:
1 clamp
with adjustable mounting
incl. T-nut and screw

Type	Id. No.						
T	10 mm	12 mm	14 mm	16 mm	18 mm	20 mm	22 mm
ST5-2G 080	466150	466151	466152	466153	466154	466155	-
ST5-2G 125	-	466142	466143	466144	466145	466146	466147

Pair of positioning keys (special dimensions)

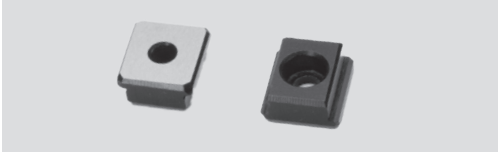

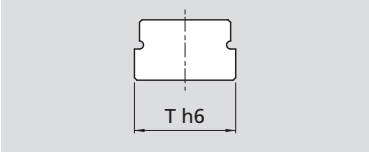

Type	Id. No.					
Th6	12 mm - h6	14 mm - h6	16 mm - h6	18 mm - h6	20 mm - h6	22 mm - h6
ST5-2G	466135	462058	462059	462060	462061	462062

IMG

Self-centering vise

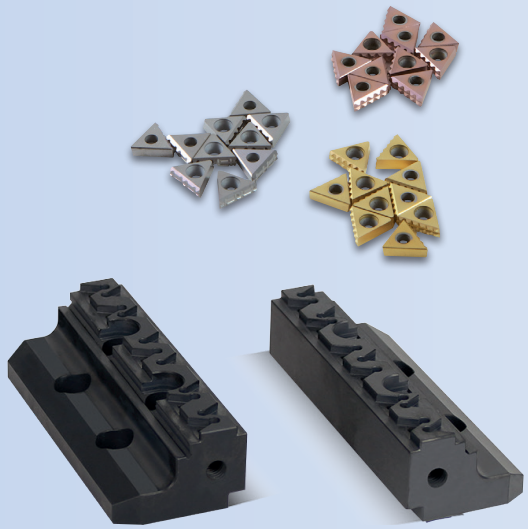

Wide clamping range
Maximum flexibility
For external and internal clamping

SinterGrip jaws:
Reversible jaws for minimum clamping depth and without pre-machining

Mechanical clamping
Totally protected with patented telescopic system.
The large power transmission allows high performance in the manufacturing process

Interface
For Zero Point clamping systems and mounting holes as standard

Find out more

▶ from SMW-AUTOBLOK

Double Clamping|Fixed

Totally protected
With patented telescopic system

Nitreg® treatment

Through holes
For frontal clamping

Ideal
For automation and palletizing systems

Flexible mounting
on machine tool pallet using clamps (optional)

Double clamping jaw (for double clamping)

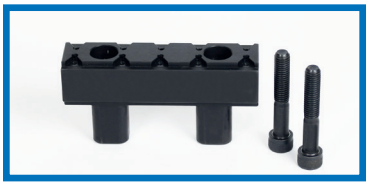

Retainer plate (for fixed clamping)

Very large drainage slots
for coolant and chips

Treated and precision ground guides
for maximum accuracy and repeatability

Parallels
with quick change Clak System

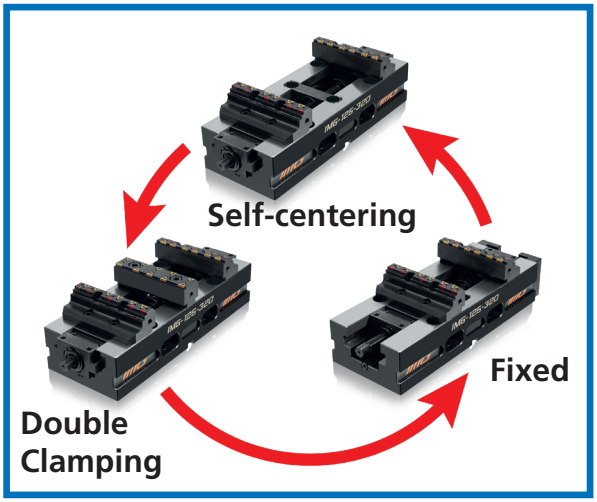

IMG

Self-centering vise | Double Clamping | Fixed

■ Patented protected screw

Applications / Customer Benefits

- Highly precise self-centering clamping with maximum repeatability
- Totally protected
- Compact design for better accessibility and very large drainage slots
- Jaws with SinterGrip clamping inserts for minimum workpiece clamping depth without pre-machining
- Type **IMG BASIC** with jaws without SinterGrip inserts
  Werkzeugwechsel pro Werkstück
- Wide clamping range
- Ideal for OP 10 and OP 20

Technical features

- Self-centering clamping
- Clamping force up to 32 kN (50 Nm)
- Jaw width 87,5 mm
- Interface for zero point systems APS / WPS and Lang 52 - 96 mm as standard

Standard equipment

Wrench, jaws, Sintergrip inserts

Modular system

The IMG self-centering vises can be easily transformed into fixed vises or double clamping vises.

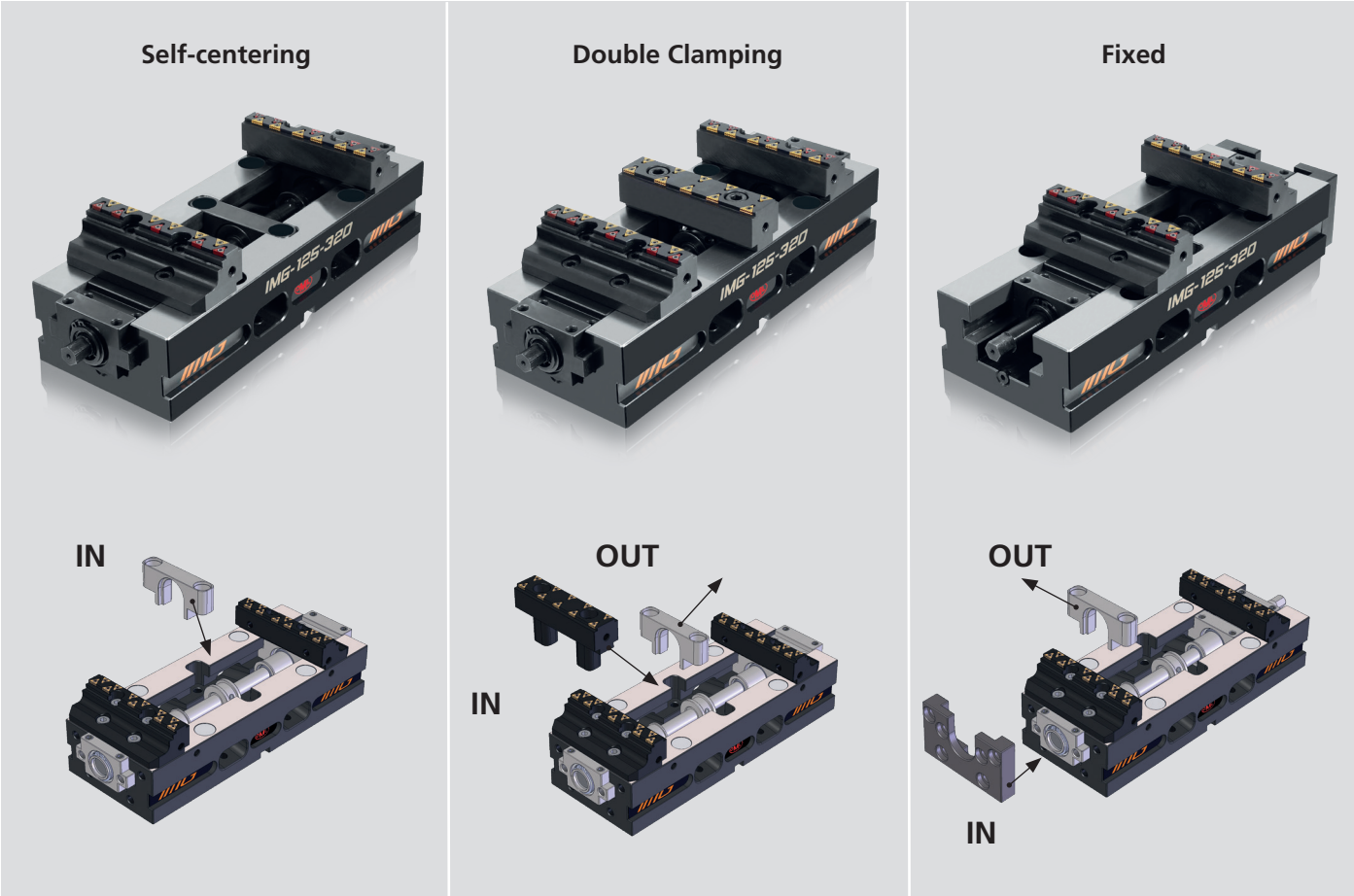

IMG 88

■ Patented protected screw

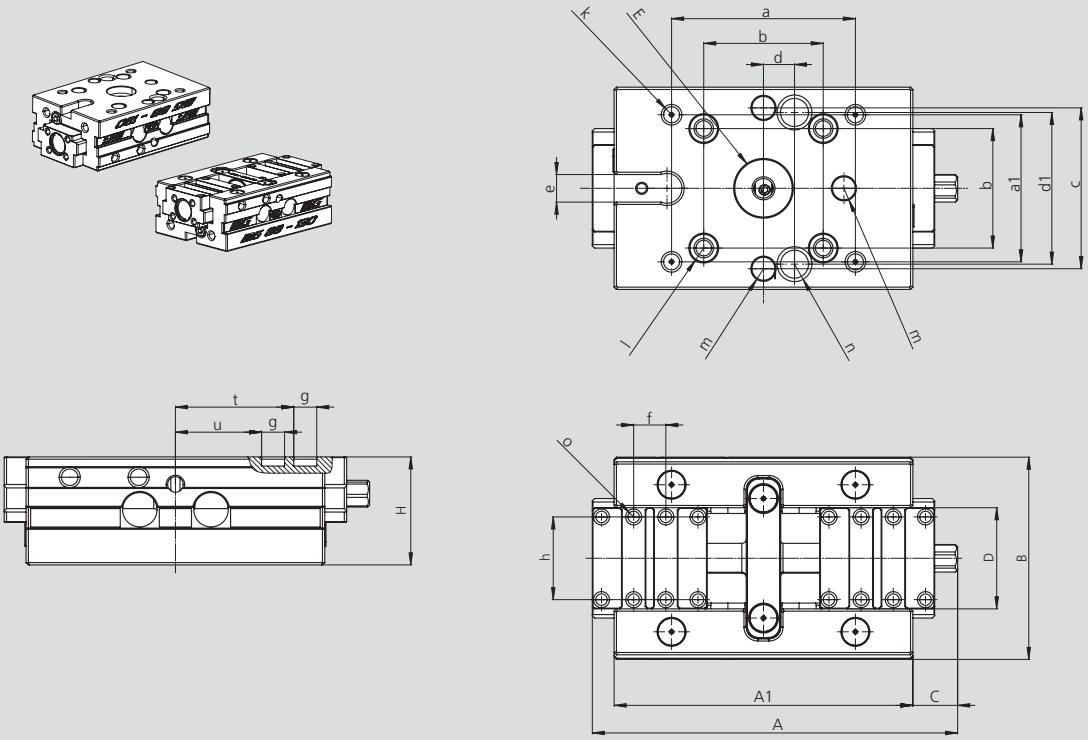

Subject to technical changes. For more detailed information please ask our customer service.

SMW-AUTOBLOK Type IMG 88 Id. No.			88-130 77583401
Overall length	**A**	mm	159
Base length	**A1**	mm	130
Width	**B**	mm	88
	C	mm	19.5
Base jaw width	**D**	mm	44
Fitting / depth / center thread	**E**	mm	25 H7 / 6.4 / M10
	H	mm	47
	a	mm	80
	a1	mm	64
	b	mm	52
	c	mm	70
	d	mm	13.5
	d1	mm	66
Slot width	**e**	mm	12 H7
	f	mm	14
	g	mm	10
	h	mm	36
	k	mm	7
	l	mm	12 H7
	m	mm	10 H7
	n	mm	12.2
Thread	**o**	mm	M6
Max. / min.	**t**	mm	51.5 / 35
Max. / min.	**u**	mm	37.5 / 21
Max. Clamping force of all clamping points		kN	32
At max. torque (Md) / hexagonal		Nm	50 / 11
Stroke per jaw		mm	16.5
Weight (without jaws)		kg	3.5

IMG 125

Self-centering vise | Double Clamping | Fixed

■ Patented protected screw

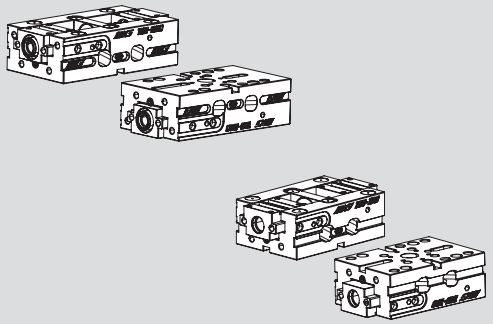

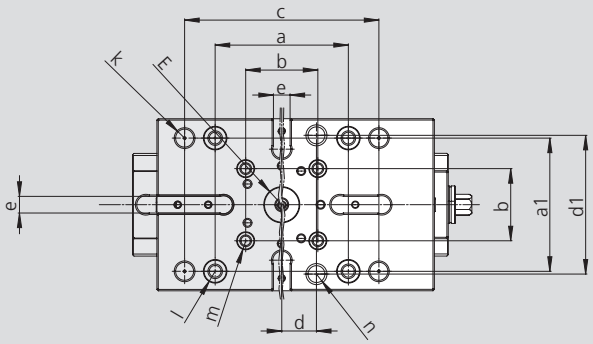

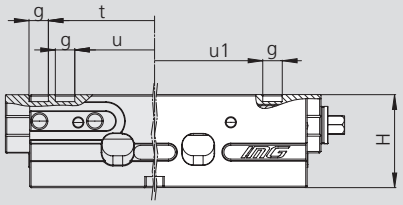

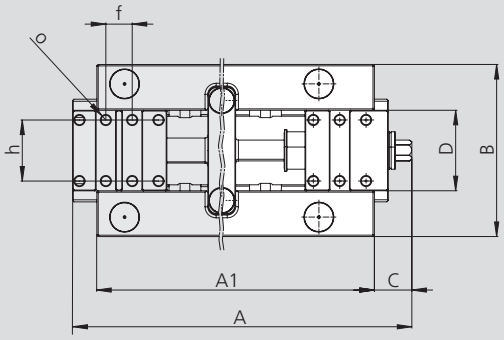

Subject to technical changes. For more detailed information please ask our customer service.

SMW-AUTOBLOK Type IMG 125 Id. No.			125-180 77583503	125-220 77583501
Overall length	**A**	mm	225	260
Base length	**A1**	mm	180	220
Width	**B**	mm	124	124
	C	mm	27.5	27
Base jaw width	**D**	mm	58	58
Fitting / depth / center thread	**E**	mm	25 H7 / 6.4 / M10	25 H7 / 6.4 / M10
	H	mm	67	67
	a	mm	96	96
	a1	mm	96	96
	b	mm	52	52
	c	mm	140	140
	d	mm	25	25
	d1	mm	100	100
Slot width	**e**	mm	12 H7	12 H7
	f	mm	19	19
	g	mm	14	14
	h	mm	44	44
	k	mm	13	13
	l	mm	16 H7	16 H7
Slot width	**m**	mm	12 H7	12 H7
	n	mm	12.2	12.2
Thread	**o**	mm	M8	M8
Max. / min.	**t**	mm	76.5 / 47	-
Max. / min.	**u**	mm	57.5 / 28	-
Max. / min.	**u1**	mm	-	78 / 28.5
Max. Clamping force of all clamping points		kN	40	40
At max. torque (Md) / hexagonal		Nm	80 / 13	80 / 13
Stroke per jaw		mm	29.5	49.5
Weight (without jaws)		kg	10	13

Self-centering vise | Double Clamping | Fixed

IMG 125

■ Patented protected screw

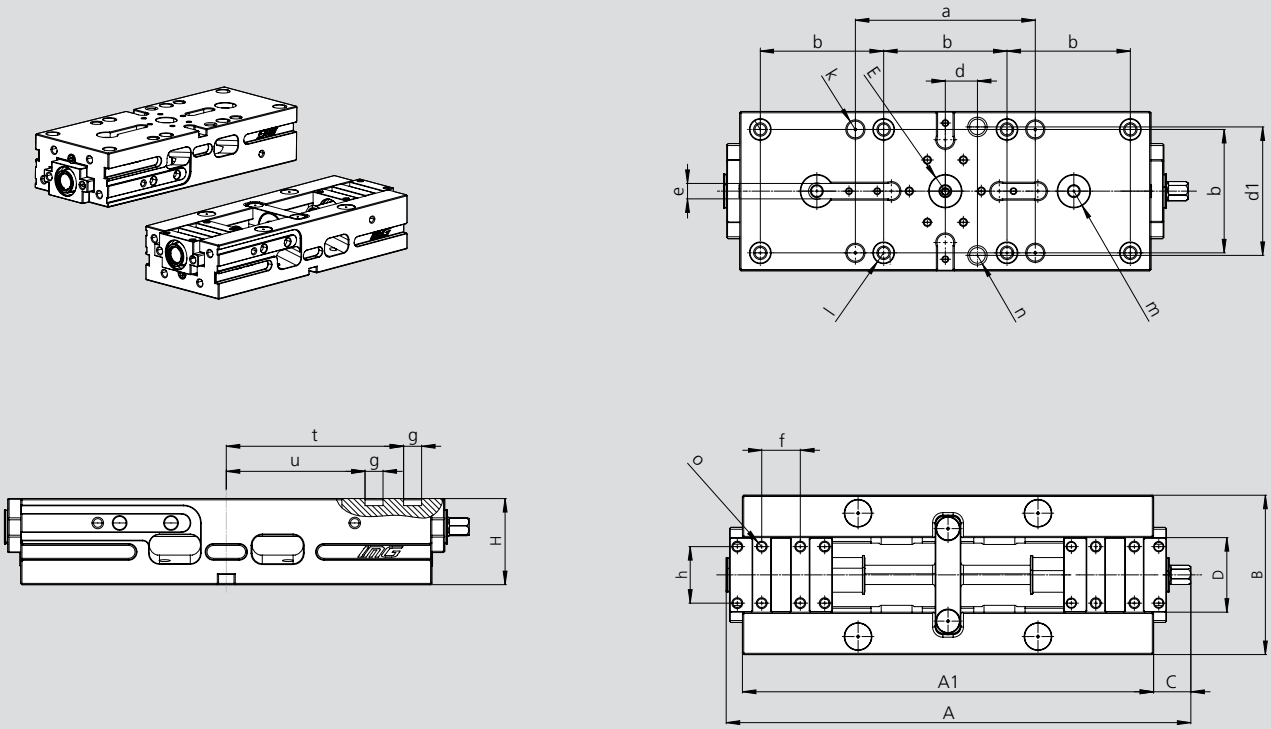

Subject to technical changes. For more detailed information please ask our customer service.

SMW-AUTOBLOK Type IMG 125 Id. No.			125-320 77583502
Overall length	**A**	mm	359
Base length	**A1**	mm	320
Width	**B**	mm	124
	C	mm	29
Base jaw width	**D**	mm	58
Fitting / depth / center thread	**E**	mm	25H7 / 6.4 / M10
	H	mm	67
	a	mm	140
	a1	mm	-
	b	mm	96
	c	mm	-
	d	mm	25
	d1	mm	100
Slot width	**e**	mm	12 H7
	f	mm	30
	g	mm	14
	h	mm	44
	k	mm	13
	l	mm	16 H7
	m	mm	25 H7
	n	mm	12.2
Thread	**o**	mm	M8
Max. / min.	**t**	mm	137.5 / 58
Max. / min.	**u**	mm	107.5 / 28
Max. Clamping force of all clamping points		kN	40
At max. torque (Md) / hexagonal		Nm	80 / 13
Stroke per jaw		mm	79.5
Weight (without jaws)		kg	18

IMG 88 / 125

Self-centering vise | Double Clamping | Fixed

■ Ordering review

Type	Id. No.	Weight
IMG 88 - 130 with SinterGrip jaws **STD**	77583411	4,5 Kg
IMG 88 - 130 with SinterGrip jaws **ALU**	77583412	4,5 Kg
IMG 88 - 130 with SinterGrip jaws **HRC**	77583413	4,5 Kg
IMG 88 - 130 **Basic**	77583414	4,5 Kg
IMG 88 - 130 body only	77583401	3,5 Kg

Type	Id. No.	Weight
IMG 125 - 180 with SinterGrip jaws **STD**	77583531	12 Kg
IMG 125 - 180 with SinterGrip jaws **ALU**	77583532	12 Kg
IMG 125 - 180 with SinterGrip jaws **HRC**	77583533	12 Kg
IMG 125 - 180 **Basic**	77583534	12 Kg
IMG 125 - 180 body only	77583503	10 Kg

Type	Id. No.	Weight
IMG 125 - 220 with SinterGrip jaws **STD**	77583511	15 Kg
IMG 125 - 220 with SinterGrip jaws **ALU**	77583512	15 Kg
IMG 125 - 220 with SinterGrip jaws **HRC**	77583513	15 Kg
IMG 125 - 220 **Basic**	77583514	15 Kg
IMG 125 - 220 body only	77583501	13 Kg

Type	Id. No.	Weight
IMG 125 - 320 with SinterGrip jaws **STD**	77583521	20 Kg
IMG 125 - 320 with SinterGrip jaws **ALU**	77583522	20 Kg
IMG 125 - 320 with SinterGrip jaws **HRC**	77583523	20 Kg
IMG 125 - 320 **Basic**	77583524	20 Kg
IMG 125 - 320 body only	77583502	18 Kg

Clamping range: Self-centering and fixed

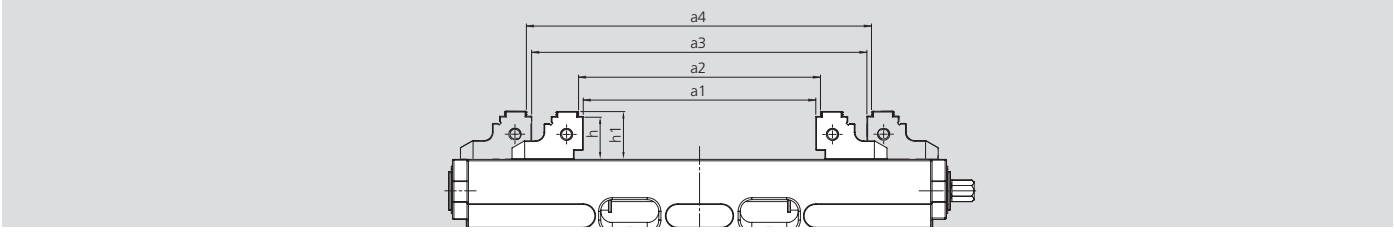

Type		088-130	125-180	125-220	125-320
Swing diameter	a	170	236	275	379
Inner position	a1	0-33	0-59	0-99	0-159
Inner position	a2	7-40	6.5-65.5	7-105	7-165
Outer position	a3	28-61	38-97	-	-
Outer position	a4	35-68	44.5-103	-	-
Support height	h	25	30	30	30
Jaw height	h1	28	33.5	33.5	33.5

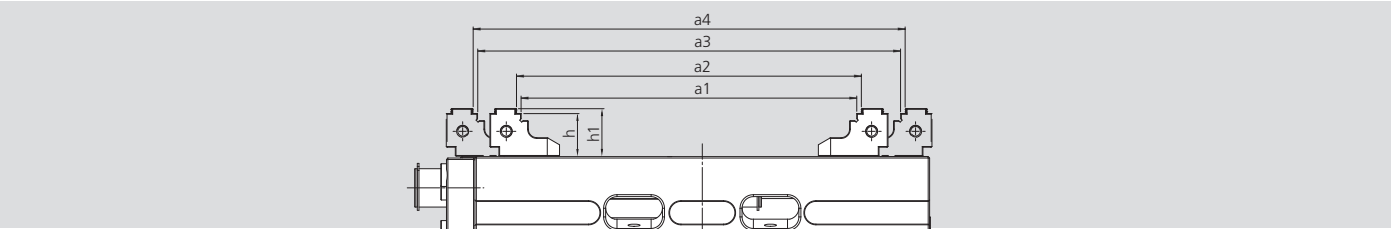

Type		088-130	125-180	125-220	125-320
Swing diameter	a	170	236	275	379
Inner position	a1	60-93	96-155	97-195	157-315
Inner position	a2	67-100	102.5-161.5	103-201	164-322
Outer position	a3	88-121	134-193	-	-
Outer position	a4	95-128	140.5-199	-	-
Support height	h	25	30	30	30
Jaw height	h1	28	33.5	33.5	33.5

Clamping range: Double Clamping

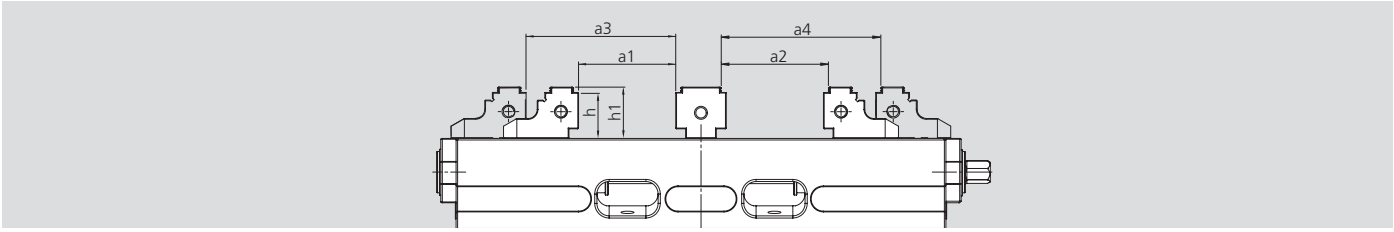

Type		088-130	125-180	125-220	125-320
Swing diameter	a	170	236	275	379
Inner position	a1	0-2.5	0-13	0-33	0-63
Inner position	a2	7-9.5	6.5-19.5	7-39	7-69
Outer position	a3	0-16.5	3-32	-	-
Outer position	a4	7-23.5	9.5-38.5	-	-
Support height	h	25	30	30	30
Jaw height	h1	28	33.5	33.5	33.5

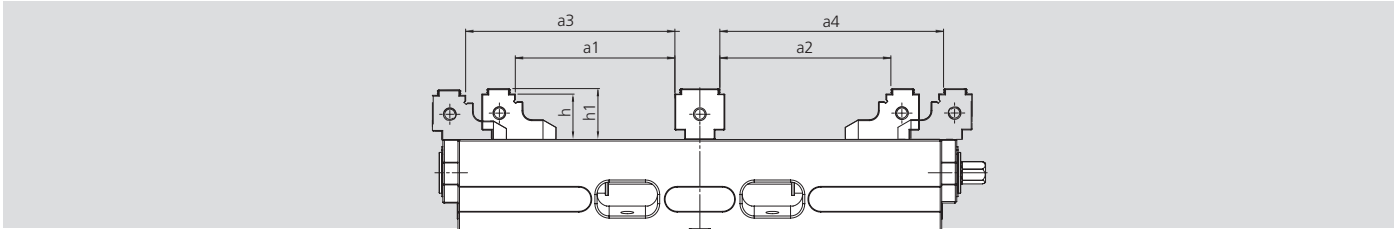

Type		088-130	125-180	125-220	125-320
Swing diameter	a	170	236	275	379
Inner position	a1	16-32.5	32-61	32-81	62-141
Inner position	a2	23-39.5	38.5-67.5	38-87	68.5-147
Outer position	a3	30-46.5	51-80	-	-
Outer position	a4	37-53.5	57.5-86.5	-	-
Support height	h	25	30	30	30
Jaw height	h1	28	33.5	33.5	33.5

IMG 160

Self-centering vise | Double Clamping | Fixed

■ Patented protected screw

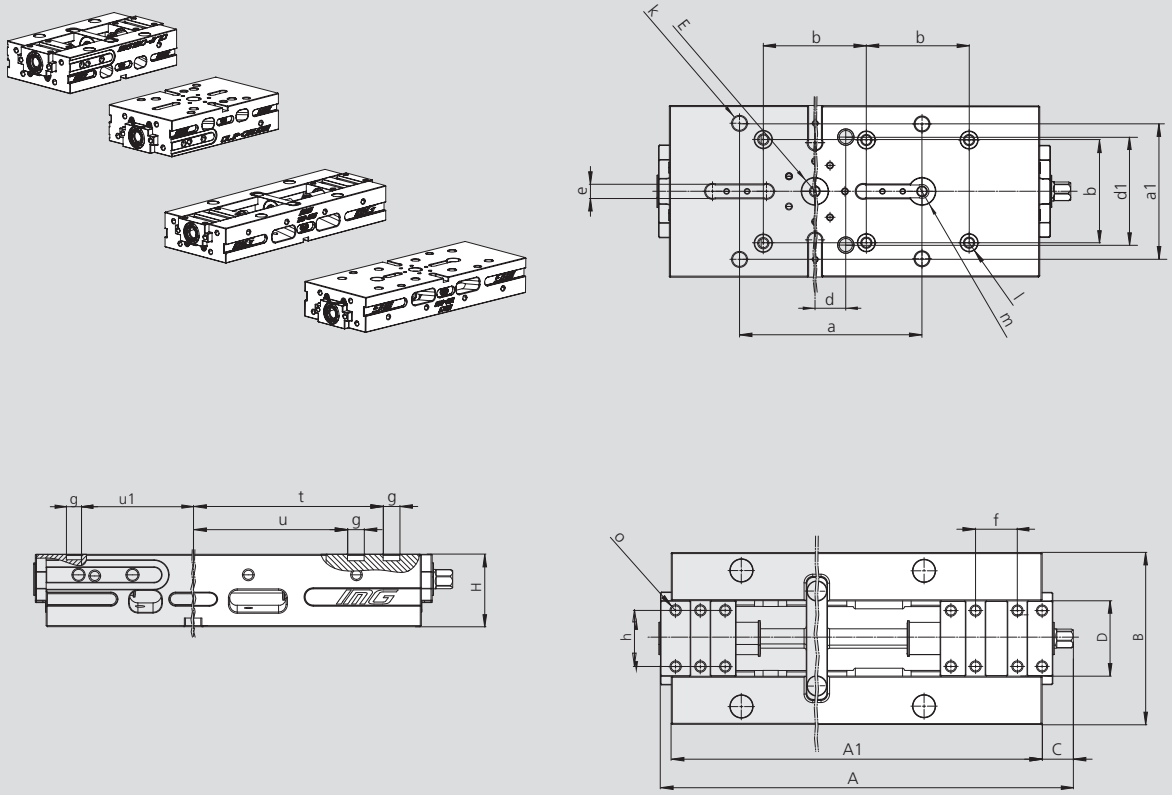

Subject to technical changes. For more detailed information please ask our customer service.

SMW-AUTOBLOK Type IMG 125 Id. No.			160-270 77583601	160-420 77583602
Overall length	**A**	mm	309	459
Base length	**A1**	mm	270	420
Width	**B**	mm	159	160
	C	mm	29	29
Base jaw width	**D**	mm	70	70
Fitting / depth / center thread	**E**	mm	25 H7 / 6.4 / M10	25 H7 / 6.4 / M10
	H	mm	67	67
	a	mm	140	200
	a1	mm	126	126
	b	mm	96	96
	c	mm	-	-
	d	mm	25	-
	d1	mm	100	-
Slot width	**e**	mm	12 H7	12 H7
	f	mm	-	39
	g	mm	18	18
	h	mm	52	52
	k	mm	13	13
	l	mm	16 H7	16 H7
	m	mm	-	25 H7
	n	mm	-	-
Thread	**o**	mm	M8	M8
Max. / min.	**t**	mm	-	177.5 / 73
Max. / min.	**u**	mm	-	139 / 34.5
Max. / min.	**u1**	mm	99 / 34.5	-
Max. Clamping force of all clamping points		kN	50	50
At max. torque (Md) / hexagonal		Nm	100 / 13	100 / 13
Stroke per jaw		mm	64.5	104.5
Weight (without jaws)		kg	17	27

Self-centering vise | Double Clamping | Fixed

IMG 160

- Ordering review
- Clamping range

Type	Id. No.	Weight
IMG 160 - 270 with SinterGrip jaws **STD**	77583611	22 Kg
IMG 160 - 270 with SinterGrip jaws **ALU**	77583612	22 Kg
IMG 160 - 270 with SinterGrip jaws **HRC**	77583613	22 Kg
IMG 160 - 270 **Basic**	77583614	22 Kg
IMG 160 - 270 body only	77583601	17 Kg

Type	Id. No.	Weight
IMG 160 - 420 with SinterGrip jaws **STD**	77583621	32 Kg
IMG 160 - 420 with SinterGrip jaws **ALU**	77583622	32 Kg
IMG 160 - 420 with SinterGrip jaws **HRC**	77583623	32 Kg
IMG 160 - 420 **Basic**	77583624	32 Kg
IMG 160 - 420 body only	77583602	27 Kg

1

Clamping range: Self-centering and fixed

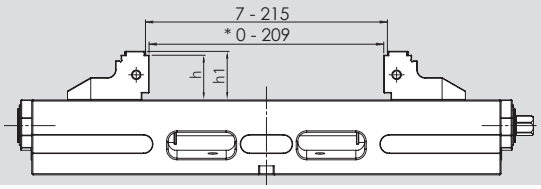

Type		160-270	160-420
Swing diameter	a	329	479
Inner position	a1	0-129	0-209
Inner position	a2	7-135	7-215
Support height	h	40	40
Jaw height	h1	43.5	43.5

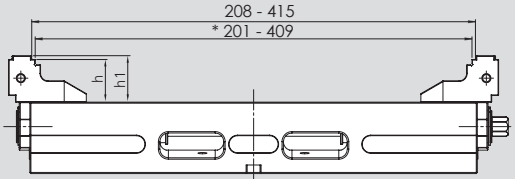

Type		160-270	160-420
Swing diameter	a	329	479
Inner position	a1	125-251	201-409
Inner position	a2	130-257	208-415
Support height	h	40	40
Jaw height	h1	43.5	43.5

Clamping range: Double Clamping

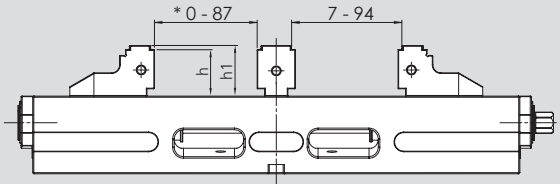

Type		160-270	160-420
Swing diameter	a	329	479
Inner position	a1	0-48	0-87
Inner position	a2	7-54	7-94
Support height	h	40	40
Jaw height	h1	43.5	43.5

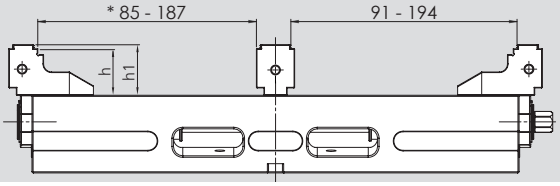

Type		160-270	160-420
Swing diameter	a	329	479
Inner position	a1	48-108	85-187
Inner position	a2	54-115	91-194
Support height	h	40	40
Jaw height	h1	43.5	43.5

Pair of BASIC jaws

Type	Id. No.
IMG 88	58341259
IMG 125	58351259
IMG 160	58361259

Pair of smooth jaws

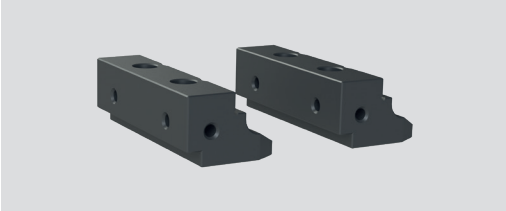

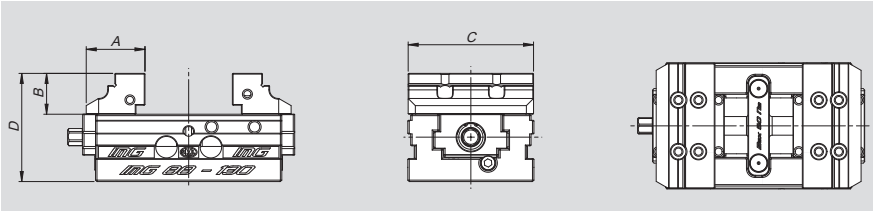

Type	Id. No.	A	B	C	D
IMG 88	58341819	41	28,5	87,5	75,5
IMG 125	58351819	49	33,5	123,5	100,5
IMG 160	58361819	73	43,5	158,5	110,5

Pair of SINTERGRIP jaws

Type	Id. No.
IMG 88	58341219
IMG 125	58351219
IMG 160	58361219

Pair of soft jaws (soft steel – aluminum)

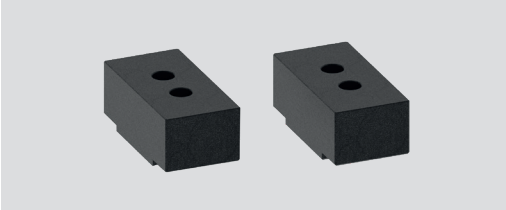

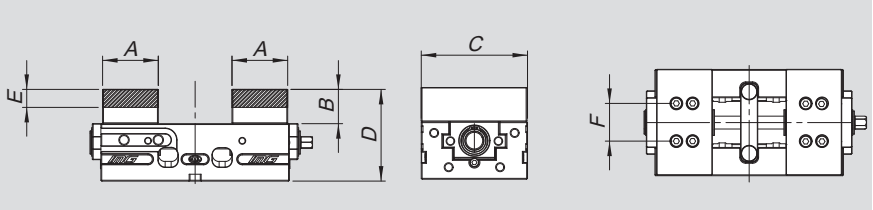

Type		Id. No.	A	B	C	D	E	F
IMG 88	ALU	58341619	45	40	87.5	87	23	36
IMG 88	Fe	58341629	45	40	87.5	87	23	36
IMG 125	ALU	58351619	65	40	123,5	107	20	44
IMG 125	Fe	58351629	65	40	123,5	107	20	44
IMG 160	ALU	58361619	85	50	158.5	117	25	52
IMG 160	Fe	58361629	85	50	158.5	117	25	52

Pair of reduced jaws - SinterGrip not included

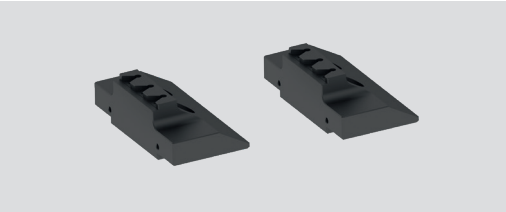

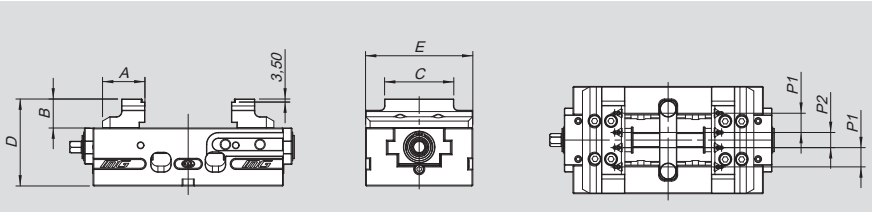

Type	Id. No.	A	B	C	D	E	p1	p2	min.	max.	
IMG 88 - 130	58341519	35	38,5	48	85,5	87,5	--	18	0 - 7	61 - 67,5	2
IMG 125 - 180	58351519	49	43,5	74	110,5	123,5	21,5	18	0 - 7	59 - 65,5	4
IMG 125 - 220	58351519	49	43,5	74	110,5	123,5	21,5	18	0 - 7	99 - 105	4
IMG 125 - 320	58351519	49	43,5	74	110,5	123,5	21,5	18	0 - 7	159 - 165	4
IMG 160 - 270	58361519	73	53,5	82	120,5	158,5	17	17	0 - 7	129 - 135	5
IMG 160 - 420	58361519	73	53,5	82	120,5	158,5	17	17	0 - 7	209 - 215	5

Double clamping jaws

* SinterGrip not included

Type	Id. No.
IMG 88	58341759
IMG 125	58351759
IMG 160	58361719

Type	Id. No.
IMG 88	58341739
IMG 125	58351739
IMG 160	58361739

Type	Id. No.
IMG 88	58341719
IMG 125	58351719
IMG 160	58361719

Reduced double clamping jaw (SinterGrip not included, to be specified when ordering)

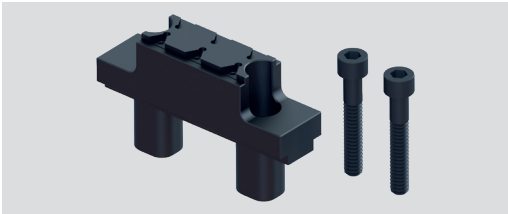

Type	Id. No.
IMG 88	58341729
IMG 125	58351729
IMG 160	58361729

OP10 - OP20 Kit double clamping

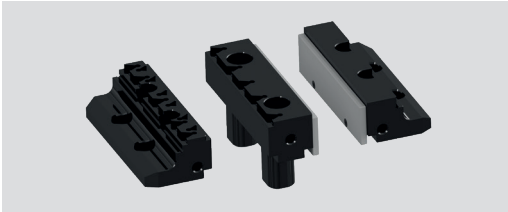

Type	Id. No.
IMG 88	58349719
IMG 125	58359719
IMG 160	58369719

Set of soft jaws for double clamping

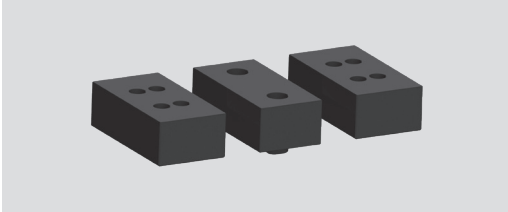

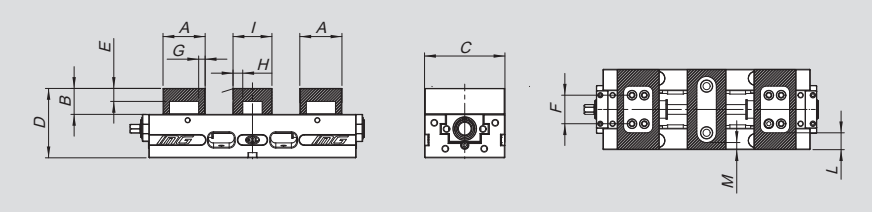

Type		Id. No.	A	B	C	D	E	F	G	H	I	L	M
IMG 125	ALU	58359519	65	40	123,5	107	20	44	10	15	60	25	11
IMG 125	Fe	58359619	65	40	123,5	107	20	44	10	15	60	25	11
IMG 160	ALU	58369519	85	50	158.5	117	25	52	16.5	15	60	35	28
IMG 160	Fe	58369619	85	50	158.5	117	25	52	16.5	15	60	35	28

Pull down jaws dimensions

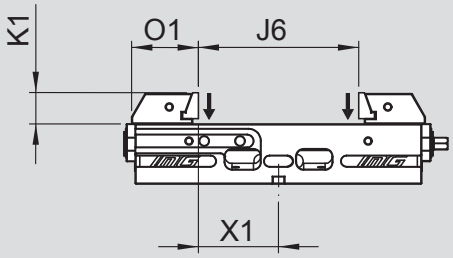

Type	K1	O1	X1	J6
IMG 125-220	35	74,4	59,5	119
IMG 125-320	35	74,4	119,5	239
IMG 160-270	45	91,5	76	152
IMG 160-420	45	91,5	155	310

Pair of supports with pull down jaws

Type	Id. No.	Weight (Kg)
IMG 125	58351419	4,100
IMG 160	58361419	8,300

Pair of pull down jaws

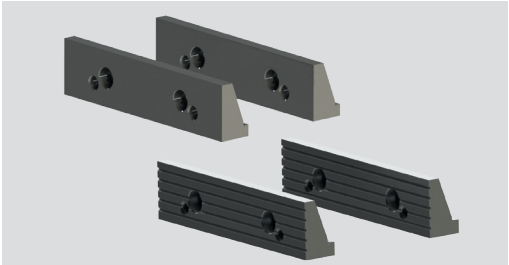

Type - smooth jaws	Id. No.	Weight (Kg)
IMG 125	58351415	0,600
IMG 160	58361415	1,450

Type - grooved jaws	Id. No.	Weight (Kg)
IMG 125	58351425	0,600
IMG 160	58361425	1,400

Retainer plate

Type	Id. No.
IMG 88	58341019
IMG 125	58351019
IMG 160	58361019

Quick change modular parallels

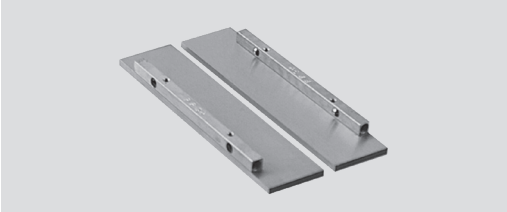

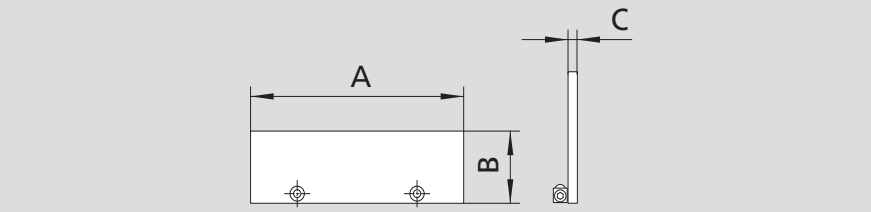

Type	Id. No.	B	A	C
IMG 88	58343510	10	87	4
IMG 88	58343515	15	87	4
IMG 88	58343520	20	87	4
IMG 88	58343525	25	87	4
Type	**Id. No.**	**B**	**A**	**C**
IMG 125	58455115	15	124	4
IMG 125	58455120	20	124	4
IMG 125	58455125	25	124	4
IMG 125	58455130	30	124	4
Type	**Id. No.**	**B**	**A**	**C**
IMG 160	58455315	15	159	4
IMG 160	58455325	25	159	4
IMG 160	58455335	35	159	4
IMG 160	58455340	40	159	4

Pair of positioning keys for T Slot

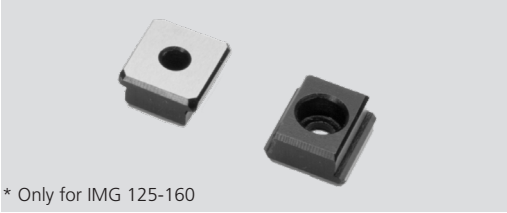

* Only for IMG 125-160

IMG 125 - 160	mm 12 - h6
mm 12 - h6	58351392
mm 14 - h6	58351393
mm 16 - h6	58351394
mm 18 - h6	58351395
mm 20 - h6	58351396
mm 22 - h6	58351397

Pair of Clamps

Type	mm 12	mm 14	mm 16	mm 18	mm 20	mm 22
IMG 88	58012792	58012793	58012794	58012795	58012796	58012797
IMG 125 / 160	58022792	58022793	58022794	58022795	58022796	58022797

Workpiece stop

Type	Id. No.
IMG 88	58415030
IMG 125-160	58315020

GTX – Universal stationary chuck for collets

Advantages of the stationary chuck:

- Rapid and easy mounting
- Quick change of the standard collets
- Sensitive adjustment of the clamping force possible
- Highest repeatability ≤ 0.01 mm
- Vertical or horizontal mounting possible
- Compact design, ideal for 5-axis machining
- Pull-down effect
- 3 versions for clamping diameters (4 to 100 mm)

The **GTX** stationary chuck for standard collets is particularly impressive, above all due to its high gripping force, accuracy and rigidity. Lateral bearing surfaces also allow the chuck to be mounted vertically or horizontally.
Profitability is increased due to considerably reduced set-up times since collets can be changed very quickly. Thanks to its extremely compact design, the **GTX** is ideal for 5-axis machining.

Stationary chuck

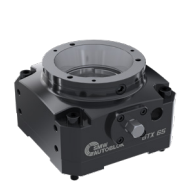

Page 166

GTX

Stationary chuck

- Manually actuated
- For standard collets
- Highest repeatability
- Sensitive adjustment of the clamping force

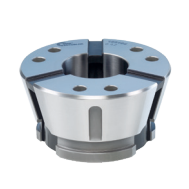

Page 168

GTX

Collets

- Collets for GTX
- Round, square, hexagonal

GTX

Stationary chuck

- For standard collets
- Manual actuated

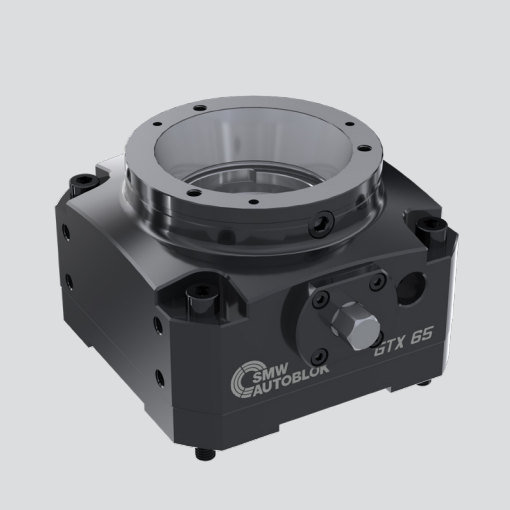

Application/customer benefits

- Highest clamping forces and rigidity for best machining quality
- Maximum economy due to quick change of collets and fast mounting
- High flexibility due to the use of standard collets
- Ideal for 5-axis machining due to the compact design
- Sensitive adjustment of the clamping force

Technical features

- Manual actuated by fast clamping function (clamping wrench SW 12)
- Repeatability ≤ 0.01 mm
- Pull-down effect
- Workpiece stop optional
- Horizontal or vertical mounting
- Threads for mounting a front stop

Standard equipment

Stationary chuck with clamping wrench

Application Examples

Stationary chuck GTX with standard collet for O.D. Clamping

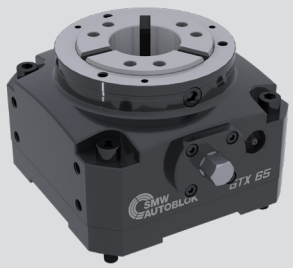

Clamping with standard collet

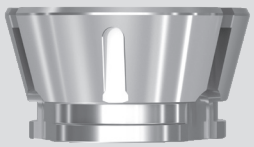

Stationary chuck GTX with premium adapter PA for O.D. Clamping

Clamping with slotted high-precision collet

Stationary chuck GTX with extension mandrel EMX-F-CO „Connect“ for I.D. Clamping

Clamping with extension mandrel „Connect“

Stationary chuck

GTX

- For standard collets
- Manual actuated

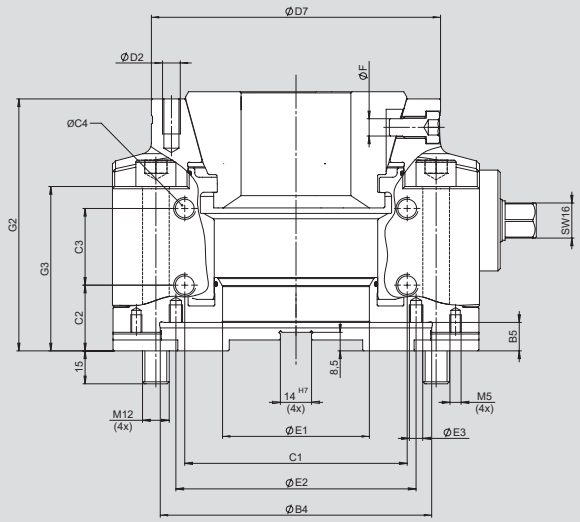

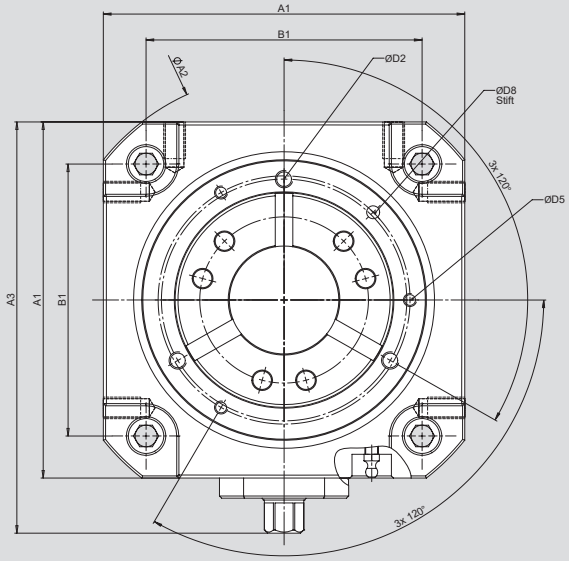

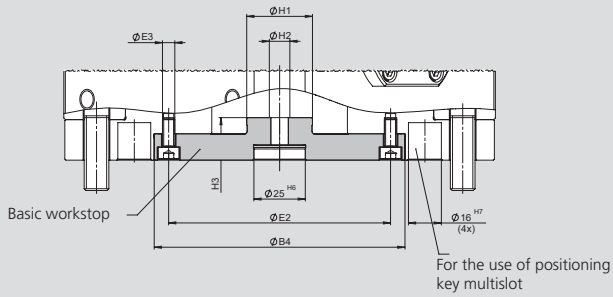

Subject to technical changes.
Collet not included

SMW-AUTOBLOK Type			GTX - 42	GTX - 65	GTX - 100
Id-No. GTX			9800210000	9800410000	9800610000
Id-No. Basic workstop GTX			9800210011	9800410011	9800610011
A1		mm	165	165	240
A2		mm	210	210	310
A3		mm	190.5	190,5	265,7
B1		mm	126	126	200
B4	+0,015	mm	122	122	190
B5		mm	13	13	15
C1		mm	100	100	150
C2		mm	30	30	37
C3		mm	35	35	30
C4	Thread / Depth	3 x 4	M10 / 17	M10 / 17	M10 / 18
D2	Thread / Depth / Pitch circle	3 x 120°	M8 / 16 / 93	M8 / 16 / 112	M8 / 18 / 162
D5	Thread / Depth / Pitch circle	3 x 120°	M6 / 12 / 95	M6 / 12 / 115	M8 / 18 / 162
D7	f7	mm	110	130	180
D8	Diameter / Depth / Pitch circle	1x	Ø6 / 10 / 95	Ø6 / 10 / 115	Ø6 / 10 / 162
E1		mm	43	66	102
E2	Basic workstop	mm	108	108	165
E3	Basic workstop / thread / depth	8 x 45°	M6 / 8	M6 / 8	M6 / 10
F		mm	5,8	7,9	7,8
G2		mm	115	115	138
G3		mm	75	75	80
H1	f7	mm	25	32	45
H2		1x	M10	M10	M12
H3		mm	21	21	25
Axial stroke		mm	5,5	5,5	8
Loading clearance in Ø		mm	1	1	2
Reserve stroke in Ø		mm	1	1	1,5
Max. Actuating torque		Nm	120	140	140
Max. Clamping force radial		kN	80	105	150
Weight without collets		kg	15,6	14,5	35,4

Collets for GTX 42

Steel collets with axial and radial grooves (△ smooth, △△ radial grooves)
ROUND*

Ø	**4△**	**5△**	**6△**	**7△**	**8△△**	**9△△**	**10△△**	**11**	**12**	**13**	**14**	**15**	**16**
Id. No.	192173	192174	192175	192176	192177	192178	192179	192180	192181	192182	192183	192184	192185
Ø	**17**	**18**	**19**	**20**	**21**	**22**	**23**	**24**	**25**	**26**	**27**	**28**	**29**
Id. No.	192186	192187	192188	192189	192190	192191	192192	192193	192194	192195	192196	192197	192198
Ø	**30**	**31**	**32**	**33**	**34**	**35**	**36**	**37**	**38**	**39**	**40**	**41**	**42**
Id. No.	192199	192200	192201	192202	192203	192204	192205	192206	192207	192208	192209	192210	192211

Collets in 0.5 mm increments on request

Steel collets with smooth clamping surface
ROUND*

Ø	**4**	**5**	**6**	**7**	**8**	**9**	**10**	**11**	**12**	**13**	**14**	**15**	**16**
Id. No.	192173	192174	192175	192176	193135	193136	193137	193138	193139	193140	193141	193142	193143
Ø	**17**	**18**	**19**	**20**	**21**	**22**	**23**	**24**	**25**	**26**	**27**	**28**	**29**
Id. No.	193144	192807	193145	192808	193146	193147	193148	193149	193150	193151	193152	193153	193154
Ø	**30**	**31**	**32**	**33**	**34**	**35**	**36**	**37**	**38**	**39**	**40**	**41**	**42**
Id. No.	193155	193156	193083	193157	193158	193159	193160	193161	193162	193163	193164	193165	193219

Collets in 0.5 mm increments on request

SQUARE**

□	**7△**	**8△△**	**9△△**	**10△△**	**11△△**	**12△△**	**13△△**	**14△△**	**15△△**	**16△△**	**17△△**	**18△△**	**19△△**
Id. No.	192212	192213	192214	192215	192216	192217	192218	192219	192220	192221	192222	192223	192224
□	**20△△**	**21△△**	**22△△**	**23△△**	**24△△**	**25△△**	**26△△**	**27△△**	**28△△**	**29△△**	**30△△**		
Id. No.	192225	192226	192227	192228	192229	192230	192231	192232	192233	192234	192235		

HEXAGONAL**

⬡	**7△**	**8△△**	**9△△**	**10△△**	**11△△**	**12△△**	**13△△**	**14△△**	**15△△**	**16△△**	**17△△**	**18△△**	**19△△**
Id. No.	192236	192237	192238	192239	192240	192241	192242	192243	192244	192245	192246	192247	192248
⬡	**20△△**	**21△△**	**22△△**	**23△△**	**24△△**	**25△△**	**26△△**	**27△△**	**28△△**	**29△△**	**30△△**	**31△△**	**32△△**
Id. No.	192249	192250	192251	192252	192253	192254	192255	192256	192257	192258	192259	192260	192261

Soft steel collets (pre-bored)
ROUND

Ø	**5**	**15**	**30**										
Id. No.	192262	192263	192264										

Boring ring 42 for soft steel collets

Id. No.	193399												

* Concentricity similar DIN 6343
** Concentricity has to be agreed

Collets for GTX 65

Steel collets with axial and radial grooves (△ smooth, △△ radial grooves)
ROUND*

Ø	**5△**	**6△**	**7△**	**8△△**	**9△△**	**10△△**	**11**	**12**	**13**	**14**	**15**	**16**	**17**
Id. No.	192265	192266	192267	192268	192269	192270	192271	192272	192273	192274	192275	192276	192277
Ø	**18**	**19**	**20**	**21**	**22**	**23**	**24**	**25**	**26**	**27**	**28**	**29**	**30**
Id. No.	192278	192279	192280	192281	192282	192283	192284	192285	192286	192287	192288	192289	192290
Ø	**31**	**32**	**33**	**34**	**35**	**36**	**37**	**38**	**39**	**40**	**41**	**42**	**43**
Id. No.	192291	192292	192293	192294	192295	192296	192297	192298	192299	192300	192301	192302	192303
Ø	**44**	**45**	**46**	**47**	**48**	**49**	**50**	**51**	**52**	**53**	**54**	**55**	**56**
Id. No.	192304	192305	192306	192307	192308	192309	192310	192311	192312	192313	192314	192315	192316
Ø	**57**	**58**	**59**	**60**	**61**	**62**	**63**	**64**	**65**				
Id. No.	192317	192318	192319	192320	192321	192322	192323	192324	192325				

Collets in 0.5 mm increments on request

Steel collets with smooth clamping surface
ROUND*

Ø	**5**	**6**	**7**	**8**	**9**	**10**	**11**	**12**	**13**	**14**	**15**	**16**	**17**
Id. No.	192265	192266	192267	193172	193173	192682	193174	192787	193175	193176	193177	193169	193178
Ø	**18**	**19**	**20**	**21**	**22**	**23**	**24**	**25**	**26**	**27**	**28**	**29**	**30**
Id. No.	193179	193180	193181	193182	192683	193183	193170	193065	193184	193066	193068	193069	193070
Ø	**31**	**32**	**33**	**34**	**35**	**36**	**37**	**38**	**39**	**40**	**41**	**42**	**43**
Id. No.	193185	192684	193186	193187	193188	193189	193190	193191	193192	192685	193193	193194	193171
Ø	**44**	**45**	**46**	**47**	**48**	**49**	**50**	**51**	**52**	**53**	**54**	**55**	**56**
Id. No.	193196	193197	193198	193199	193200	193201	193202	193203	193204	193205	193206	193207	193208
Ø	**57**	**58**	**59**	**60**	**61**	**62**	**63**	**64**	**65**				
Id. No.	193195	193209	193210	193211	193212	193213	193214	193215	193216				

Collets in 0.5 mm increments on request

SQUARE**

□	**8△△**	**9△△**	**10△△**	**11△△**	**12△△**	**13△△**	**14△△**	**15△△**	**16△△**	**17△△**	**18△△**	**19△△**	**20△△**
Id. No.	192326	192327	192328	192329	192330	192331	192332	192333	192334	192335	192336	192337	192338
□	**21△△**	**22△△**	**23△△**	**24△△**	**25△△**	**26△△**	**27△△**	**28△△**	**29△△**	**30△△**	**31△△**	**32△△**	**33△△**
Id. No.	192339	192340	192341	192342	192343	192344	192345	192346	192347	192348	192349	192350	192351
□	**34△△**	**35△△**	**36△△**	**37△△**	**38△△**	**39△△**	**40△△**	**41△△**	**42△△**	**43△△**	**44△△**	**45△△**	**46△△**
Id. No.	192352	192353	192354	192355	192356	192357	192358	192359	192360	192361	192362	192363	192364

HEXAGONAL**

⬡	**10△△**	**11△△**	**12△△**	**13△△**	**14△△**	**15△△**	**16△△**	**17△△**	**18△△**	**19△△**	**20△△**	**21△△**	**22△△**
Id. No.	192365	192366	192367	192368	192369	192370	192371	192372	192373	192374	192375	192376	192377
⬡	**23△△**	**24△△**	**25△△**	**26△△**	**27△△**	**28△△**	**29△△**	**30△△**	**31△△**	**32△△**	**33△△**	**34△△**	**35△△**
Id. No.	192378	192379	192380	192381	192382	192383	192384	192385	192386	192387	192388	192389	192390
⬡	**36△△**	**37△△**	**38△△**	**39△△**	**40△△**	**41△△**	**42△△**	**43△△**	**44△△**	**45△△**	**46△△**	**47△△**	**48△△**
Id. No.	192391	192392	192393	192394	192395	192396	192397	192398	192399	192400	192401	192402	192403
⬡	**49△△**	**50△△**											
Id. No.	192404	192405											

Soft steel collets (pre-bored)
ROUND

Ø	**8**	**20**	**40**
Id. No.	192406	192407	192408

Boring ring 65 for soft steel collets

Id. No.	193400

* Concentricity similar DIN 6343
** Concentricity has to be agreed

Collets for GTX 100

Steel collets with axial and radial grooves
ROUND*

Ø	**42**	**43**	**44**	**45**	**46**	**47**	**48**	**49**	**50**	**51**	**52**	**53**	**54**
Id. No.	195081	195082	195083	195084	195085	195086	195087	195088	195089	195090	195091	195092	195093
Ø	**55**	**56**	**57**	**58**	**59**	**60**	**61**	**62**	**63**	**64**	**65**	**66**	**67**
Id. No.	195094	195095	195096	195097	195098	195099	195100	195101	195102	195103	195104	195105	195106
Ø	**68**	**69**	**70**	**71**	**72**	**73**	**74**	**75**	**76**	**77**	**78**	**79**	**80**
Id. No.	195107	195108	195109	195110	195111	195112	195113	195114	195115	195116	195117	195118	195119
Ø	**81**	**82**	**83**	**84**	**85**	**86**	**87**	**88**	**89**	**90**	**91**	**92**	**93**
Id. No.	195120	195121	195122	195123	195124	195125	195126	195127	195128	195129	195130	195131	195132
Ø	**94**	**95**	**96**	**97**	**98**	**99**	**100**						
Id. No.	195133	195134	195135	195136	195137	195138	194742						

Steel collets with smooth clamping surface
ROUND*

Ø	**42**	**43**	**44**	**45**	**46**	**47**	**48**	**49**	**50**	**51**	**52**	**53**	**54**
Id. No.	195141	195142	195143	195144	195145	195146	195147	195148	195149	195150	195151	195152	195153
Ø	**55**	**56**	**57**	**58**	**59**	**60**	**61**	**62**	**63**	**64**	**65**	**66**	**67**
Id. No.	195154	195155	195156	195157	195158	195159	195160	195161	195162	195163	195164	195165	195166
Ø	**68**	**69**	**70**	**71**	**72**	**73**	**74**	**75**	**76**	**77**	**78**	**79**	**80**
Id. No.	195167	195168	195169	195170	195171	195172	195173	195174	195175	195176	195177	195178	195179
Ø	**81**	**82**	**83**	**84**	**85**	**86**	**87**	**88**	**89**	**90**	**91**	**92**	**93**
Id. No.	195180	195181	195182	195183	195184	195185	195186	195187	195188	194743	195189	195190	195191
Ø	**94**	**95**	**96**	**97**	**98**	**99**	**100**						
Id. No.	195192	195193	195194	195195	195196	195197	195198						

* Concentricity similar DIN 6343

Changing device for GTX 42, 65, 100

Changing device

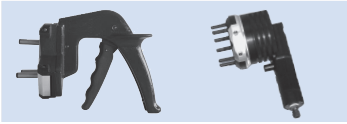

Size / Accessories	GTX 42	GTX 65	GTX 100
Manual	196842	196844	-
Pneumatic	192151	192153	194744

Twin Vises

Page 174

SLX *digit*

Hydraulic long-stroke vise

- Digitized by integrated sensoric
- Automated quick jaw change
- Self-centering clamping
- **proofline®**= fully sealed - low maintenance

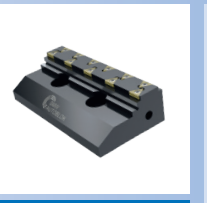

Page 176

SLX *digit*

Jaws and accessories

- SinterGrip top jaw
- Top jaw (soft, high)
- Query kit

Page 180

PTP

Protected pneumatic vise 100, 125, 160, 200

- Protected against swarf and chips
- Pneumatic version
- Normal stroke: PTP-N / Long stroke: PTP-L
- Fixed jaw: PTP-F
- Pneumatic jaw stroke control valve
- Air purge
- Air sensing

Page 182

PTH

Protected hydraulic vise 100, 125, 160, 200, 250

- Protected against swarf and chips
- Hydraulic version
- Normal stroke: PTH-N / Long stroke: PTH-L
- Fixed jaw: PTH-F
- Pneumatic jaw stroke control valve
- Air purge
- Air sensing

Page 184

PT-RR

Protected vise 160, 200, 250

- QUICK JAWS CHANGE
- Pneumatic version
- Hydraulic version
- Pneumatic jaw stroke control valve
- Long stroke: PTP-L-RR / PTH-L-RR
- Air sensing
- OD and ID clamping

Page 190

STV-2

Spring and air operated vise 125, 180, 225

- Protected
- Springs to clamp, pneumatic to open
- Turbo function to increase the clamping forces
- Pneumatic jaw stroke control valve
- Normal stroke: STV-2N / Long stroke: STV-2L
- Air purge
- Air sensing

Page 192

STV-3

Spring and air operated vise 180, 225

- Protected
- 3 jaws
- Springs to clamp, pneumatic to open
- Turbo function to increase the clamping forces
- Normal stroke: STV-3N / Long Stroke STV-3L
- Pneumatic jaw stroke control valve
- Air purge

Page 196

TVP

Pneumatic vise 100, 160, 200, 250, 315

- Normal stroke: TVP-N
- Long stroke: TVP-L
- Fixed jaw: TVP-F
- Air purge

Page 198

TVH

Hydraulic vise 100, 160, 200

- Normal stroke: TVH-N
- Long stroke: TVH-L
- Fixed jaw: TVH-F
- Air purge

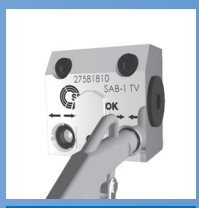

Page 202

SAB-1

Safety valve (optional)

- To maintain air pressure during pallet transportation / storage and machining

Page 204

Jaws

Accessories

- Soft top jaws
- Soft top jaws for PT-RR
- Wide hard top jaws
- Narrow hard top jaws
- Jaws for SinterGrip

3

SLX *digit*

Hydraulic long-stroke vise

- Digitized through integrated sensor technology
- Automated quick jaw change
- Self-centering clamping

Application/customer benefits

- Integrated sensor technology: Measuring system for jaw position
- Quick jaw change for shortest changeover times, also automatically via robot
- High clamping force for high cutting performance
- Extra long clamping stroke for maximum flexibility
- Integrated safety valves to maintain clamping force in case of pressure drop
- Connection for pressure monitoring
- Hydraulic connection laterally or from below through the connecting plate for highest flexibility

Technical features

- Hydraulic actuation max. 250 bar
- Clamping force max. 75 kN
- Jaw stroke 55 mm (per jaw)
- Only suitable for O.D. clamping
- **proofline® =** fully sealed - low maintenance

SLX *digit*

Quick jaw change / automated by robot

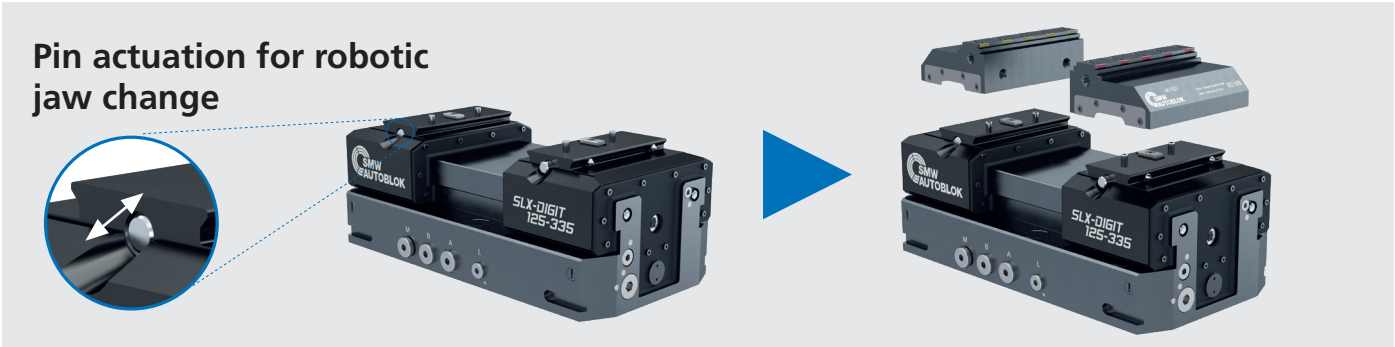

Dimension and technical data

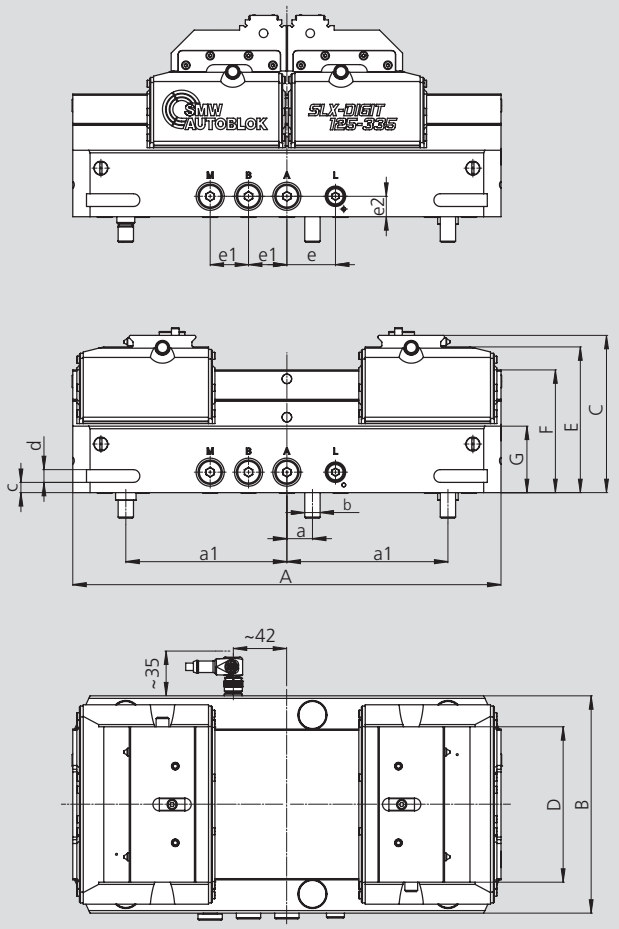

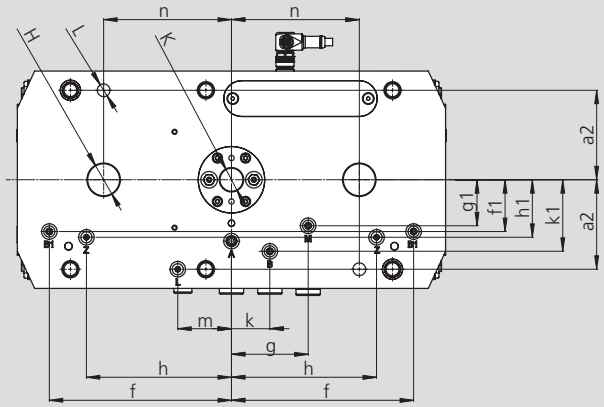

Connection	
A	Open
B	Clamping
B1	Clamping with non-return valve
L	Air sensing top jaw
M	Connection for pressure monitoring
Z	Control connection non-return valve

Subject to technical changes.
For more detailed information please ask our customer service.

SMW-AUTOBLOK Type SLX *digit*			125-335
Length	**A**	mm	335
	B	mm	170
	C	mm	123
Jaw width	**D**	mm	121.6
	E	mm	114
	F	mm	96
	G	mm	52
Fit	**H**	mm	Ø25^{H7} x 5.5
Fit	**K**	mm	Ø18^{H7} x 5.5
	L	mm	Ø10^{H7} x 12
Mounting hole	**a / a1 / a2**	mm	20 / 126 / 70
	b	mm	6 x M12
	c	mm	8
	d	mm	10
	e / e1 / e2	mm	38 / 30 / 16
	f / f1	mm	142.5 / 40.5
	g / g1	mm	60 / 36
	h / h1	mm	113.5 / 45
	k / k1	mm	30 / 56
	m	mm	70
Max. clamping force at 250 bar		kN	75
Max. operating pressure		bar	250
Stroke per jaw		mm	55
Weight		kg	35.5

Type	Output signal	Id. No. Standard actuation	Id. No. External stop valve actuation
SLX digit connection sideways	0 - 10 V	461750	461745
SLX digit connection sideways	4 - 20 mA	461751	461746
SLX digit connection below	0 - 10 V	461752	461747
SLX digit connection below	4 - 20 mA	461753	461748
SLX digit without position monitoring	-	461754	461749

SLX *digit*

Hydraulic long-stroke vise

Accessories

- Top jaws
- Connecting cables LPS 4.0

SLX-125-335
Top jaw SinterGrip

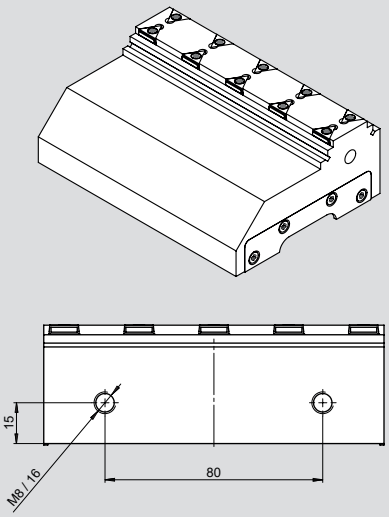

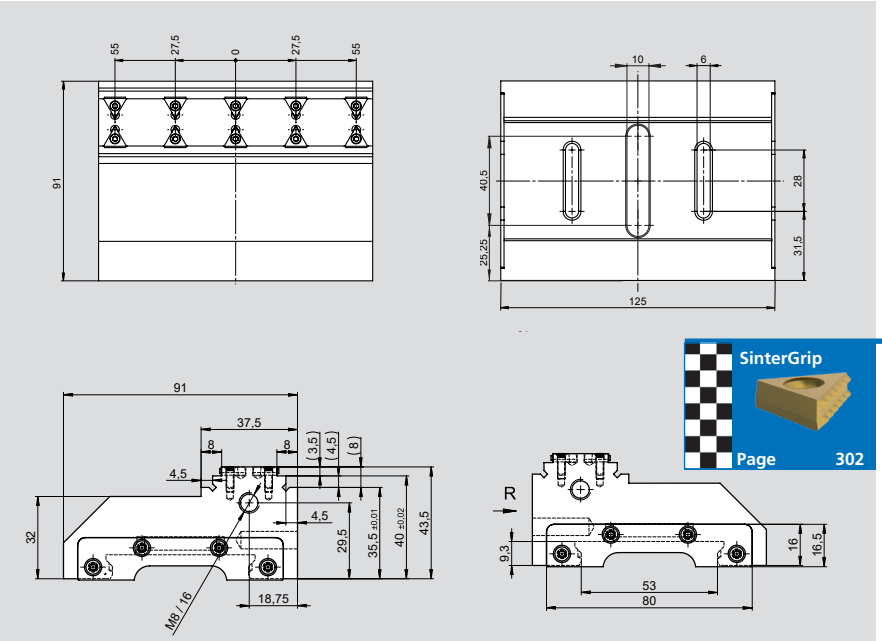

SinterGrip
Page 302

Type	Id. No.	max. total clamping force	Clamping range A / B with SinterGrip	Clamping range A / B smooth
SLX-125-335	461521	75 kN	14,5-223,5 / 123-232 mm	9-118 / 116-225 mm

SLX-125-335-H45
Soft top jaw

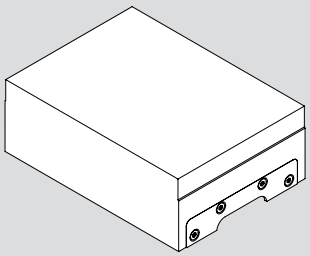

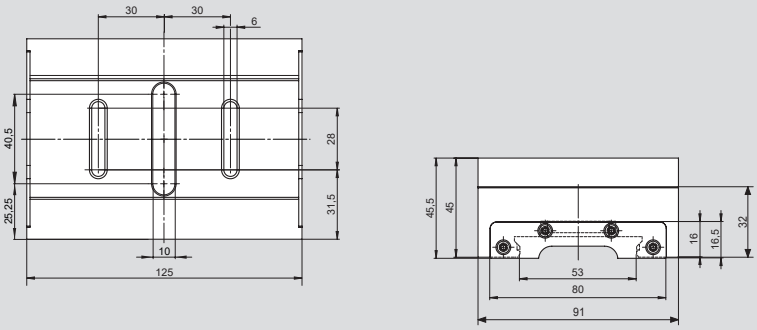

Type	Id. No.	max. total clamping force	min. jaw height	Weight
SLX-125-335-H45	461523	75 kN	32 mm	3,5 kg

SLX-125-335-H65
Soft top jaw high

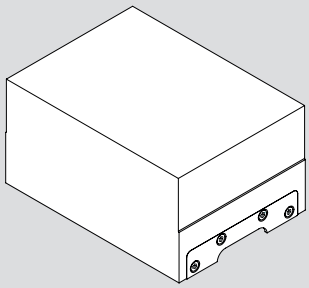

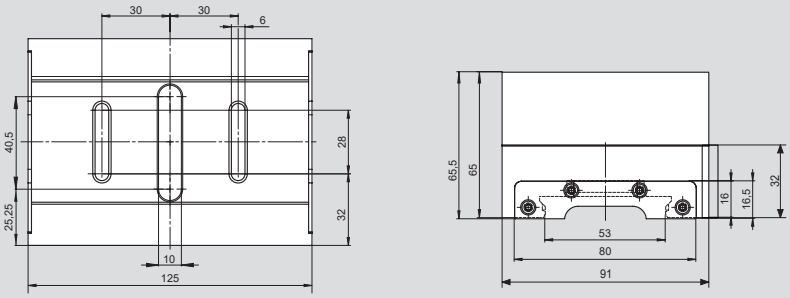

Type	Id. No.	max. total clamping force	min. jaw height	Weight
SLX-125-335-H65	461525	75 kN	32 mm	5,2 kg

Cable* for LPS 4.0 80 IO	Length	Id. No.
Connecting cable with straight plug M12 x 1 5-pole	5 m 10 m 15 m	208244 208245 208246
Connecting cable with angled M12 x 1 5-pole	5 m 10 m 15 m	208247 208248 208249

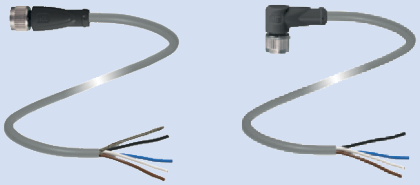

* Shielded PUR cable, 1 side cable end, 1 side with socket M12 x 1, machined and gold-plated contacts.

Integration example with inductive coupling system

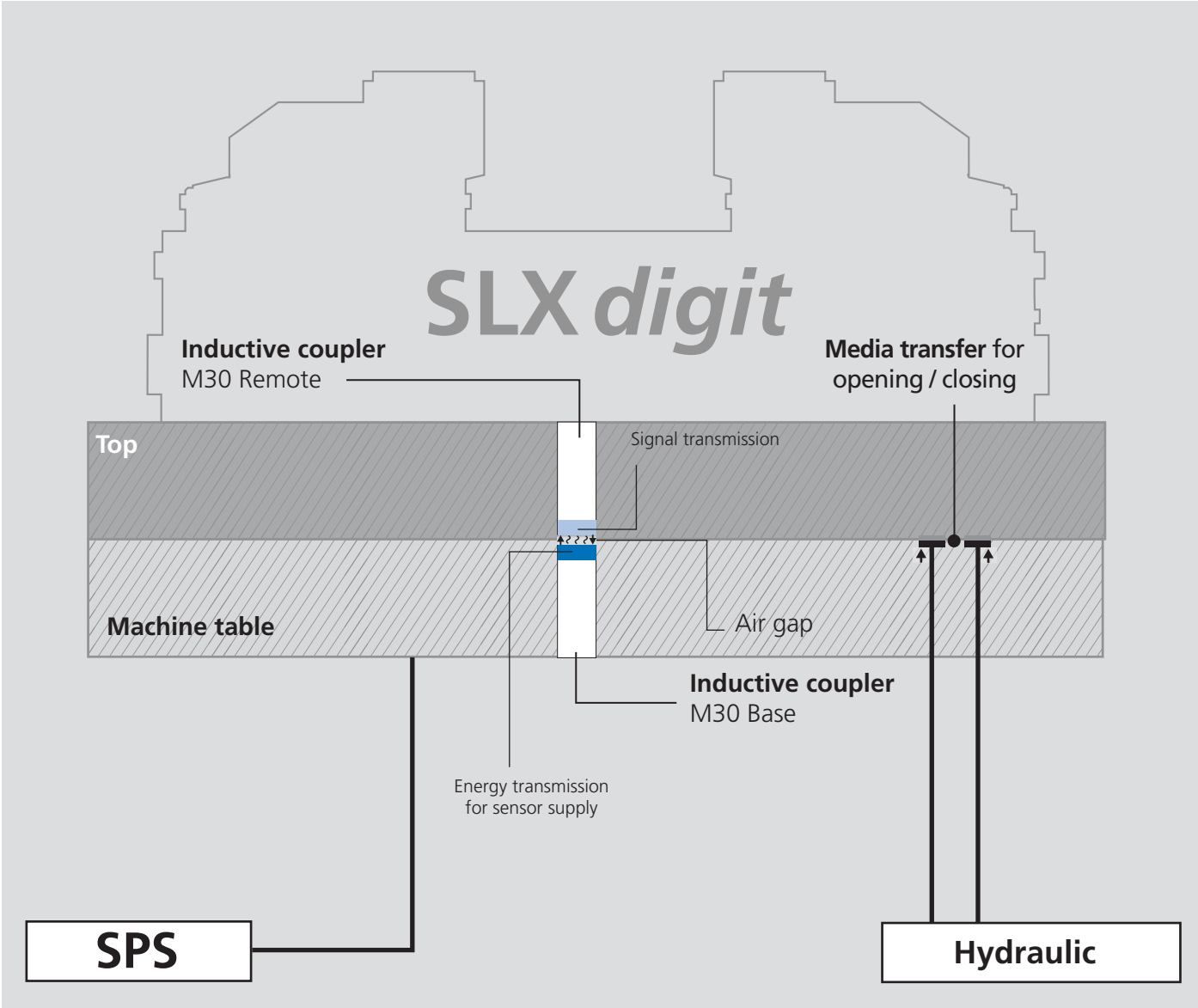

Inductive coupling system:
further information at www.smw-electronics.de

TWIN VISES

Range of products

Industry 4.0 Product

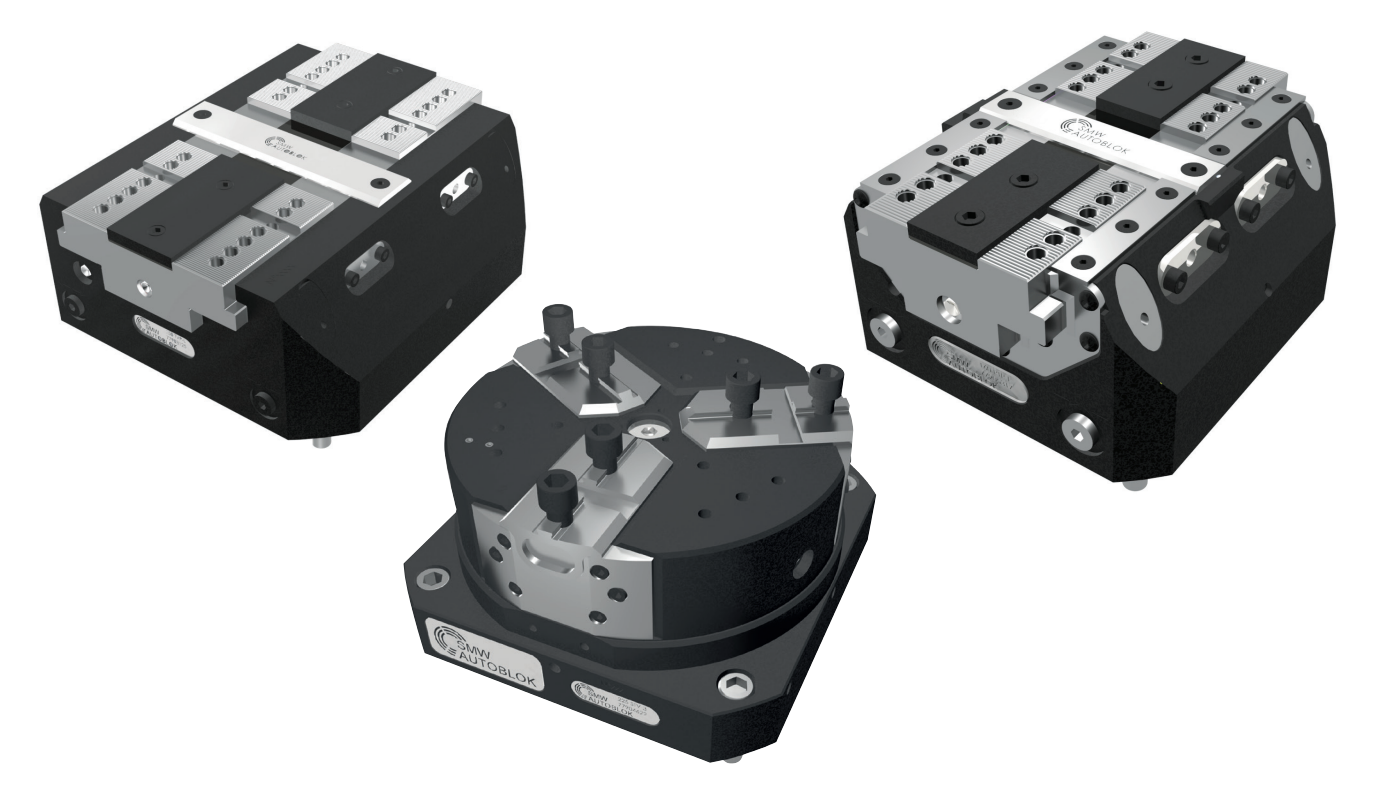

1 PT - PROTECTED TWIN VISES

SIZES AVAILABLE 100-125-160-200-250

- Pneumatic and Hydraulic Version
- Pneumatic Valve (optional)
- Air Sensing
- Master jaws guide protected against swarf and chips 1.1
- Normal Stroke
- Long Stroke
- Fixed Jaw

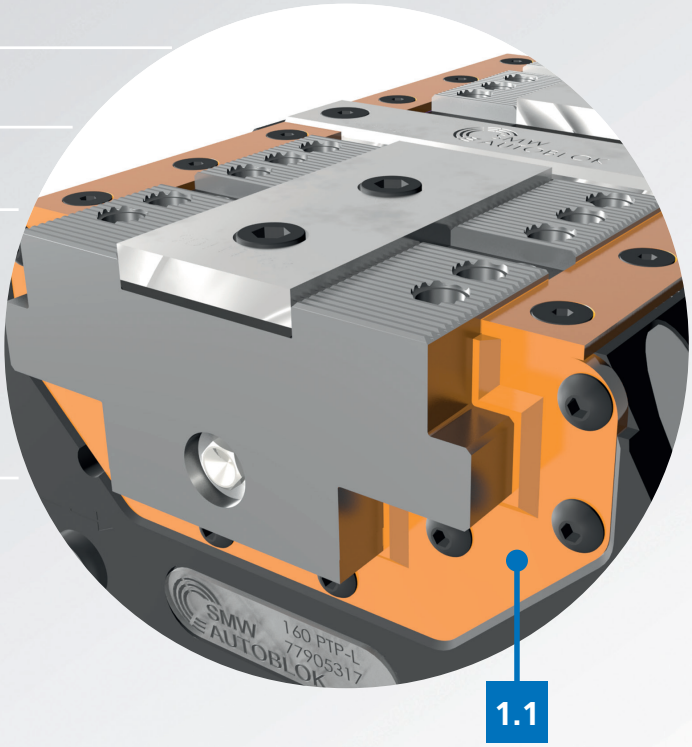

1.1

2 STV - SPRING AND AIR OPERATED TWIN VISES

SIZES AVAILABLE 180-225

- STV 2 Jaws (also 125) and STV 3 Jaws
- Air Sensing
- Master jaws guide protected against swarf and chips
- Spring Clamped and Air Operated 2.1 2.2
- Safety Valve SAB-1 (optional)
- Pneumatic Valve (optional)
- Normal stroke
- Long stroke

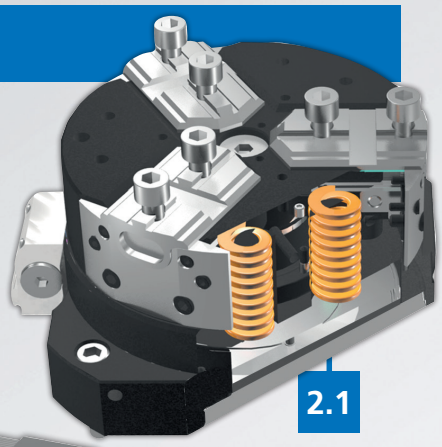

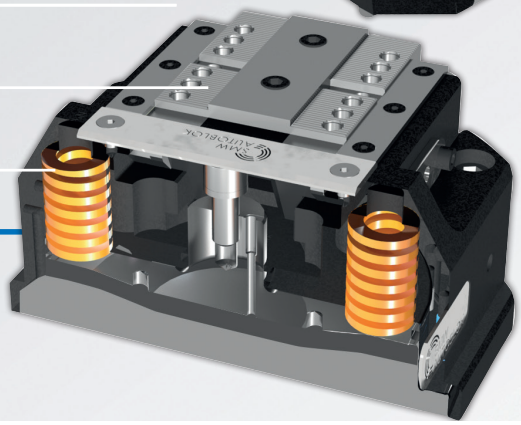

3 TV - STANDARD TWIN VISES

SIZES AVAILABLE 100-160-200-250-315

- Pneumatic and Hydraulic Version
- Air Sensing 3.1
- Stroke control Proximity (optional)
- Normal Stroke
- Long Stroke
- Fixed Jaw

4 RR - QUICK JAWS CHANGE

PROTECTED TWIN VISE with QUICK CHANGE

- Pneumatic and Hydraulic Version
- Long stroke
- OD and ID Clamping

PTP-N/PTP-L/PTP-F

PROTECTED PNEUMATIC TWIN VISE

- Pneumatic version
- Pneumatic open / close control (stroke control) master jaws valve

- PTP-N: Normal stroke
- PTP-L: Long stroke
- PTP-F: One fixed jaw

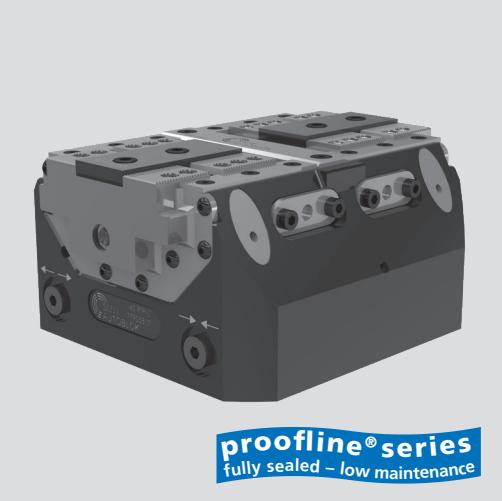

Application/customer benefits

- Compact design
- Master jaws guide protected against swarf and chips (proofline)
- Highest repeatability
- Highest rigidity
- Linear pressure adjustment

Technical features

- Housing and functional parts hardened for high precision and long life
- Ready for air purge
- Ready for central grease lubrication
- Master jaws with both Tongue & Groove and fine serration 1.5 mm x 60°
- OD and ID clamping
- Pneumatic open / close control (stroke control) master jaws valve (optional)
- Air sensing
- Lubrication with SMW-AUTOBLOK K67 grease
- Stroke control via proximity switches (optional) on all types and sizes except 100 PTP-F
- 100 PTP-F only one stroke control via proximity switch for full closed vise

Standard equipment

Self-centering vise without top jaws
All bolts and centering bushings included

Gripping force diagrams

PTP-N ■100 ■125 ■160 ■200

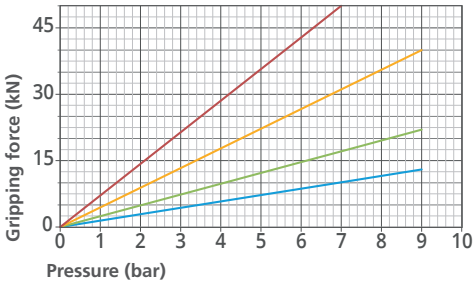

PTP-L ■100 ■125 ■160 ■200

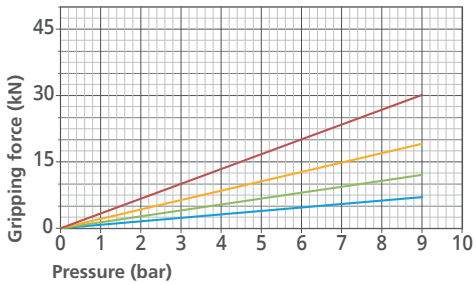

PTP-F ■100 ■125 ■160 ■200

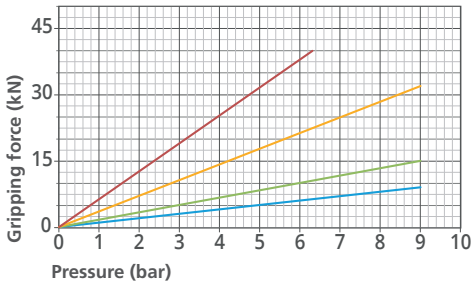

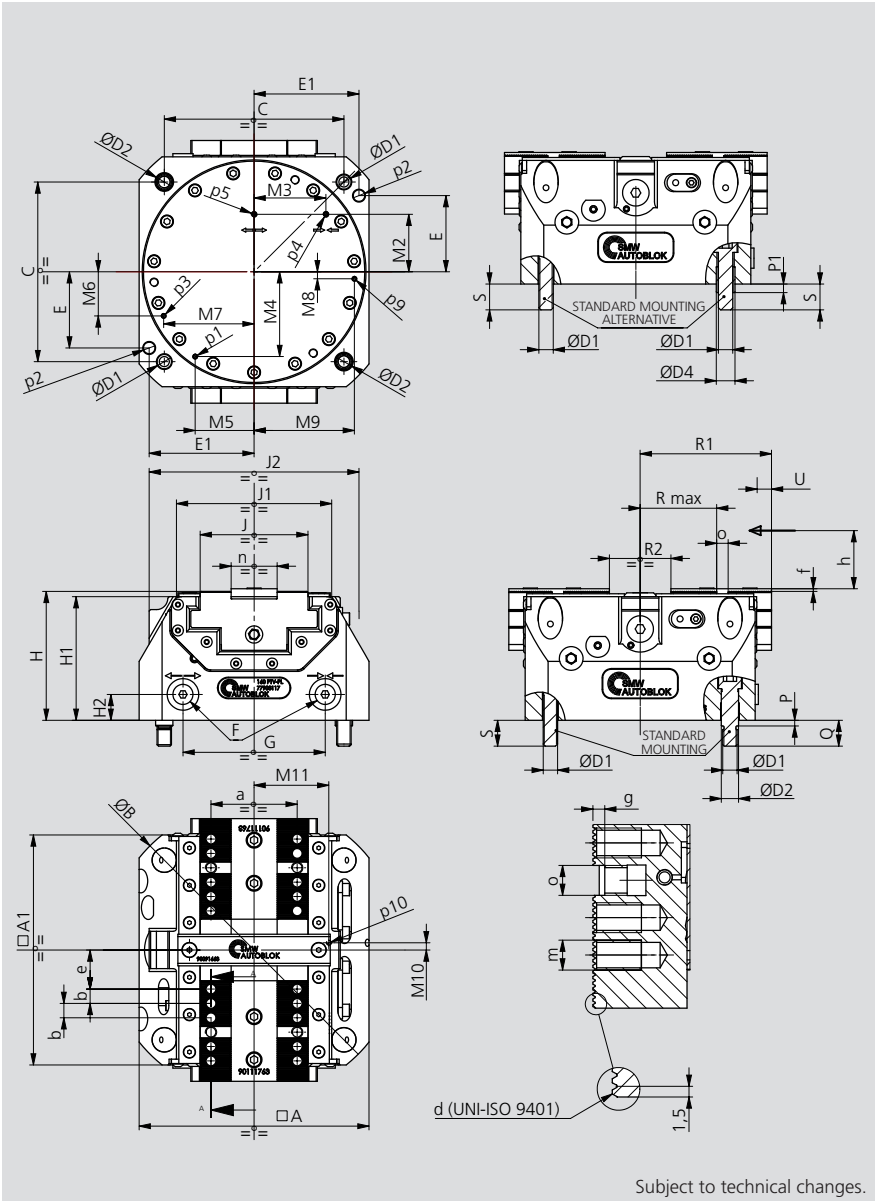

Subject to technical changes.

PTP-N/PTP-L/PTP-F

- Pneumatic version
- Pneumatic open / close control (stroke control) master jaws valve
- PTP-N: Normal stroke
- PTP-L: Long stroke
- PTP-F: One fixed jaw

PROTECTED PNEUMATIC TWIN VISE

Type	Id. No.	Stroke type	Stroke / jaw [mm]	Max. Clamping force [kN]	Piston area [cm²]	Max. Operating pressure [bar]	Repeatability [mm]	Weight [kg]
100 PTP-N	77905211	NORMAL	2.6	13	45	9	0.01	5.5
100 PTP-L	77905311	LONG	6	7				
100 PTP-F	77905411	FIXED JAW	6	9				
125 PTP-N	77905212	NORMAL	2.6	22	78	9	0.01	7
125 PTP-L	77905312	LONG	6	12				
125 PTP-F	77905412	FIXED JAW	6	15				
160 PTP-N	77905217	NORMAL	3	40	128	9	0.01	13
160 PTP-L	77905317	LONG	8.4	19				
160 PTP-F	77905417	FIXED JAW	8.4	32				
200 PTP-N	77905221	NORMAL	4.2	50	194	7	0.02	23
200 PTP-L	77905321	LONG	10.2	30		9		
200 PTP-F	77905421	FIXED JAW	10.2	38		6		

PTP			100	125	160	200
	A	mm	100	125	160	200
	A1	mm	110	125	160	200
	B(Ø)	mm	136	162	205	255
	C	mm	80	100	125	160
	D1(Ø)	mm	M8	M8	M10	M12
	D2 (Øf7)	mm	10	10	12	14
	D4 (Øjs7)	mm	11	11	13	16
	E	mm	32	/	53	73
	E1	mm	45	/	73	92
	F	mm	M5	M5	G1/8"	G1/8"
	G	mm	59	59	99	127
	H	mm	75.5	80.5	89.7	97
	H1	mm	72	77	86	93
	H2	mm	15	17	18	18
	J	mm	47	47	75	94
	J1	mm	82	100	108	144
	J2	mm	100	121	146	166
	M2	mm	32	32	40	50
	M3	mm	29.5	29.5	50	65
	M4	mm	34,2	40.5	59	72.8
	M5	mm	27.7	38.5	41	52.9
	M6	mm	14,2	10.6	30.7	39.5
	M7	mm	41.1	54.5	62.9	80.9
	M8	mm	8.3	4.8	4.9	9.4
	M9	mm	42.7	55.3	69.8	89.5
	M10	mm	5	5	5	8
	M11	mm	34	34	52	60
	P	mm	4	4	4	5
	P1	mm	4	4	6	6
	Q	mm	15	15	18	20
Min/max (long stroke)	**R max**	mm	25.6/31.6	25.6/31.6	44.8/53.2	54.5/64.7
Min/max (normal stroke)	**R max**	mm	25.4/28	25.4/28	45/48	54.5/58.7
Min/max (fixed jaw)	**R max**	mm	25.6/31.6	25.6/31.6	44.8/53.2	54.5/64.7
Min/max (long stroke)	**R1**	mm	57.5/63.5	64.5/70,5	82.5/90.9	102.5/112.7
Min/max (normal stroke)	**R1**	mm	57.4/60	64.4/67	82.5/85.5	102.8/107
Min/max (fixed jaw)	**R1**	mm	57.5/63.5	64.5/70.5	82.5/90.9	102.5/112.7
Min/max (long stroke)	**R2**	mm	20/32	20/32	26/42.8	30/50.4
Min/max (normal stroke)	**R2**	mm	19.8/25	19.8/25	26/32	30.6/39
Min/max (fixed jaw)	**R2**	mm	20/26	20/26	26/34.4	30/40.2
	S	mm	15	15	18	20
Long stroke	**U**	mm	6	6	8.4	10.2
Normal stroke	**U**	mm	2.6	2.6	3	4.2
Fixed jaw	**U**	mm	6	6	8.4	10.2
	a	mm	35	35	60	80
	b	mm	7	7	10	10
Serration	**d**	mm	1.5x60°	1.5x60°	1.5x60°	1.5x60°
Min/max (long stroke) (fixed jaw)	**e**	mm	14.6/20.6	14.6/20.6	18.8/27.2	28.5/38.7
Min/max (normal stroke)	**e**	mm	14.4/17	14.4/17	19/22	28.5/32.7
	f	mm	1.8	1.8	1.8	2
	g	mm	2.7	2.7	3.2	4
	h	mm	16	16	25	35
	m	mm	M6x10	M6x10	M8x12	M8x12
	n (g6)	mm	20	20	32	40
	o (H7)	mm	6	6	8	8
Lubrication fitting	**p1**	mm	M4	M4	M4	M4
	p2 (øH7)	mm	/	/	8x14	8x14
Pneumatic open/close- stroke control m.Jaws or air purge	**p3**	mm	M4	M4	M4	M4
Vise close	**p4**	mm	M4	M4	M4	M4
Vise open	**p5**	mm	M4	M4	M4	M4
Air sensing connection	**p9**	mm	M4	M4	M4	M4
Air sensing outlet (under front plate)	**p10**	mm	M4	M4	M4	M4

PTH-N/PTH-L/PTH-F

PROTECTED HYDRAULIC TWIN VISE

- Hydraulic version
- Pneumatic open / close control (stroke control) master jaws valve

- PTH-N: Normal stroke
- PTH-L: Long stroke
- PTH-F: One fixed Jaw

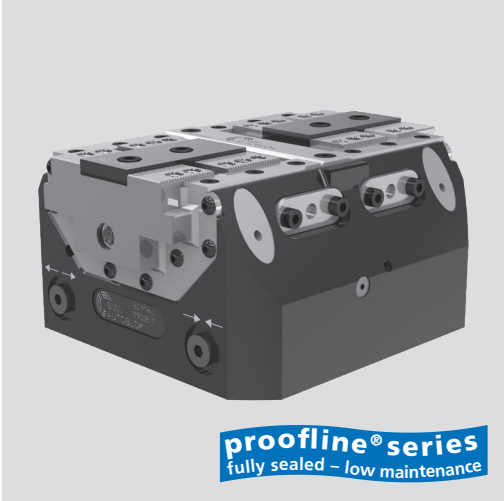

Application/customer benefits

- Compact design
- Master jaws guide protected against swarf and chips
- Highest repeatability
- Highest rigidity
- Linear pressure adjustment

Technical features

- Housing and functional parts hardened for high precision and long life
- Ready for air purge
- Ready for central grease lubrication
- Master jaws with both Tongue & Groove and fine serration 1.5 mm x 60°
- OD and ID clamping
- Pneumatic open / close control (stroke control) master jaws valve (optional)
- Air sensing
- Lubrication with SMW-AUTOBLOK K67 grease
- Stroke control via proximity switches (optional) on all types and sizes except 100 PTH-F
- 100 PTH-F: Only one stroke control via proximity switch for full closed vise

Standard equipment

Self-centering vise without top jaws
All bolts and centering bushings included

Gripping force diagrams

PTH-N ■ 100 ■ 125 ■ 160 ■ 200

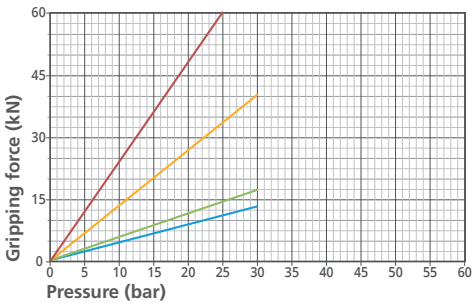

PTH-L ■ 100 ■ 125 ■ 160 ■ 200 ■ 250

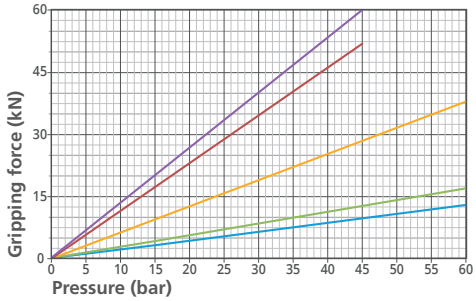

PTH-F ■ 100 ■ 125 ■ 160 ■ 200

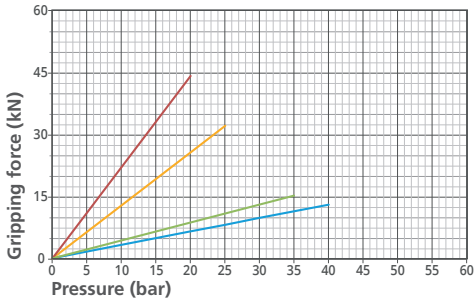

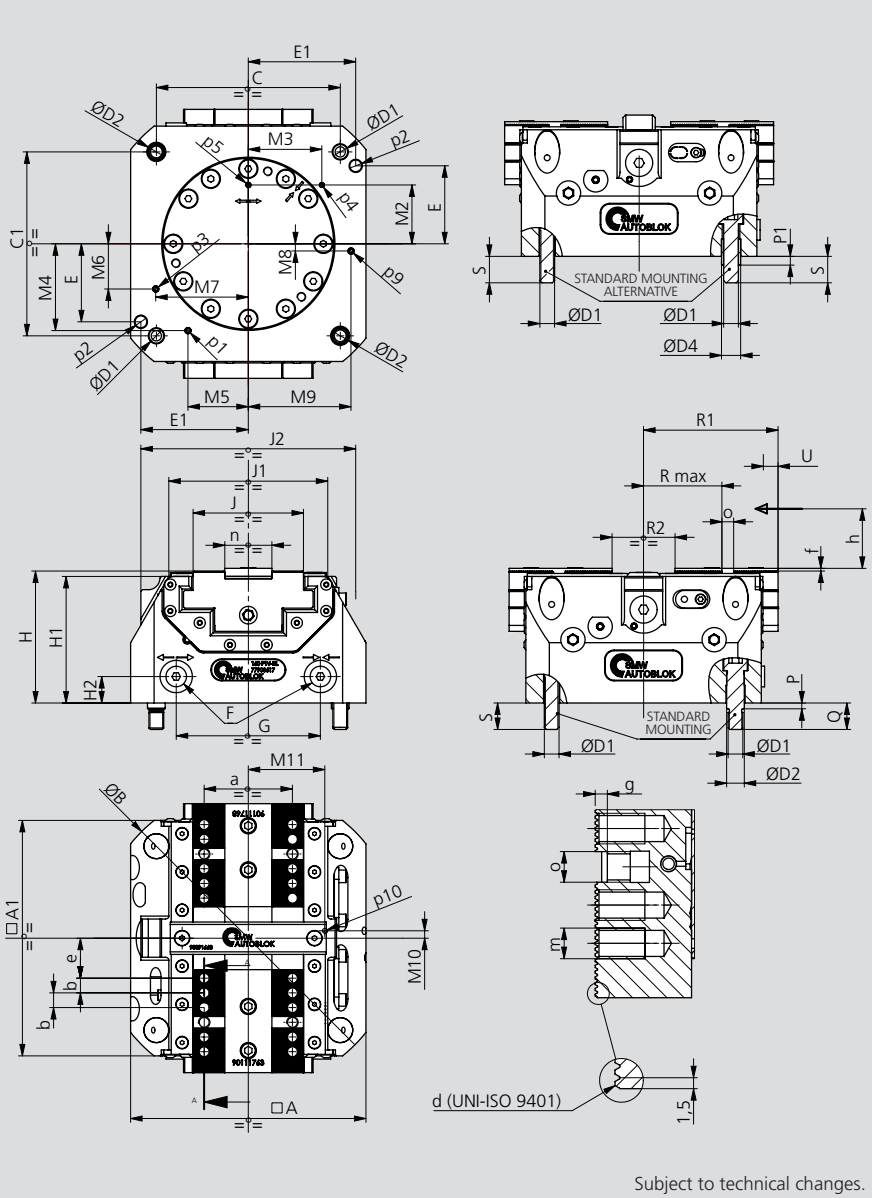

Subject to technical changes.

PTH-N/PTH-L/PTH-F

- Hydraulic version
- Pneumatic open / close control (stroke control) master jaws valve
- PTH-N: Normal stroke
- PTH-L: Long stroke
- PTH-F: One fixed Jaw

PROTECTED HYDRAULIC TWIN VISE

Type	Id.No.	Stroke type	Stroke / jaw [mm]	Max. Clamping force [kN]	Piston area [cm²]	Max. Operating pressure [bar]	Repeatability [mm]	Weight [kg]
100 PTH-N	77905711	NORMAL	2.6	13	15	30	0.01	6
100 PTH-L	77905811	LONG	6			60	0.01	
100 PTH-F	77905911	FIXED JAW	6			40	0.01	
125 PTH-N	77905712	NORMAL	2.6	17	20	30	0.01	8
125 PTH-L	77905812	LONG	6			60	0.01	
125 PTH-F	77905912	FIXED JAW	6	15		35	0.01	
160 PTH-N	77905717	NORMAL	3	40	45	30	0.01	15
160 PTH-L	77905817	LONG	8.4	38		60	0.01	
160 PTH-F	77905917	FIXED JAW	8.4	32		25	0.01	
200 PTH-N	77905721	NORMAL	4.2	60	68	25	0.02	25
200 PTH-L	77905821	LONG	10.2	52		45	0.02	
200 PTH-F	77905921	FIXED JAW	10.2	44		20	0.02	
250 PTH-L	77905826	LONG	15	60	113	45	0.02	35

PTH			100	125	160	200	250
	A	mm	100	125	160	200	210
	A1	mm	110	125	160	200	238
	B(Ø)	mm	136	162	205	255	300
	C	mm	80	100	125	160	180
	C1	mm	80	100	125	160	200
	D1(Ø)	mm	M8	M8	M10	M12	M12
	D2 (Øf7)	mm	10	10	12	14	14
	D4 (Øjs7)	mm	11	11	13	16	16
	E	mm	32	/	53	73	80
	E1	mm	45	/	73	92	90
	F	mm	G1/8"	G1/8"	G1/8"	G1/8"	G1/8"
	G	mm	56	57	98	128	90
	H	mm	75,5	80,5	89,7	97	105
	H1	mm	72	77	86	93	100
	H2	mm	15	17	18	18	20
	J	mm	47	47	75	94	125
	J1	mm	82	100	108	144	180
	J2	mm	100	121	146	166	-
	M2	mm	32	32	40	50	80
	M3	mm	29.5	29.5	50	65	45
	M4	mm	34,2	40,5	59	72,8	89,8
	M5	mm	27.7	38,5	41	52,9	65,2
	M6	mm	14,2	10,6	30,7	39,5	0
	M7	mm	41,1	54,5	62,9	80,9	92
	M8	mm	8,3	4,8	4,9	9,4	6,7
	M9	mm	42,7	55,3	69,8	89,5	76,7
	M10	mm	5	5	5	8	9
	M11	mm	34	34	52	60	78
	P	mm	4	4	4	5	5
	P1	mm	4	4	6	6	6
	Q	mm	15	15	18	20	20
Min. / max. (long stroke)	**R max**	mm	25.6/31.6	25.6/31.6	44.8/53.2	54.5/64.7	51,5/66,5
Min. / max. (normal stroke)	**R max**	mm	25,4/28	25,4/28	45/48	54.5/58.7	-
Min. / max. (fixed jaw)	**R max**	mm	25.6/31.6	25.6/31.6	44.8/53.2	54.5/64.7	-
Min. / max. (long stroke)	**R1**	mm	57.5/63.5	64,5/70,5	82.5/90.9	102.5/112.7	119,5/134,5
Min. / max. (normal stroke)	**R1**	mm	57.4/60	64,4/67	82.5/85.5	102.8/107	-
Min. / max. (fixed jaw)	**R1**	mm	57.5/63.5	64,5/70,5	82.5/90.9	102.5/112.7	-
Min. / max. (long stroke)	**R2**	mm	20/32	20/32	26/42.8	30/50.4	39/69
Min. / max. (normal stroke)	**R2**	mm	19.8/25	19.8/25	26/32	30.6/39	-
Min. / max. (fixed jaw)	**R2**	mm	20/26	20/26	26/34.4	30/40.2	-
	S	mm	15	15	18	20	20
Long stroke	**U**	mm	6	6	8.4	10.2	15
Normal stroke	**U**	mm	2.6	2.6	3	4.2	-
Fixed jaw	**U**	mm	6	6	8.4	10.2	-
	a	mm	35	35	60	80	90
	b	mm	7	7	10	10	12
Serration	**d**	mm	1,5x60°	1,5x60°	1,5x60°	1,5x60°	1,5x60°
Min. / max. (long stroke)	**e**	mm	14.6/20.6	14.6/20.6	18.8/27.2	28.5/38.7	32,5/47,5
Min. / max. (normal stroke)	**e**	mm	14.4/17	14.4/17	19/22	28.5/32.7	-
Min. / max. (fixed jaw)	**e**	mm	14.6/20.6	14.6/20.6	18.8/27.2	28.5/38.7	-
	f	mm	1.8	1.8	1.8	2	2,5
	g	mm	2.7	2.7	3.2	4	4
	h	mm	16	16	25	35	40
	m	mm	M6x10	M6x10	M8x12	M8x12	M10x15
	n (g6)	mm	20	20	32	40	50
	o (H7)	mm	6	6	8	8	10
Lubrication fitting	**p1**	mm	M4	M4	M5	M5	M5
	p2 (øH7)	mm	/	/	8x14	8x14	10x20
Pneumatic open / close - stroke control master jaws or air purge	**p3**	mm	M4	M4	M5	M5	M5
Vise closed	**p4**	mm	M4	M4	M4	M4	M5
Vise open	**p5**	mm	M4	M4	M4	M4	M5
Air sensing connection	**p9**	mm	M4	M4	M5	M5	M5
Air sensing outlet (under front plate)	**p10**	mm	M4	M4	M4	M4	M5

PTP-L-RR

PROTECTED PNEUMATIC TWIN VISE WITH QUICK CHANGE

- **Quick jaws change**
- **Pneumatic open/close control (stroke control) master jaws valve**
- **Pneumatic version**
- **PTP-L-RR: Long stroke**

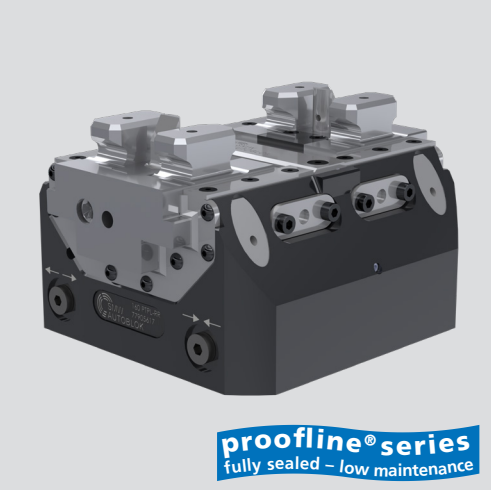

Application/customer benefits

- Compact design
- Master jaws guide protected against swarf and chips
- Highest repeatability
- Highest rigidity
- Linear pressure adjustment
- Quick jaws change

Technical features

- Housing and functional parts hardened for high precision and long life
- Ready for air purge
- Ready for central grease lubrication
- Quick jaw change master jaw
- OD and ID clamping
- Pneumatic open/close control (stroke control) master jaws valve
- Air sensing
- Lubrication with SMW-Autoblok K67 grease
- Stroke control via proximity switches

Standard equipment

Self-centering vise without top jaws
All bolts and centering bushings included

Gripping force diagrams

PTP-L-RR ■ 160 ■ 200

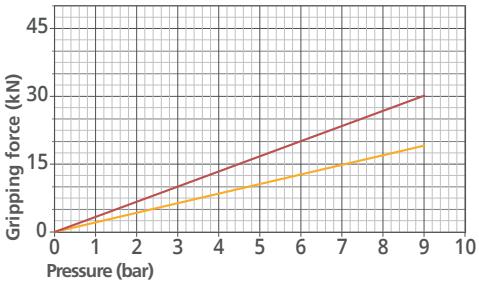

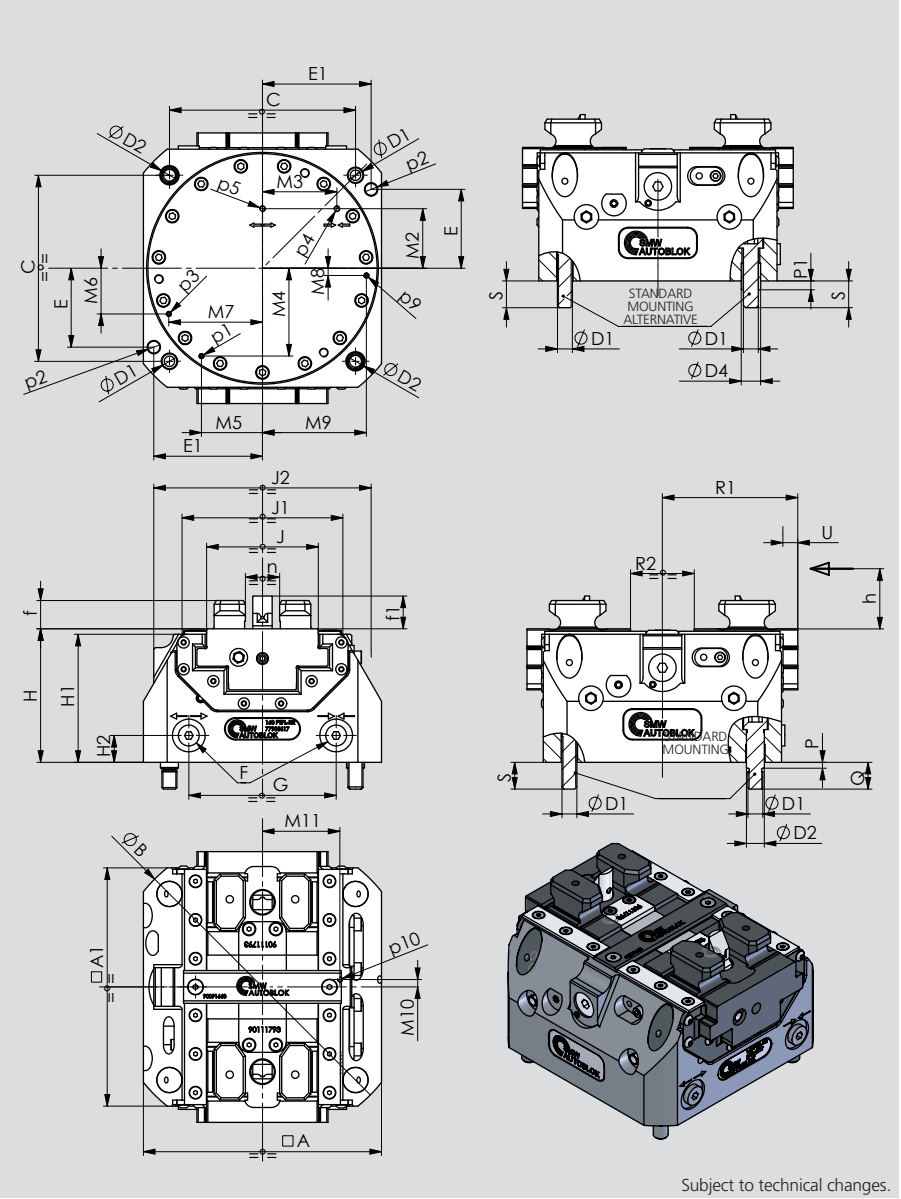

Subject to technical changes.

PTP-L-RR

PROTECTED PNEUMATIC TWIN VISE WITH QUICK CHANGE

- Quick jaws change
- Pneumatic open/close control (stroke control) master jaws valve
- Pneumatic version
- PTP-L-RR: Long stroke

Type	Id.No.	Stroke type	Stroke/jaw [mm]	Max clamping force [kN]	Piston area [cm²]	Max. Operating pressure [bar]	Repeatability [mm]	Weight [kg]
160 PTP-L-RR	77905617	LONG	8,4	19	128	9	0.01	13
200 PTP-L-RR	77905621	LONG	10,2	30	194	9	0.02	23

PTP-RR			160	200
	A	mm	160	200
	A1	mm	160	200
	B(Ø)	mm	205	255
	C	mm	125	160
	D1(Ø)	mm	M10	M12
	D2 (Øf7)	mm	12	14
	D4 (Øjs7)	mm	13	16
	E	mm	53	73
	E1	mm	73	92
	F	mm	G1/8"	G1/8"
	G	mm	99	127
	H	mm	89,7	97
	H1	mm	86	93
	H2	mm	18	18
	J	mm	75	94
	J1	mm	108	144
	J2	mm	146	166
	M2	mm	40	50
	M3	mm	50	65
	M4	mm	59	72,8
	M5	mm	41	52,9
	M6	mm	30,7	39,5
	M7	mm	62,9	80,9
	M8	mm	4,9	9,4
	M9	mm	69,8	89,5
	M10	mm	5	8
	M11	mm	52	60
	P	mm	4	5
	P1	mm	6	6
	Q	mm	18	20
Min/max (long stroke)	R1	mm	82.5/90.9	102.5/112.7
Min/max (long stroke)	R2	mm	26/42.8	30/50.4
	S	mm	18	20
Long stroke	U	mm	8.4	10.2
	f	mm	19	19
	f1	mm	22	22
	h	mm	25	35
	n (H6)	mm	23	38
Lubrication fitting	p1	mm	M4	M4
	p2 (øH7)	mm	8x14	8x14
Pneumatic open/close- stroke control m.Jaws or air purge	p3	mm	M4	M4
Vise close	p4	mm	M4	M4
Vise open	p5	mm	M4	M4
Air sensing connection	p9	mm	M4	M4
Air sensing outlet (under front plate)	p10	mm	M4	M4

PTH-L-RR

PROTECTED HYDRAULIC TWIN VISE WITH QUICK CHANGE

- Quick jaws change
- Pneumatic open/close control (stroke control) master jaws valve
- Hydraulic version
- PTH-L-RR: Long stroke

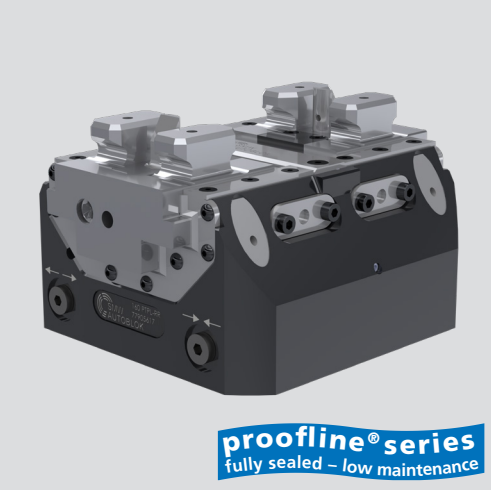

Application/customer benefits

- Compact design
- Master jaws guide protected against swarf and chips
- Highest repeatability
- Highest rigidity
- Linear pressure adjustmen
- Quick jaws change

Technical features

- Housing and functional parts hardened for high precision and long life
- Ready for air purge
- Ready for central grease lubrication
- Quick jaw change master jaw
- OD and ID clamping
- Pneumatic open/close control (stroke control) master jaws valve
- Air sensing
- Lubrication with SMW-Autoblok K67 grease
- Stroke control via proximity switches

Standard equipment

Self-centering vise without top jaws
All bolts and centering bushings included

Gripping force diagrams

PTH-L-RR 160 200 250

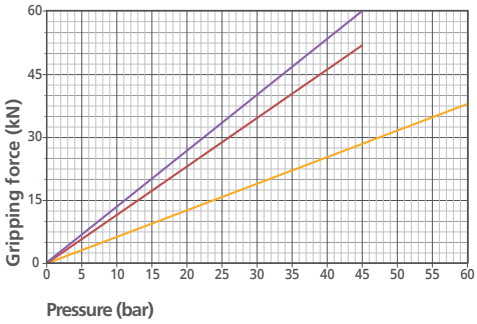

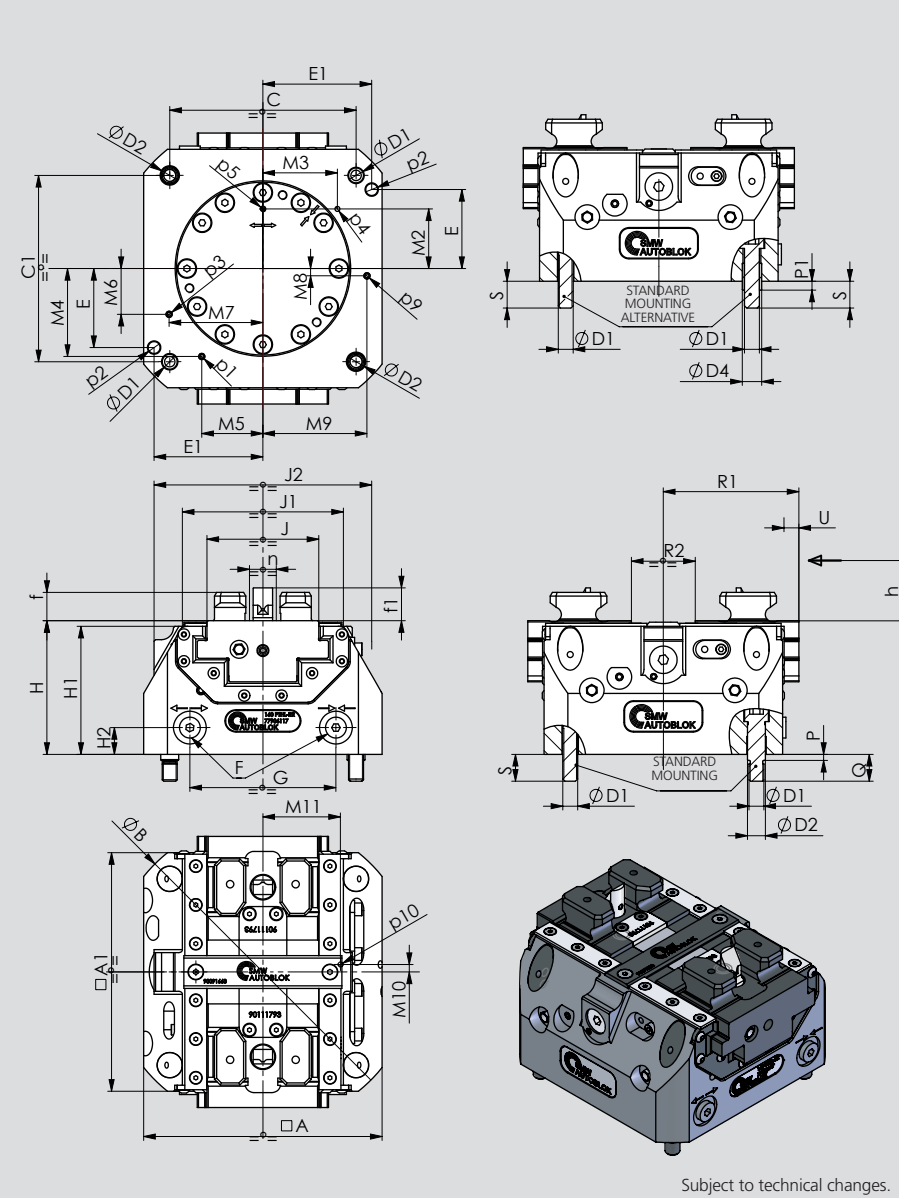

Subject to technical changes.

- Quick jaws change
- Pneumatic open/close control (stroke control) master jaws valve
- Hydraulic version
- PTH-L-RR: Long stroke

PTH-L-RR

PROTECTED HYDRAULIC TWIN VISE WITH QUICK CHANGE

Type	Id.No.	Stroke type	Stroke/jaw [mm]	Max clamping force [kN]	Piston area [cm²]	Max. Operating pressure [bar]	Repeatability [mm]	Weight [kg]
160 PTH-L-RR	77905617	LONG	8,4	19	128	60	0.01	15
200 PTH-L-RR	77905621	LONG	10,2	30	194	45	0.02	25
250 PTH-L-RR	77905621	LONG	15	60	113	45	0.02	35

PTH-RR			160	200	250
	A	mm	160	200	210
	A1	mm	160	200	238
	B(Ø)	mm	205	255	300
	C	mm	125	160	180
	C1	mm	125	160	200
	D1(Ø)	mm	M10	M12	M12
	D2 (Øf7)	mm	12	14	14
	D4 (Øjs7)	mm	13	16	16
	E	mm	53	73	80
	E1	mm	73	92	90
	F	mm	G1/8"	G1/8"	G1/8"
	G	mm	98	128	90
	H	mm	89,7	97	105
	H1	mm	86	93	100
	H2	mm	18	18	20
	J	mm	75	94	125
	J1	mm	108	144	180
	J2	mm	146	166	-
	M2	mm	40	50	80
	M3	mm	50	65	45
	M4	mm	59	72,8	89,8
	M5	mm	41	52,9	65,2
	M6	mm	30,7	39,5	0
	M7	mm	62,9	80,9	92
	M8	mm	4,9	9,4	6,7
	M9	mm	69,8	89,5	76,7
	M10	mm	5	8	9
	M11	mm	52	60	78
	P	mm	4	5	5
	P1	mm	6	6	6
	Q	mm	18	20	20
Min/max (long stroke)	**R1**	mm	82.5/90.9	102.5/112.7	119.5/134.5
Min/max (long stroke)	**R2**	mm	26/42.8	30/50.4	39/69
	S	mm	18	20	20
Long stroke	**U**	mm	8.4	10.2	15
	f	mm	19	19	19
	f1	mm	22	22	22
	h	mm	25	35	40
	n (H6)	mm	23	38	48
Lubrication fitting	**p1**	mm	M5	M5	M5
	p2 (øH7)	mm	8x14	8x14	10x20
Pneumatic open/close- stroke control m.Jaws or air purge	**p3**	mm	M5	M5	M5
Vise close	**p4**	mm	M4	M4	M5
Vise open	**p5**	mm	M4	M4	M5
Air sensing connection	**p9**	mm	M5	M5	M5
Air sensing outlet (under front plate)	**p10**	mm	M4	M4	M5

PTP / PTH

Protected pneumatic and hydraulic Twin Vises

- Mounting instructions
- also for the RR version

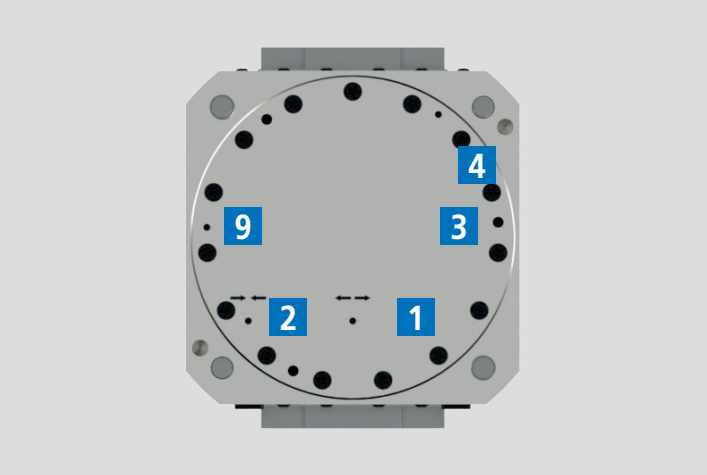

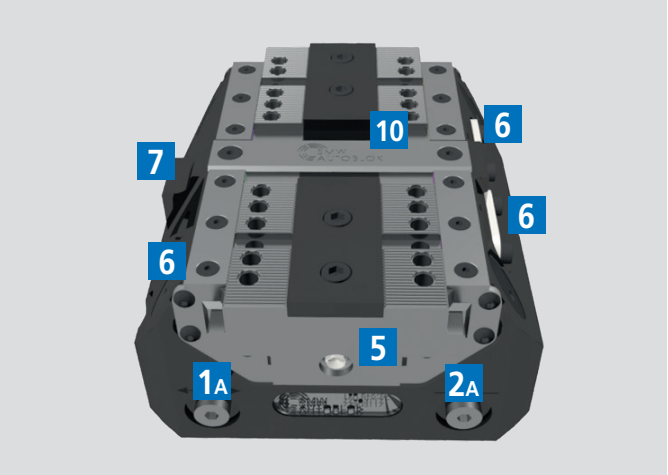

SOLUTION 1 STANDARD

± 0.03 mm to clamping center

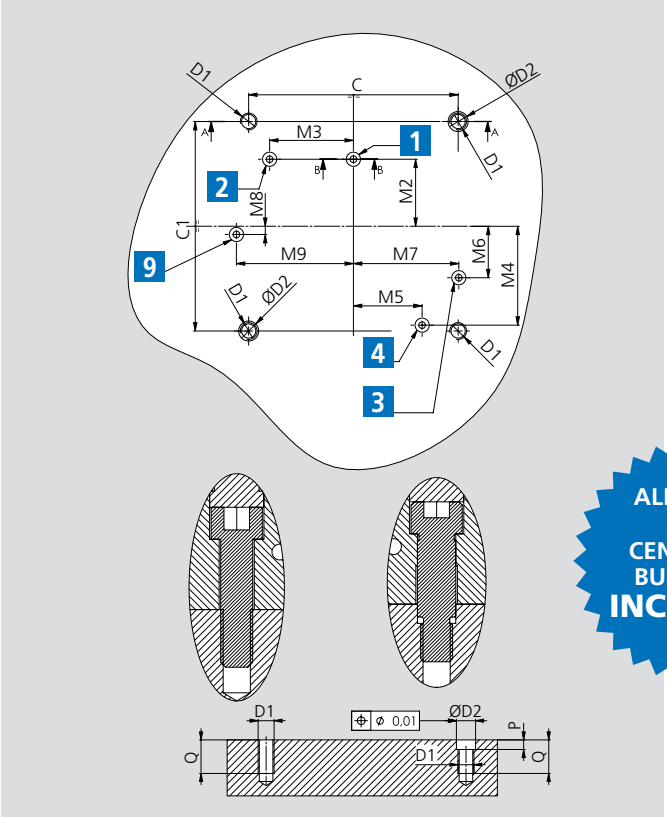

SOLUTION 2 STANDARD

± 0.025 mm to clamping center

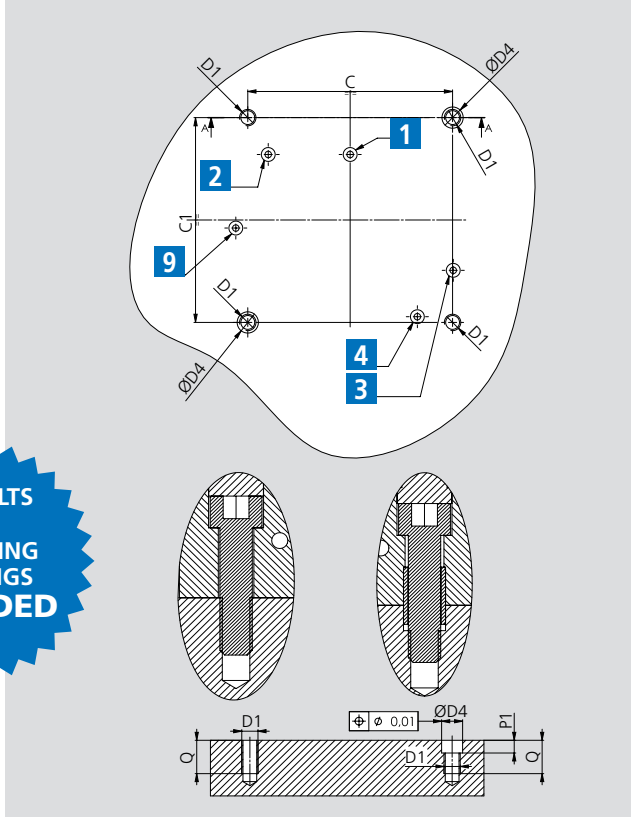

ALL BOLTS AND CENTERING BUSHINGS INCLUDED

FEEDING SEATS: OBLIGATED EXECUTION

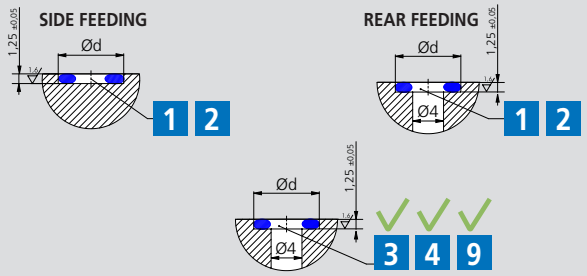

1	Open-Rear feeding	2	Closed-Rear feeding	3	Pneumatic open / close stroke control or air purge connection*
1A	Open-Side feeding	2A	Closed-Side feeding	4	Central lubrication
5	Lubrication fitting	6	Proximity switch seats	7	Pneumatic open/close -stroke control-m.j.valve (optional)
9	Air sensing connection (only bottom)	10	Air sensing outlet (under front plate)		

*The air purge can be used only without the valve.

PT	C	C1	D1	D2H7	D4H7	M2	M3	M4	M5	M6	M7	M8	M9	P	P1	Q	Ød	OR
100	80	80	M8	10	11	32	29.5	34.2	27.7	14.2	41.1	7	43	6	6	18	8	OR2018
125	100	100	M8	10	11	32	29.5	40.5	38.5	10.6	54.5	4.8	55.3	6	6	18	8	OR2018
160	125	125	M10	12	13	40	50	59	41	30.7	62.9	4.9	69.8	6	7	21	8	OR2018
200	160	160	M12	14	16	50	65	72.8	52.9	39.5	80.9	9.4	89.5	7	7	24	8.8	OR2021
250	180	200	M12	14	16	80	45	89.8	65.2	0	92	6.7	76.7	7	7	24	8.8	OR2021

Notes

STV-2N / STV-2L

Spring and air operated Twin Vise

- Protected and springs clamping
- Pneumatic open / close control (stroke control) master jaws valve
- 2 Jaws
- STV-2N: Normal stroke
- STV-2L: Long stroke

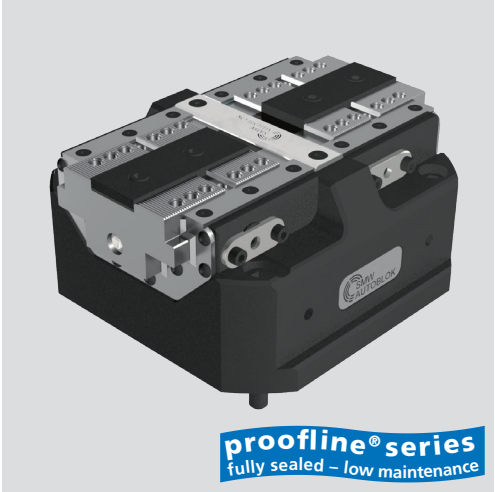

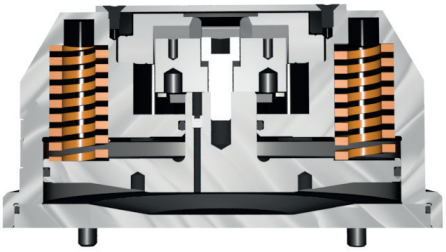

Application/customer benefits

- Compact design
- Linear pressure adjustment
- Highest repeatability
- Highest rigidity

Technical features

- Spring to clamp, pneumatic open
- Protected 1
- Increase of the clamping force via Turbo function
- Housing and functional parts hardened for high precision and long life
- Ready for air purge
- Master jaws with both tongue & groove and fine serration 1.5 mm x 60°
- OD clamping only
- Safety valve SAB-1 2 to maintain air pressure during pallet transportation / storage and machining without feed (optional)
- Pneumatic open / close control (stroke control) master jaws valve (optional)
- Lubrication with SMW-AUTOBLOK K67 grease
- Stroke control via proximity switches (optional)
- Air sensing

Standard equipment

Self-centering vise without top jaws
All bolts and centering bushings included

ROTATION USE
The vise can be used up to maximum 500 rpm only if operated with springs + Turbo system (at minimum 3 bar) and with top jaws weight not higher than the standard ones.

Gripping force diagrams

STV-2N	225	180	125
STV-2L	225	180	125

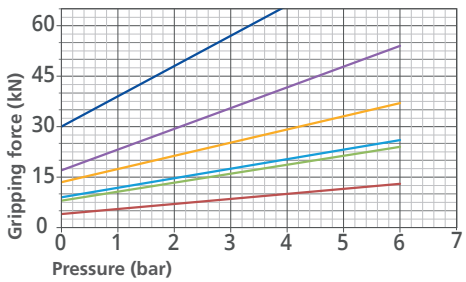

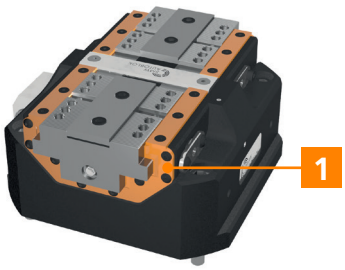

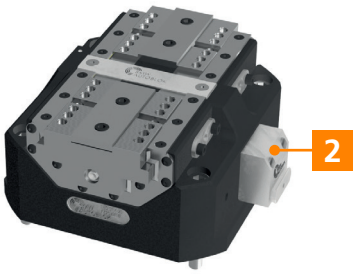

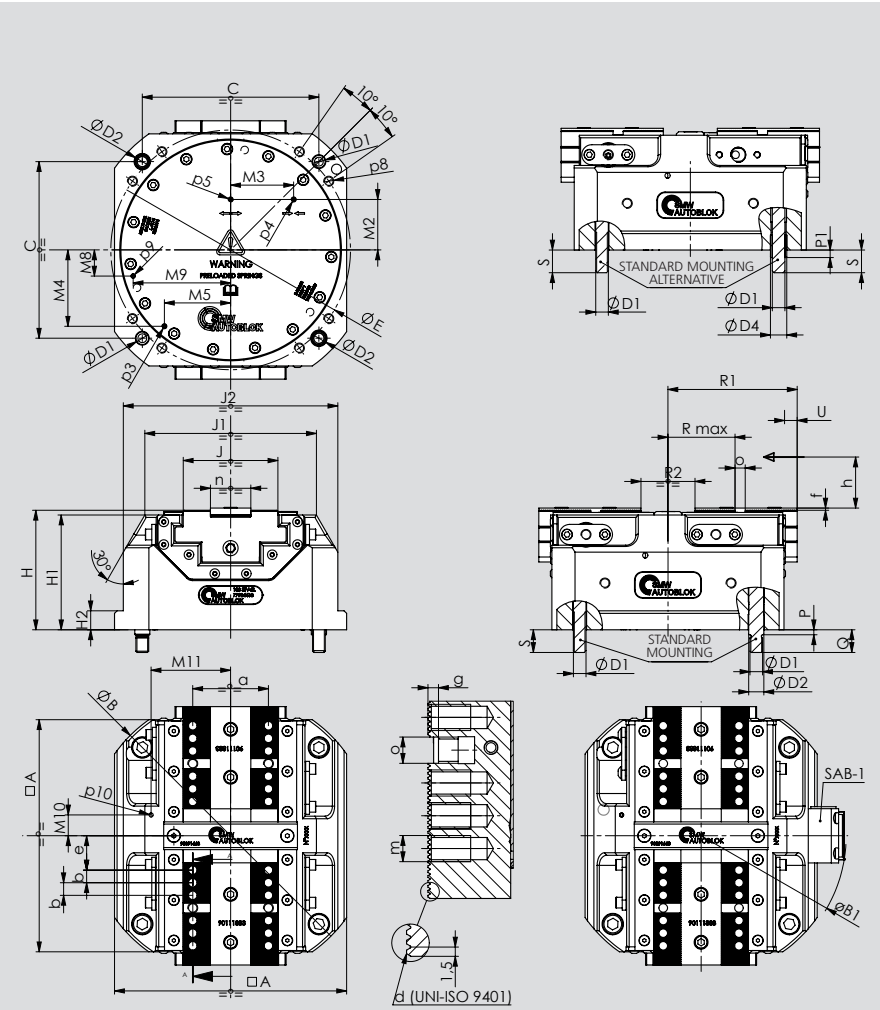

Subject to technical changes.

STV-2N / STV-2L

- Protected and springs clamping
- Pneumatic open / close control (stroke control) master jaws valve
- 2 jaws
- STV-2N: Normal stroke
- STV-2L: Long stroke

SPRING AND AIR OPERATED SPRING VISE

Type	Id. No.	Type stroke	Max. Clamping force middle stroke [kN]		Piston area [cm]	Re-opening pressure [bar]	Operating pressure max. [bar]	Min. / max. Operating pressure [bar]	Repeatability [mm]	Weight [kg]
			Only springs	Springs + Turbo						
125 STV-2N	77904312	NORMAL	9	26	78	5	6	-	0.01	7
125 STV-2L	77904412	LONG	4	13						
180 STV-2N	77904318	NORMAL	17	54	170	5	6	-	0.01	17.5
180 STV-2L	77904418	LONG	8	24						
225 STV-2N	77904322	NORMAL	30	66	250	6	4	-	0.02	28
225 STV-2L	77904422	LONG	13.5	37			6	-		
125 STV-2N + SAB-1	77904812*	NORMAL	-	-	-	-	-	3.5 / 6	-	-
125 STV-2L + SAB-1	77904912*	LONG	-	-	-	-	-	3.5 / 6	-	-
180 STV-2N + SAB-1	77904818*	NORMAL	-	-	-	-	-	3.5 / 6	-	-
180 STV-2L + SAB-1	77904918*	LONG	-	-	-	-	-	3.5 / 6	-	-
225 STV-2N + SAB-1	77904822*	NORMAL	-	-	-	-	-	3.5 / 4	-	-
225 STV-2L + SAB-1	77904922*	LONG	-	-	-	-	-	3.5 / 6	-	-

* Id. No. Twin Vise included the SAB-1. For example, 77904812 is composed by 125STV-2N Id. No. 77904312 plus SAB-1 Id. No. 27581810

STV-2			125	180	225
	A	mm	125	184	225
	B (Ø)	mm	162	225	284
SAB-1 valve overall dimension	**B1 (Ø)**	mm	186	230	276
	C	mm	100	140	180
	D1(Ø)	mm	M8	M10	M12
	D2 (Øf7)	mm	10	12	14
	D4 (Øjs7)	mm	11	13	16
	E (ø)	mm	136	190	240
	H	mm	80.5	94.7	102
	H1	mm	77	91	98
	H2	mm		15	15
	J	mm	47	75	94
	J1	mm	100	136	172
	J2	mm	125	170	216
	M2	mm	32	40	50
	M3	mm	29.5	50	65
	M4	mm	40.5	60.5	79
	M5	mm	38.5	52.5	63
	M8	mm	10.6	20.7	15
	M9	mm	54.5	77.3	99.9
	M10	mm	10.5	16.5	15
	M11	mm	46	63	81
	P	mm	4	4	5
	P1	mm	4	6	6
	Q	mm	15	18	20
Min. / max. (long stroke)	**R max**	mm	25.6 / 31.6	44.8 / 53.2	54.5 / 64.7
Min. / max. (normal stroke)	**R max**	mm	25.4 / 28	45 / 48	54.5 / 58.7
Min. / max. (long stroke)	**R1**	mm	64.5 / 70.5	94 / 102.4	114.5 / 124.7
Min. / max. (normal stroke)	**R1**	mm	64.4 / 67	94.5 / 97.5	114.8 / 119
Min. / max. (long stroke)	**R2**	mm	20 / 32	26 / 42.8	30 / 50.4
Min. / max. (normal stroke)	**R2**	mm	19.8 / 25	26 / 32	30.6 / 39
	S	mm	15	18	20
Long stroke	**U**	mm	6	8.4	10.2
Normal stroke	**U**	mm	2.6	3	4.2
	a	mm	35	60	80
	b	mm	7	10	10
Serration	**d**	mm	1.5 x 60°	1.5 x 60°	1.5 x 60°
Min. / max. (long stroke)	**e**	mm	14.6 / 20.6	18.8 / 27.2	28.5 / 38.7
Min. / max. (normal stroke)	**e**	mm	14.4 / 17	19 / 22	28.5 / 32.7
	f	mm	1.8	1.8	2
	g	mm	2.7	3.2	4
	h	mm	16	25	35
	m	mm	M6x10	M8x12	M8x12
	n (g6)	mm	20	32	40
	o (H7)	mm	6	8	8
Pneumatic open / close stroke control or air purge	**p3**	mm	M4	M4	M4
Vise closed	**p4**	mm	M4	M4	M4
Vise open	**p5**	mm	M4	M4	M4
	p8	mm	M6x12	M8x16	M10x18
	p9	mm	M4	M4	M4
	p10	mm	M4	M4	M4

STV-3N / STV-3L

SPRING AND AIR OPERATED TWIN VISE

- Protected and springs clamping
- Pneumatic open / close control (stroke control) master jaws valve
- 3 Jaws
- STV-3N: Normal stroke
- STV-3L: Long stroke

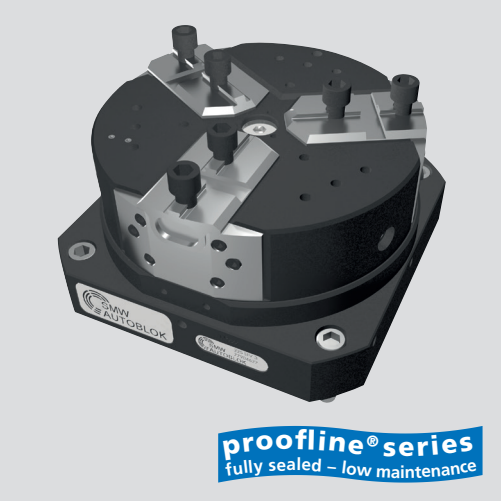

Application/customer benefits

- Compact design
- Master jaws guide protected against swarf and chips
- Highest repeatability
- Highest rigidity

Technical features

- Spring to clamp, pneumatic open
- Protected 1
- Increase of the clamping force via Turbo function
- Housing and functional parts hardened for high precision and long life
- Ready for air purge
- 3 jaw interfaces: Tongue & groove
- OD clamping only
- Safety valve SAB-1 2 to maintain air pressure during pallet transportation / storage and machining without feed (optional)
- Pneumatic open / close control (stroke control) master jaws valve (optional)
- Lubrication with SMW-AUTOBLOK K67 grease

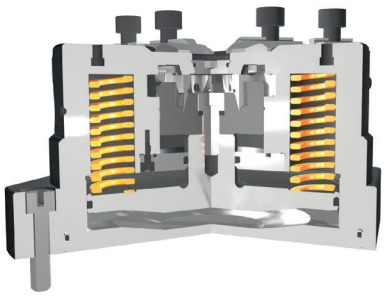

Standard equipment

Self-centering vise without top jaws
All bolts and centering bushings included

ROTATION USE
The vise can be used up to max 1000 rpm (standard stroke version) and max 800 rpm (long stroke version) only if operated with springs + Turbo system (at minimum 3 bar) and with top jaws weight not higher than the standard ones.

Gripping force diagrams

STV-3N ■225 ■180
STV-3L ■225

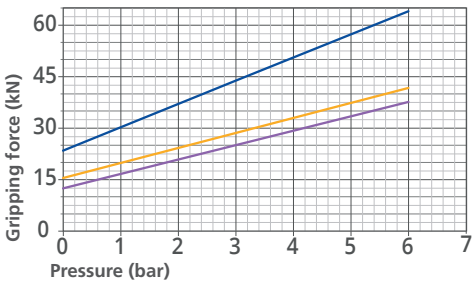

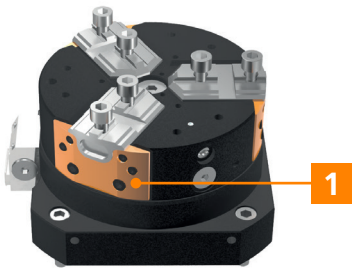

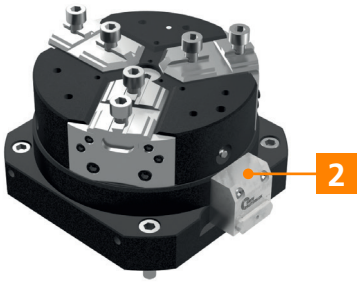

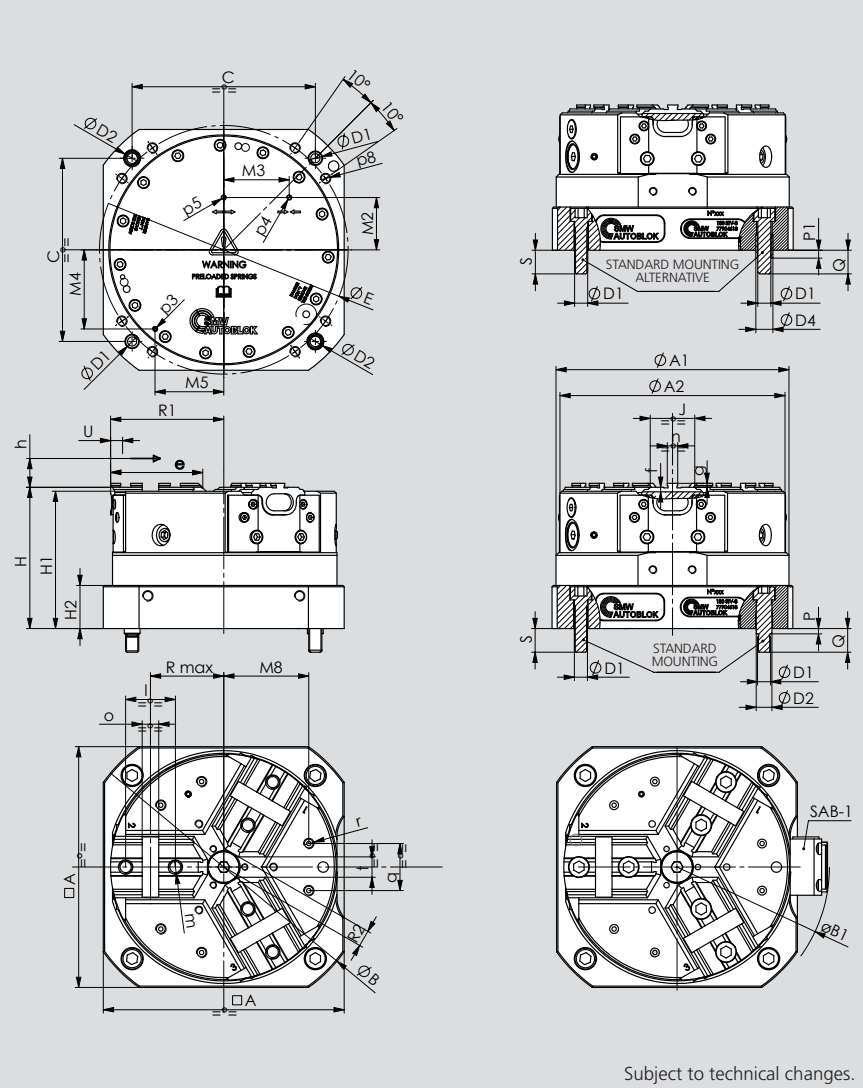

Subject to technical changes.

STV-3N / STV-3L

- Protected and springs clamping
- Pneumatic open / close control (stroke control) master jaws valve
- 3 Jaws
- STV-3N: Normal stroke
- STV-3L: Long stroke

SPRING AND AIR OPERATED TWIN VISE

Type	Id. No.	Stroke type	Max. clamping force middle stroke [kN]		Stroke / jaw [mm]	Piston area [cm²]	Re-opening pressure [bar]	Max. operating pressure [bar]	Min. / max. operating pressure [bar]	Weight [kg]
			Only springs	Springs + Turbo						
180 STV-3N	77904618	NORMAL	13	38	3.8	170	5	6	-	18
225 STV-3N	77904622	NORMAL	24	64	4.2	250	6	6	-	29.5
225 STV-3L	77904722	LONG	16	42	8	250	6	6	-	29.5
180 STV-3N + SAB-1	77905018*	NORMAL	-	-	-	-	-	-	3.5 / 6	-
225 STV-3N + SAB-1	77905022*	NORMAL	-	-	-	-	-	-	3.5 / 6	-
225 STV-3L + SAB-1	77905122*	LONG	-	-	-	-	-	-	3.5 / 6	-

* Id. No. Twin Vise included the SAB-1. For example, 77905018 is composed by 180STV-3N Id. No. 77904618 plus SAB-1 Id. No. 27581810

STV-3			180	225
	A	mm	184	225
	A1	mm	178	222
	A2	mm	172	216
	B (Ø)	mm	225	284
SAB-1 valve overall dimension	B1 (Ø)	mm	233	276
	C	mm	140	180
	D1(Ø)	mm	M10	M12
	D2 (Øf7)	mm	12	14
	D4 (Øjs7)	mm	13	16
	E (ø)	mm	190	240
	H	mm	108	115
	H1	mm	105	112
	H2	mm	33	38
	J	mm	34	46
	M2	mm	40	50
	M3	mm	50	65
	M4	mm	60.5	79
	M5	mm	52.5	63
	M8	mm	65	80
	P	mm	4	5
	P1	mm	6	6
	Q	mm	18	20
Min. / max. (normal stroke)	R max	mm	52.2 / 56	67.8 / 72
Min. / max. (normal stroke)	R1	mm	82.7 / 86.5	103.8 / 108
Min. / max. (normal stroke)	R2	mm	8.7 / 12.5	12.8 / 17
Min. / max. (long stroke)	R max	mm	/	68 / 76
Min. / max. (long stroke)	R1	mm	/	104.5 / 112.5
Min. / max. (long stroke)	R2	mm	/	9 / 17
	S	mm	18	20
Normal stroke	U	mm	3,8	4.2
Long stroke	U	mm	/	8
	e	mm	70	87
	f	mm	3.5	3.5
	g	mm	3	3
	h	mm	25	35
	l	mm	38	44.4
	m	mm	M10x12	M12x14
	n (h8)	mm	7.94	7.94
	o (H7)	mm	12.68	12.68
Pneumatic open / close stroke control or air purge	p3	mm	M4	M4
Vise closed	p4	mm	M4	M4
Vise open	p5	mm	M4	M4
	p8	mm	M8x16	M10x18
	q	mm	36	45
	r	mm	M8x10	M8x10
Min. / max. (normal stroke)	t	mm	9 / 15.6	13.5 / 20.9
Min. / max. (long stroke)	t	mm	/	6.8 / 20.9

STV

Spring and air operated Twin Vise

■ Mounting instructions

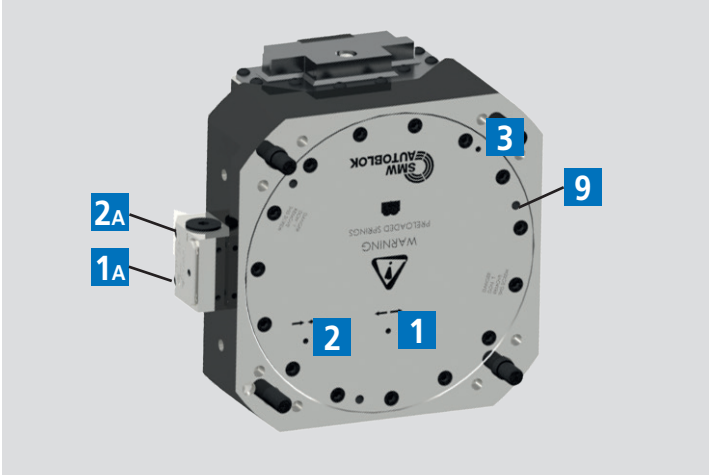

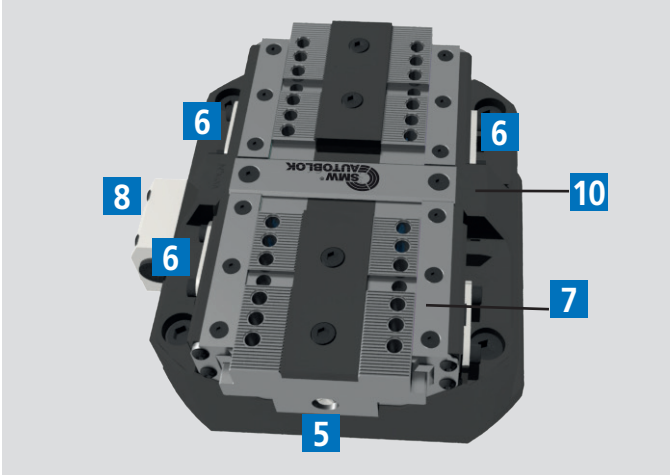

SOLUTION 1 STANDARD

± 0,03 mm to clamping center

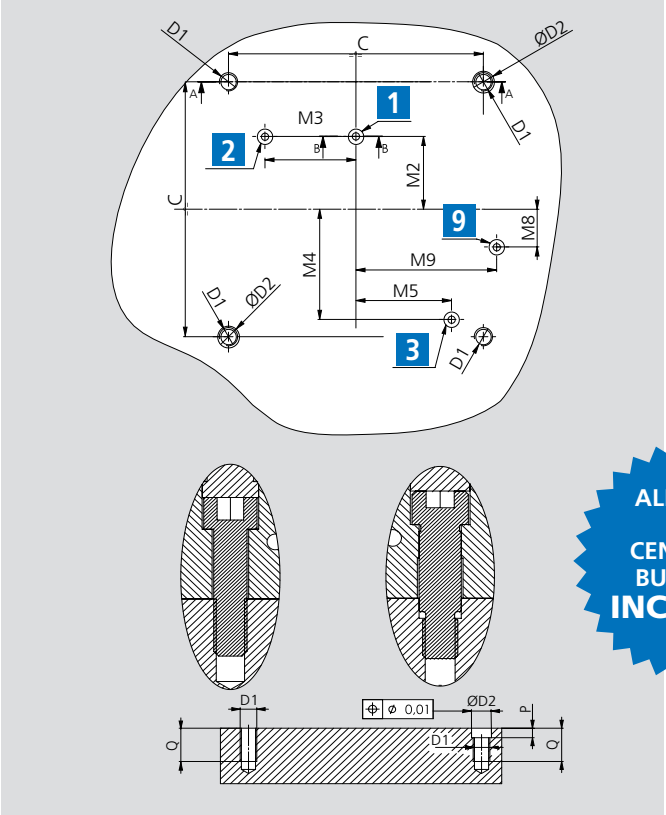

ALL BOLTS AND CENTERING BUSHINGS **INCLUDED**

SOLUTION 2 STANDARD

± 0,025 mm to clamping center

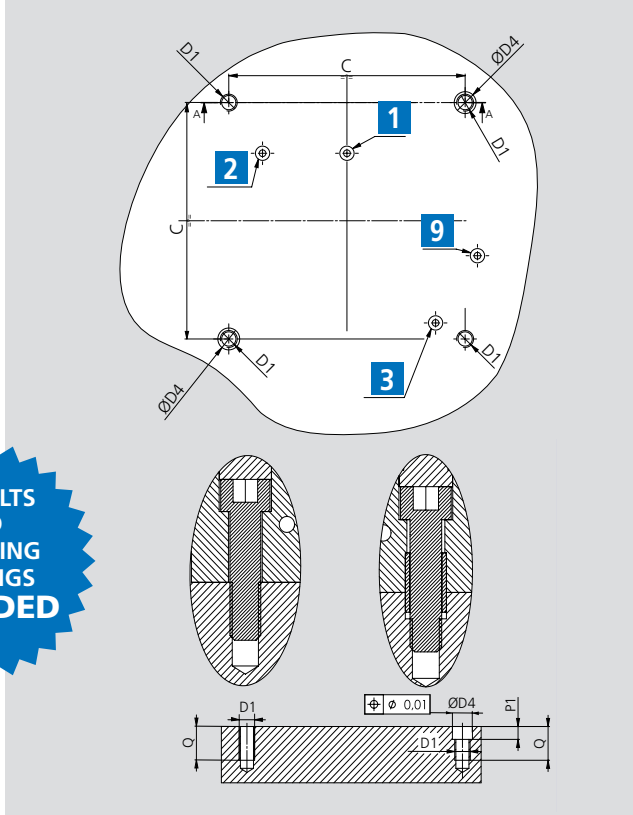

FEEDING SEATS: OBLIGATED EXECUTION

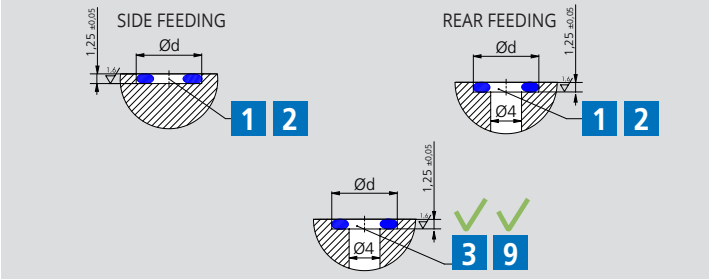

1	Open-Rear feeding	2	Closed-Rear feeding	3	Pneum.open close stroke control or Air purge*
1A	Open-Side feeding	2A	Closed-Side feeding	5	Lubrication fitting
6	Proximity switches seats	7	Pneumatic open / close stroke control valve (optional)	8	Safety valve SAB-1 (optional)
9	Air sensing connection** (only bottom)	10	Air sensing outlet** (under front plate)		

* The air purge can be used only without the valve.
** Points 9 and 10 only available on STV-2.

STV	C	D1	D2H7	D4H7	M2	M3	M4	M5	M8	M9	P	P1	Q	Ød	OR
125	100	M8	10	11	32	29.5	40.5	38.5	10.6	54.5	6	6	18	8	OR2018
180	140	M10	12	13	40	50	60.5	52.5	20.7	77.3	6	7	21	8.8	OR2021
225	180	M12	14	16	50	65	79	63	15	99.9	7	7	24	8.8	OR2021

Notes

TVP-N/TVP-L/TVP-F

PNEUMATIC TWIN VISE

- TVP-N: Normal stroke
- TVP-L: Long stroke
- TVP-F: One fixed jaw

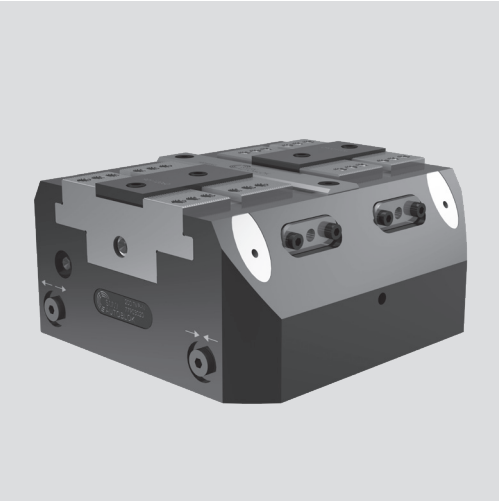

Application/customer benefits

- Compact design
- Linear pressure adjustment
- Highest repeatability
- Highest rigidity

Technical features

- H7 quality pilot bore (see p2 below)
- Housing and functional parts hardened for high precision and long life
- Ready for air purge
- Ready for central grease lubrication
- Master jaws with both tongue & groove and fine serration 1.5 mm x 60°
- OD and ID clamping
- Lubrication with SMW-AUTOBLOK K67 grease
- Stroke control via proximity switches (optional)

Standard equipment

Self-centering vise without top jaws
All bolts and centering bushings included

Gripping force diagrams

TVP-N 100 160 200 250 315

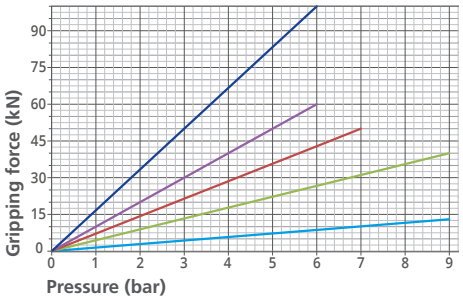

TVP-L 100 160 200 250 315

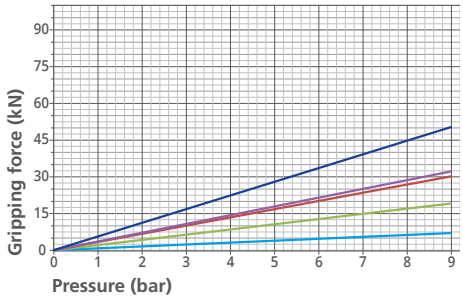

TVP-F 100 160 200 250 315

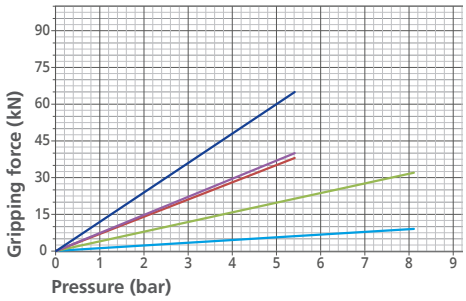

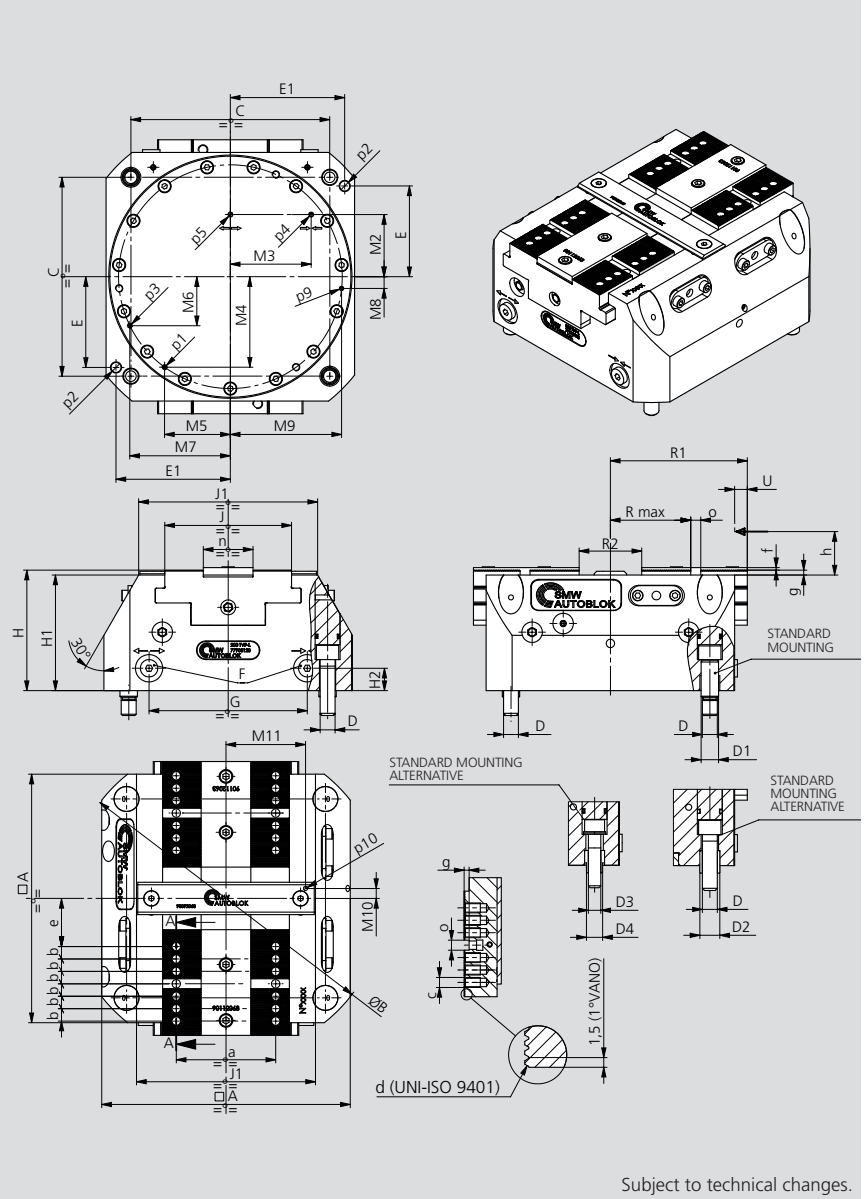

Subject to technical changes.

TVP-N/TVP-L/TVP-F

- TVP-N: Normal stroke
- TVP-L: Long stroke
- TVP-F: One fixed jaw

PNEUMATIC TWIN VISE

Type	Id. No.	Stroke type	Max. clamping force [kN]	Stroke / jaw [mm]	Operating pressure [bar]	Repeatability [mm]	Weight [kg]
100 TVP-N	77903010	NORMAL	13	2.6	9	0.01	4.3
100 TVP-L	77903110	LONG	7	6	9	0.01	4.3
100 TVP-F	77903210	FIXED JAW	9	6	9	0.01	4.3
160 TVP-N	77903016	NORMAL	40	3	9	0.01	13
160 TVP-L	77903116	LONG	19	8.4	9	0.01	13
160 TVP-F	77903216	FIXED JAW	32	8.4	9	0.01	13
200 TVP-N	77903020	NORMAL	50	4.2	7	0.02	23
200 TVP-L	77903120	LONG	30	10.2	9	0.02	23
200 TVP-F	77903220	FIXED JAW	38	10.2	6	0.02	23
250 TVP-N	77903025	NORMAL	60	5.3	6	0.02	39
250 TVP-L	77903125	LONG	32	15	9	0.02	39
250 TVP-F	77903225	FIXED JAW	40	15	6	0.02	39
315 TVP-N	77903031	NORMAL	100	6.4	6	0.03	84
315 TVP-L	77903131	LONG	50	18	9	0.03	84
315 TVP-F	77903231	FIXED JAW	65	18	6	0.03	84

TVP			100	160	200	250	315
	A	mm	100	160	200	250	315
	B(Ø)	mm	132	205	255	314	394
	C	mm	80	125	160	200	250
	D(Ø)	mm	M8x15	M10x18	M12x20	M12x20	M16x23
	D1 (Øf7)	mm	10x4	12x4	14x5	14x5	18x6
	D2 (Øjs7)	mm	11x4	13x6	16x6	16x6	21x6
	D3	mm	-	-	M10x18	-	-
	D4 (Øjs7)	mm	-	-	13x6	-	-
	E	mm	32	53	73	77	105
	E1	mm	45	73	92	115	140
	F	mm	M5	G1/8"	G1/8"	G1/8"	G1/8"
	G	mm	59.3	99	127.3	157	200.8
	H	mm	75.5	89.7	97	105	139
	H1	mm	72	86	93	100	133
	H2	mm	15	18	18	20	25
	J	mm	47	75	102	125	160
	J1	mm	72	108	144	180	230
	M2	mm	32	40	50	64	80
	M3	mm	29.5	50	65	75	90
	M4	mm	34.2	59	72.8	89.8	117.7
	M5	mm	27.7	41	52.9	65.2	79.4
	M6	mm	14.2	30.7	39.5	48.7	57.8
	M7	mm	41.1	62.9	80.9	99.8	129.7
	M8	mm	8.3	4.9	9.4	11.6	12.4
	M9	mm	42.7	69.8	89.5	110.4	141.5
	M10	mm	5	5	8	11	12
	M11	mm	34	52	64	78	102
Lubrication	**p1**	mm	M4	M4	M4	M5	M5
	p2 ØH7	mm	6x14	8x14	8x14	10x20	12x20
Air purge	**p3**	mm	M4	M4	M4	M5	M5
Vise closed	**p4**	mm	M4	M4	M4	M5	M5
Vise open	**p5**	mm	M4	M4	M4	M5	M5
Air sensing connection	**p9**	mm	M4	M4	M4	M5	M5
Air sensing outlet	**p10**	mm	M4	M4	M4	M6	M6
Min. / max. (long stroke)	**R2**	mm	20 / 32	26 / 42.8	30 / 50.4	39 / 69	50 / 86
Min. / max. (long stroke)	**R1**	mm	50 / 56	82.5 / 90.9	100 / 110.2	119.5 / 134.5	151.5 / 169.5
Min. / max. (long stroke)	**Rmax**	mm	25.6 / 31.6	44.8 / 53.2	54.5 / 64.7	51.5 / 66.5	81.5 / 99.5
Min. / max. (normal stroke)	**R2**	mm	19.8 / 25	26 / 32	30.6 / 39	34.4 / 45	49.2 / 62
Min. / max. (normal stroke)	**R1**	mm	47.4 / 50	82.5 / 85.5	95.8 / 100	119.7 / 125	151.1 / 157.5
Min. / max. (normal stroke)	**Rmax**	mm	25.4 / 28	45 / 48	54.5 / 58.7	55.7 / 61	87.1 / 93.5
Min. / max. (fixed jaw)	**R2**	mm	20 / 26	26 / 34.4	30 / 40.2	39 / 54	56 / 74
Min. / max. (fixed jaw)	**R1**	mm	50 / 56	82.5 / 90.9	100 / 110.2	119.5 / 134.5	151.5 / 169.5
Min. / max. (fixed jaw)	**Rmax**	mm	25.6 / 31.6	44.8 / 53.2	54.5 / 64.7	51.5 / 66.5	81.5 / 99.5
Long stroke	**U**	mm	6	8.4	10.2	15	18
Normal stroke	**U**	mm	2.6	3	4.2	5.3	6.4
Fixed jaw stroke	**U**	mm	6	8.4	10.2	15	18
	a	mm	35	60	80	90	120
	b	mm	7	10	10	12	15
	c	mm	M6x10	M8x12	M8x12	M10x15	M12x17
Serration	**d**	mm	1.5 x 60°	1.5 x 60°	1.5 x 60°	1.5 x 60°	1.5 x 60°
Min. / max. (normal stroke)	**e**	mm	14.4 / 17	19 / 22	28.5 / 32.7	24.7 / 30	33.1 / 39.5
Min. / max. (long stroke)	**e**	mm	14.6 / 20.6	18.8 / 27.2	28.5 / 38.7	32.5 / 47.5	42.5 / 60.5
Min. / max. (fixed jaw)	**e**	mm	14.6 / 20.6	18.8 / 27.2	28.5 / 38.7	32.5 / 47.5	42.5 / 60.5
	f	mm	1.8	1.8	2	2.5	2.5
	g	mm	2.7	3.2	4	4	4
	h	mm	16	25	35	40	40
	o (H7)	mm	6	8	8	10	12
	n (g6)	mm	20	32	40	50	60

TVH-N/TVH-L/TVH-F

HYDRAULIC TWIN VISE

- TVH-N: Normal stroke
- TVH-L: Long stroke
- TVH-F: One fixed jaw

Application/customer benefits

- Compact design
- Linear pressure adjustment
- Highest repeatability
- Highest rigidity

Technical features

- H7 quality pilot bore (see p2 below)
- Housing and functional parts hardened for high precision and long life
- Ready for air purge
- Ready for central grease lubrication
- Master jaws with both tongue & groove and fine serration 1.5 mm x 60°
- OD and ID clamping
- Lubrication with SMW-AUTOBLOK K67 grease
- Stroke control via proximity switches (optional)

Standard equipment

Self-centering vise without top jaws
All bolts and centering bushings included

Gripping force diagrams

TVH-N ■100 ■160 ■200

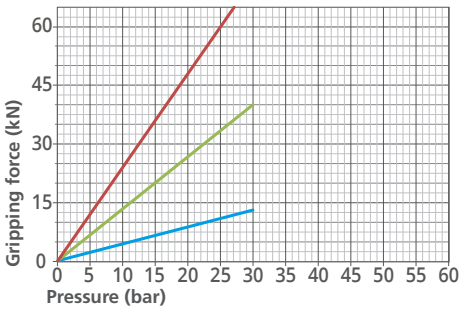

TVH-L ■100 ■160 ■200

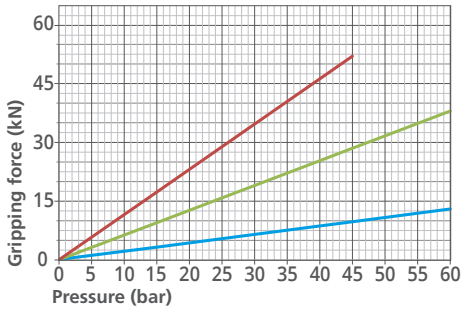

TVH-F ■100 ■160 ■200

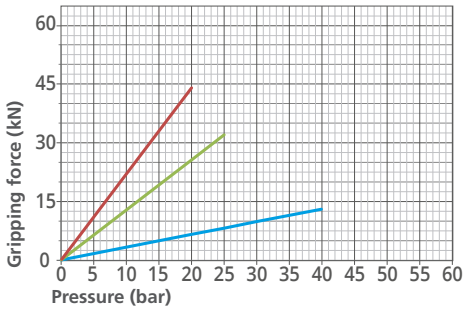

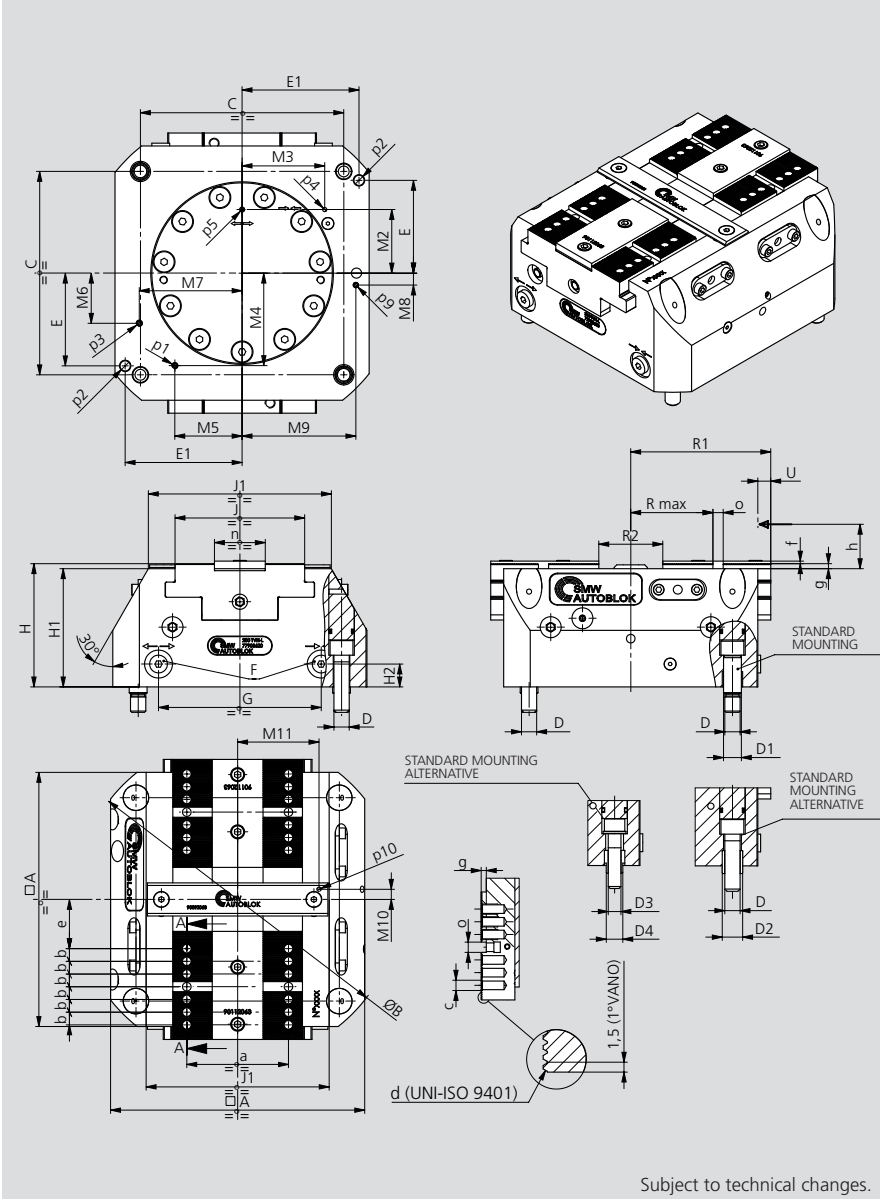

Subject to technical changes.

TVH-N/TVH-L/TVH-F

- TVH-N: Normal stroke
- TVH-L: Long stroke
- TVH-F: One fixed jaw

HYDRAULIC TWIN VISE

Type	Id. No.	Stroke type	Max. clamping force [kN]	Stroke / jaw [mm]	Max. operating pressure [bar]	Repeatability [mm]	Weight [kg]
100 TVH-N	77903510	NORMAL	13	2.6	30	0.01	4.5
100 TVH-L	77903610	LONG	13	6	60	0.01	4.5
100 TVH-F	77903710	FIXED JAW	13	6	40	0.01	4.5
160 TVH-N	77903516	NORMAL	40	3	30	0.01	14
160 TVH-L	77903616	LONG	38	8.4	60	0.01	14
160 TVH-F	77903716	FIXED JAW	32	8.4	25	0.01	14
200 TVH-N	77903520	NORMAL	60	4.2	25	0.02	25
200 TVH-L	77903620	LONG	52	10.2	45	0.02	25
200 TVH-F	77903720	FIXED JAW	44	10.2	20	0.02	25

TVH			100	160	200
	A	mm	100	160	200
	B(Ø)	mm	132	205	255
	C	mm	80	125	160
	D(Ø)	mm	M8x15	M10x18	M12x20
	D1 (Øf7)	mm	10x4	12x4	14x5
	D2 (Øjs7)	mm	11x4	13x6	16x6
	D3	mm	-	-	M10x18
	D4 (Øjs7)	mm	-	-	13x6
	E	mm	32	53	73
	E1	mm	45	73	92
	F	mm	G1/8"	G1/8"	G1/8"
	G	mm	55	98	128
	H	mm	75.5	89.7	97
	H1	mm	72	86	93
	H2	mm	15	18	18
	J	mm	47	75	102
	J1	mm	72	108	144
	M2	mm	32	40	50
	M3	mm	29.5	50	65
	M4	mm	34.2	59	72.8
	M5	mm	27.7	41	52.9
	M6	mm	14.2	30.7	39.5
	M7	mm	41.1	62.9	80.9
	M8	mm	8.3	4.9	9.4
	M9	mm	42.7	69.8	89.5
	M10	mm	5	5	8
	M11	mm	34	52	64
Lubrication	**p1**	mm	M4	M5	M5
	p2 ØH7	mm	6x14	8x14	8x14
Air purge	**p3**	mm	M4	M5	M5
Vise closed	**p4**	mm	M4	M4	M4
Vise open	**p5**	mm	M4	M4	M4
Air sensing connection	**p9**	mm	M4	M5	M5
Air sensing outlet	**p10**	mm	M4	M4	M4
Min. / max. (long stroke)	**R2**	mm	20 / 32	26 / 42.8	30 / 50.4
Min. / max. (long stroke)	**R1**	mm	50 / 56	82.5 / 90.9	100 / 110.2
Min. / max. (long stroke)	**Rmax**	mm	25.6 / 31.6	44.8 / 53.2	54.5 / 64.7
Min. / max. (normal stroke)	**R2**	mm	19.8 / 25	26 / 32	30.6 / 39
Min. / max. (normal stroke)	**R1**	mm	47.4 / 50	82.5 / 85.5	95.8 / 100
Min. / max. (normal stroke)	**Rmax**	mm	25.4 / 28	45 / 48	54.5 / 58.7
Min. / max. (fixed jaw)	**R2**	mm	20 / 26	26 / 34.4	30 / 40.2
Min. / max. (fixed jaw)	**R1**	mm	50 / 56	82.5 / 90.9	100 / 110.2
Min. / max. (fixed jaw)	**Rmax**	mm	25.6 / 31.6	44.8 / 53.2	54.5 / 64.7
Long stroke	**U**	mm	6	8.4	10.2
Normal stroke	**U**	mm	2.6	3	4.2
Fixed jaw stroke	**U**	mm	6	8.4	10.2
	a	mm	35	60	80
	b	mm	7	10	10
	c	mm	M6x10	M8x12	M8x12
Serration	**d**	mm	1.5 x 60°	1.5 x 60°	1.5 x 60°
Min. / max. (normal stroke)	**e**	mm	14.4 / 17	19 / 22	28.5 / 32.7
Min. / max. (long stroke)	**e**	mm	14.6 / 20.6	18.8 / 27.2	28.5 / 38.7
Min. / max. (fixed jaw)	**e**	mm	14.6 / 20.6	18.8 / 27.2	28.5 / 38.7
	f	mm	1.8	1.8	2
	g	mm	2.7	3.2	4
	h	mm	16	25	35
	o (H7)	mm	6	8	8
	n (g6)	mm	20	32	40

TVP / TVH

Standard Twin Vises

■ Mounting instructions

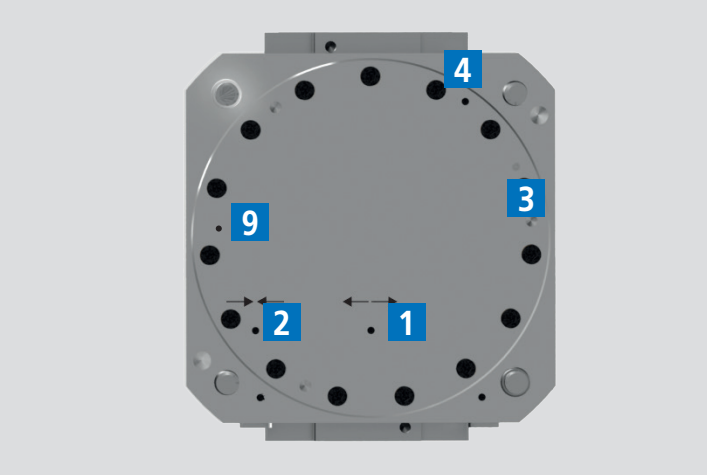

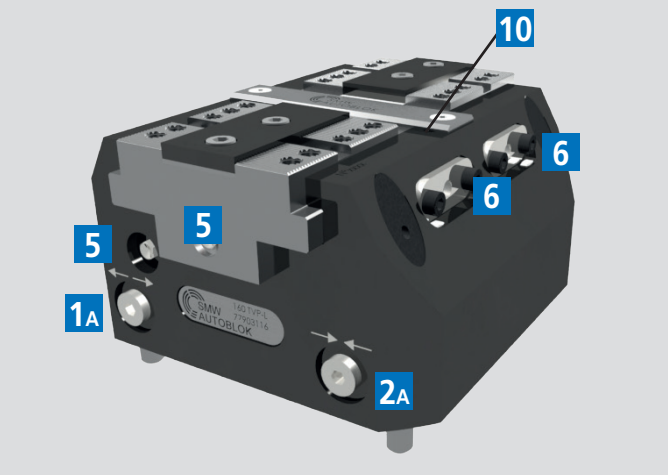

SOLUTION 1 STANDARD

± 0.03 mm to clamping center

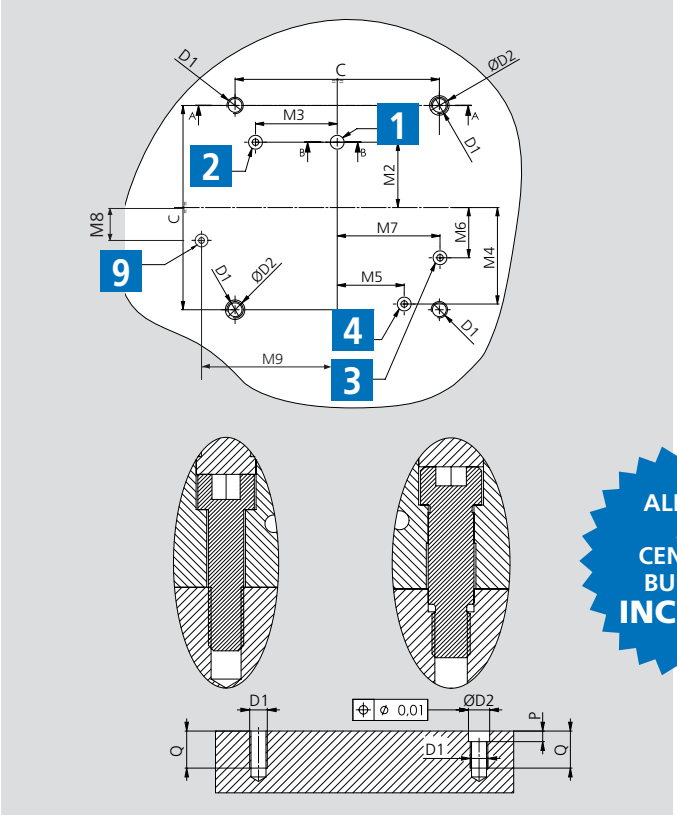

SOLUTION 2 STANDARD

± 0.025 mm to clamping center

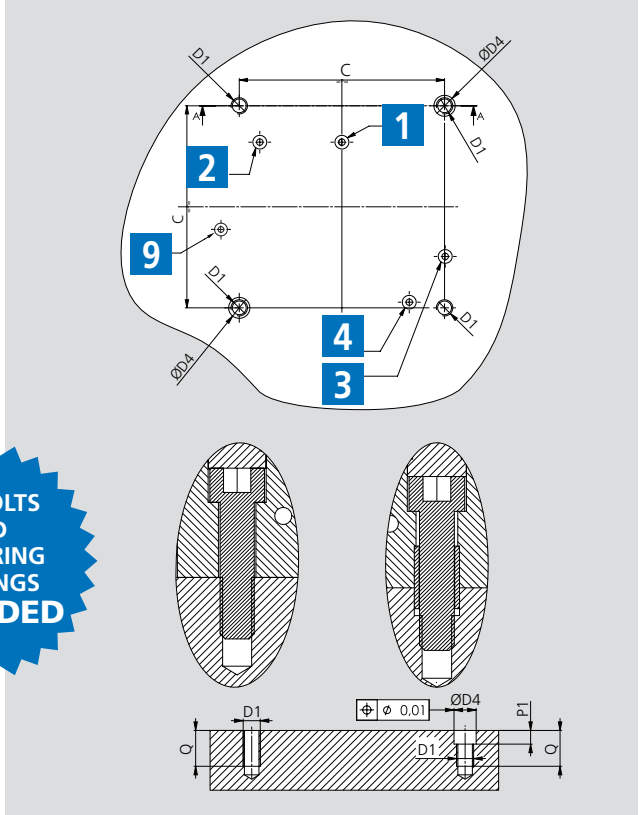

ALL BOLTS AND CENTERING BUSHINGS INCLUDED

FEEDING SEATS: OBLIGATED EXECUTION

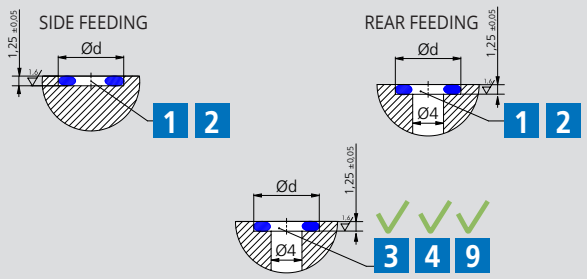

- **1** Open-Rear feeding
- **2** Closed-Rear feeding
- **3** Air purge
- **1A** Open-Side feeding
- **2A** Closed-Side feeding
- **4** Central lubrication
- **5** Lubrication fitting
- **6** Proximity switches seats
- **9** Air sensing connection
- **10** Air sensing outlet

TV	C	D1	D2H7	D4H7	M	M1	M2	M3	M4	M5	M6	M7	M8	M9	P	P1	Q	V	Z	Ød	OR
100	80	M8	10	11	45	29	32	29.5	34.2	27.7	14.2	41.1	8.3	42.7	6	6	18	37.3	96.5	8	OR2018
160	125	M10	12	13	69	48	40	50	59	41	30.7	62.9	4.9	69.8	6	7	21	50	155	8	OR2018
200	160	M12	14	16	88	62	50	65	72.8	52.9	39.5	80.9	9.4	89.5	7	7	24	62	195	8.8	OR2021
250	200	M12	14	16	113	77	64	75	89.8	65.2	48.6	99.8	11.6	110.4	7	7	24	80	239	8.8	OR2021
315	250	M15	18	21	-	-	80	90	115.7	84	62.7	128.5	12.4	141.5	8	7	27	-	-	8.8	OR2021

Notes

Safety valve SAB-1 (OPTIONAL)

Industry 4.0 Product

1 FEATURES

- Safety valve SAB-1 to maintain air pressure during pallet transportation/storage and machining without feed
- Easy and smart opening of the vise by air gun
- TURBO function to increase the clamping forces

ONLY FOR
STV-2
STV-3

PNEUMATIC GUN

WITH STEEL NOZZLE

2 OPERATION

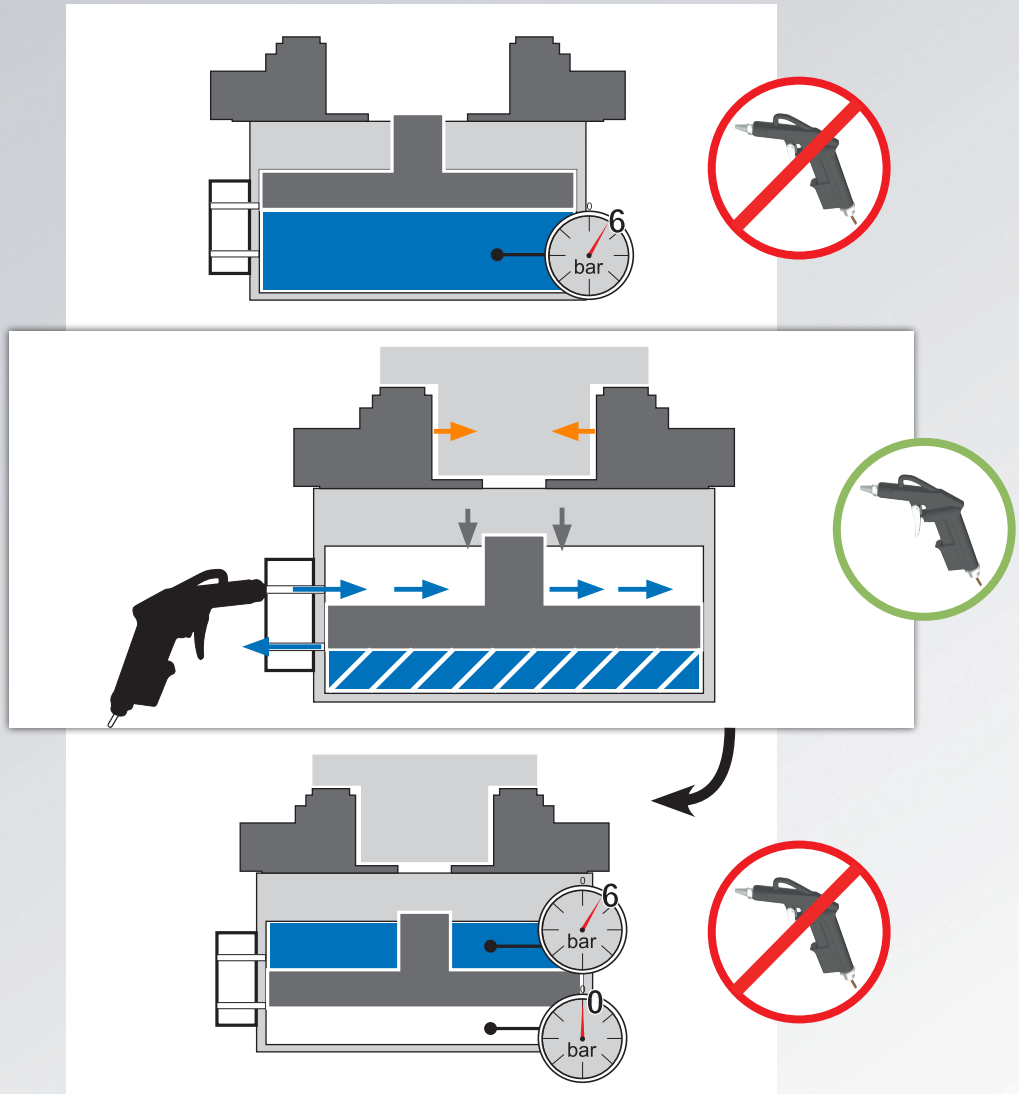

3 MOUNTING

IN CASE OF SEPARATE PURCHASE

▶ **3.1** Before install the **SAB-1** please remember to remove the two set screws, because from factory default setting, the air connection is ready to be used from the bottom side.

▶ **3.2** After that you need close the two holes located on the bottom side using the same set screws or an o-ring.

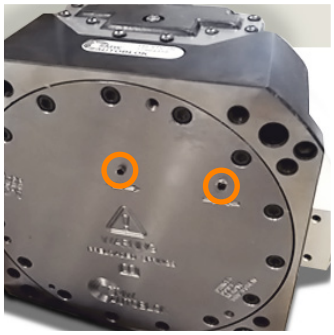

If the SAB-1 is purchased together with the Twin Vises, the assembly and adjustment are done by SMW-Autoblok personnel at our factories.

SOFT TOP JAWS

for Twin Vises

- Soft blank top jaws
- Tongue & Groove

Material: C40 UNI7847

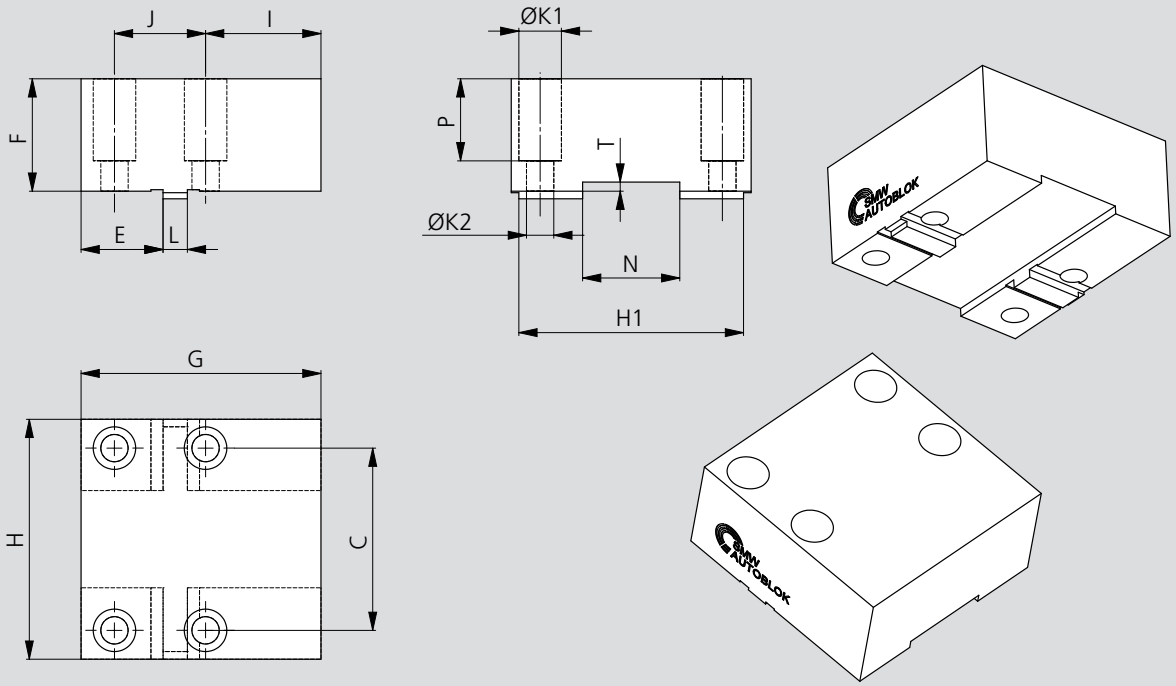

Subject to technical changes.

SOFT BLANK TOP JAWS, TONGUE & GROOVE

Type	Id. No.*	C	E	F	G	H	H1	I	J	K1	K2	L	N	P	T	Clamping range [mm]	Weight [kg]
100 TV / PT	90711063	35	18	27.5	49	54.5	45	21	21	11	7	6h7	20h8	20	3	0 - 70	0.5
125 STV-2 / PT	90711283	35	33	27,5	64	54.5	45	21	35	11	7	6h7	20h8	20	3	0 - 100	0.65
100 TV / PT	90721063	35	18	47.5	49	54.5	45	21	21	11	7	6h7	20h8	40	3	0 - 70	0.85
125 STV-2 / PT	90721283	35	33	47,5	64	54.5	45	21	35	11	7	6h7	20h8	40	3	0 - 100	1.15
160 TV / PT	90711663	60	27	37	79	79	74	38	30	14	9	8h7	32h8	27	3	0 - 120	1.6
180 STV-2 / PT	90711883	60	41	37	93	79	74	38	40	14	9	8h7	32h8	27	3	0 - 140	1.9
160 TV / PT	90721663	60	27	76.5	79	79	74	38	30	14	9	8h7	32h8	66.5	3	0 - 120	3.3
180 STV-2 / PT	90721883	60	41	76.5	93	79	74	38	40	14	9	8h7	32h8	66.5	3	0 - 140	4
200 TV / PT	90712063	80	37	47	98.5	109	92	47.5	40	14	9	8h7	40h8	37	3.5	0 - 150	3.6
200 TV / PT	90722063	80	37	86.5	98.5	109	92	47.5	40	14	9	8h7	40h8	76.5	3.5	0 - 150	6.8
225 STV-2	90712283	80	52	47	113.5	109	92	47.5	50	14	9	8h7	40h8	37	3.5	0 - 170	4.2
225 STV-2	90722283	80	52	86.5	113.5	109	92	47.5	50	14	9	8h7	40h8	76.5	3.5	0 - 170	7.9
250 TV	90712563	90	59	47	120	124	/	44	48	18	11	10h7	50h8	31	3.5	0 - 180	5
250 TV	90722563	90	59	97.5	120	124	/	44	48	18	11	10h7	50h8	81.5	3.5	0 - 180	10.5
315 TV	90713163	120	54	57	150	160	/	75	60	20	13.5	12h7	60h8	42	3.5	0 - 240	10
315 TV	90723163	120	54	102.5	150	160	/	75	60	20	13.5	12h7	60h8	87.5	3.5	0 - 240	18

*The Id. No. refers to one single piece.

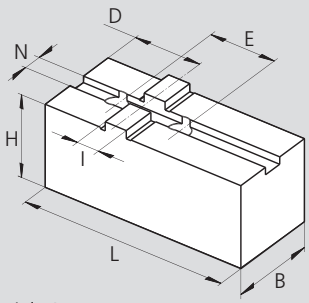

Material: C40 UNI7847

TONGUE & GROOVE SOFT BLANK TOP JAWS "C" FOR TWIN VISE STV-3

Type	Id. No.*	B	H	L	N	D	E	I	Clamping range [mm]	Weight [kg]
180 STV-3	12041660	30	32	80	7.94	30	38.1	12.68	0 - 140	0.58
225 STV-3	12042060	35	37	100	7.94	35	44.4	12.68	0 - 170	0.92

*The Id. No. refers to one single piece.

SOFT TOP JAWS

for Twin Vises

- Soft blank top jaws
- Fine serration 1.5mmx60°

Material: C40 UNI7847

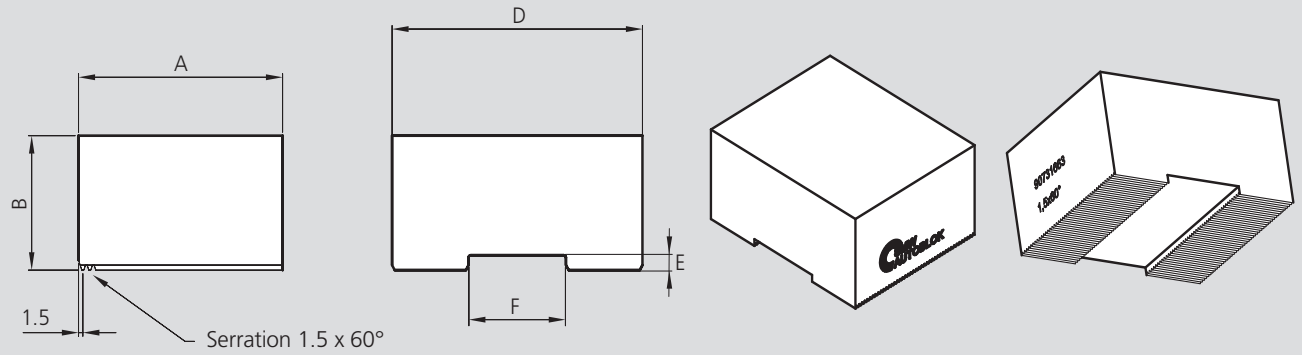

Subject to technical changes.

SOFT BLANK TOP JAWS, FINE SERRATION 1.5 mm x 60°

Type	Id. No.*	A	B	D	E	F	Weight [kg]
100-125 TV	90731063	42	29.5	54.5	3.5	20H8	0.5
100-125 TV	90741063	47	49.5	54.5	3.5	20H8	0.95
160-180 TV	90731663	66	39.5	79	3.5	32H8	1.5
160-180 TV	90741663	76	79	79	3.5	32H8	3.6
200-225 TV	90732063	87	49.5	109	4	40H8	3.5
200-225 TV	90742063	87	89	109	4	40H8	6.5
250 TV	90732563	108	49.5	124	4	50H8	5
250 TV	90742563	108	99	124	4	50H8	10.2
315 TV	90733163	160	49.5	160	4	60H8	9.6
315 TV	90743163	160	105	160	4	60H8	20.7

*The Id. No. refers to one single piece.

Material: C40 UNI7847

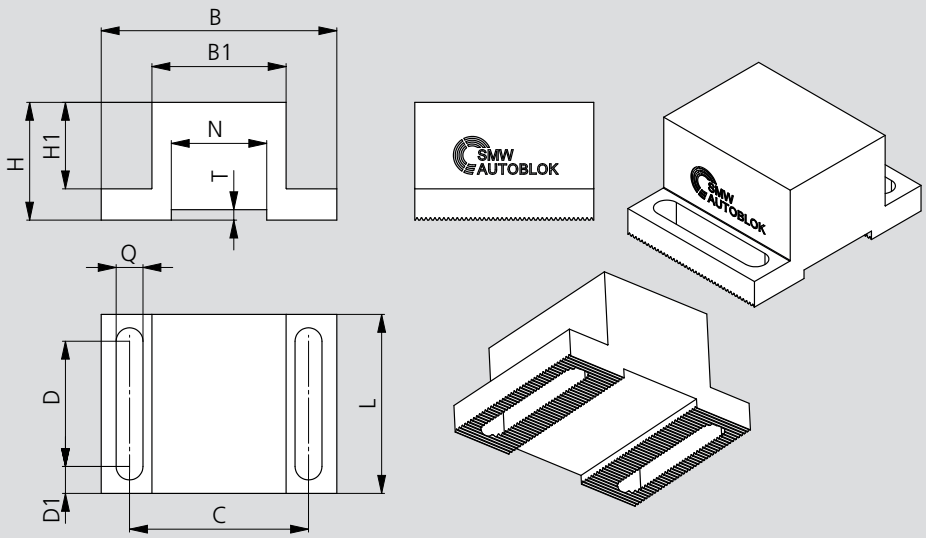

Subject to technical changes.

SOFT BLANK TOP JAWS, FINE SERRATION 1.5 mm x 60°

Type	Id. No.*	B	B1	C	D	D1	H	H1	L	N	Q	T	Weight [kg]
100-125 TV	90751063	54.5	24	35	30	6	29.5	21.5	42	20H8	6.6	3.5	0.25
160-180 TV	90751663	79	45	60	42	9	39.5	29	60	32H8	9	3.5	0.9
200-225 TV	90752063	109	65	80	62	9	49.5	39	80	40H8	9	4	2
250 TV	90752563	124	72	90	62	14	49.5	33	90	50H8	11	4	2.7
315 TV	90753163	160	90	120	82	12	49.5	31.5	106	60H8	13.5	4	4.2

*The Id. No. refers to one single piece.

SOFT TOP JAWS

for Twin Vises PT-RR

■ Soft top jaws QUICK CHANGE

Material: C40 UNI7847

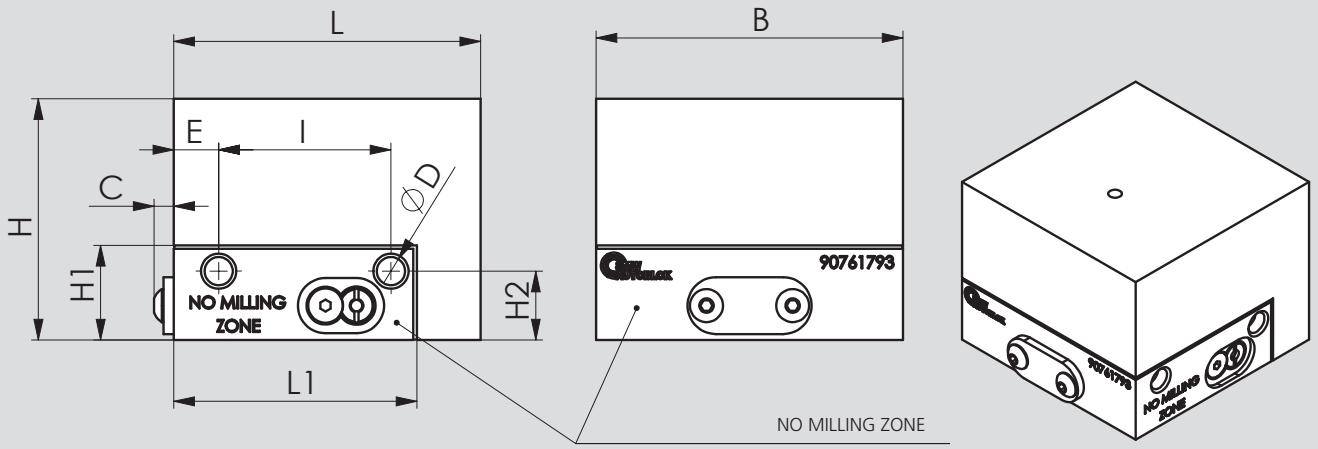

Subject to technical changes

Type	Id. No.*	B	C	øD	E	H	H1	H2	I	L	L1	Weight [kg]
160 PT-RR	90711793	89	6	8,2	13	70	27	20	50	89	70	4
160 PT-RR	90721793	89	6	8,2	13	110	27	20	50	89	70	6,5
200 PT-RR	90712193	109	6	8,2	29	80	27	20	50	109	89	7
200 PT-RR	90722193	109	6	8,2	29	120	27	20	50	109	89	11
250 PT-RR	90712643	139	0	8,2	40	90	27	20	50	130	100	12
250 PT-RR	90722643	139	0	8,2	40	140	27	20	50	130	100	19

*The Id.no. refers to one single piece

O.D. CLAMPING

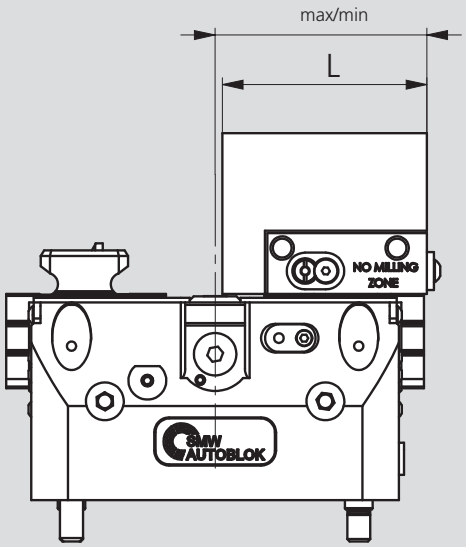

I.D. CLAMPING

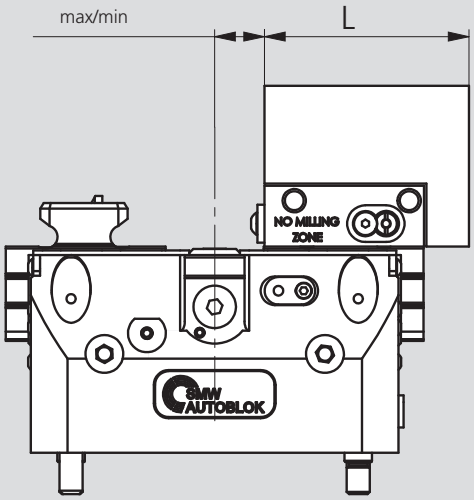

Subject to technical changes

Type	Id. No.*	O.D. Clamping		I.D. Clamping	
		max/min	Clamping range	max/min	Clamping range
160 PT-RR	90711793	92/84	0-130	21,5/13,5	60/215
160 PT-RR	90721793	92/84	0-120	21,5/13,5	70/215
200 PT-RR	90712193	113/103	0-160	24,5/14,5	65/260
200 PT-RR	90722193	113/103	0-150	24,5/14,5	75/260
250 PT-RR	90712643	135/120	0-190	34/19	90/320
250 PT-RR	90722643	135/120	0-180	34/19	100/320

*The Id.no. refers to one single piece

UNLOCK JAW STEP

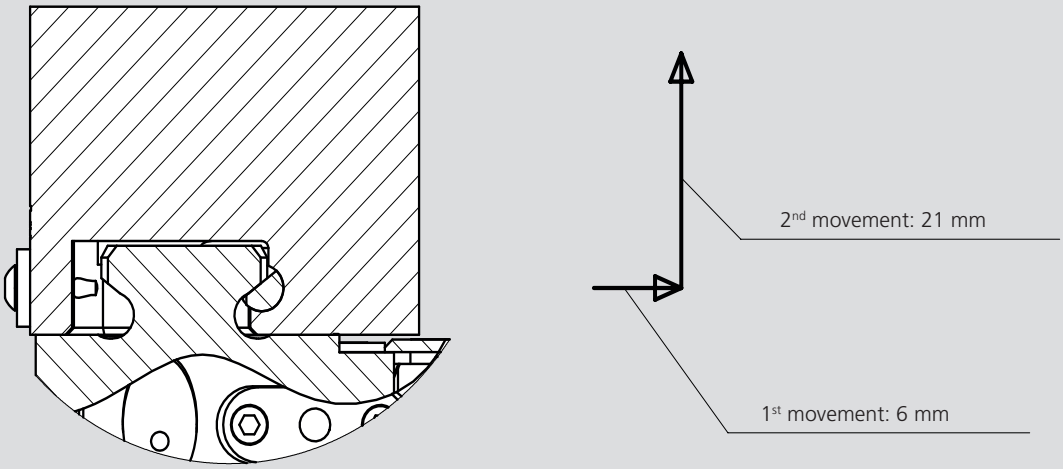

O.D. CLAMPING

I.D. CLAMPING

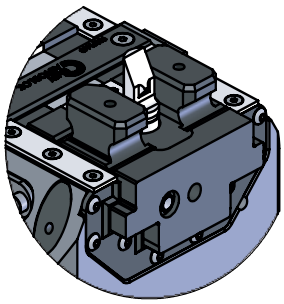

FROM OD CLAMPING TO ID CLAMPING INSTRUCTIONS AND VICE VERSA

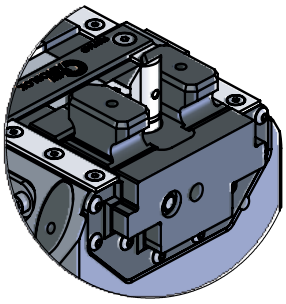

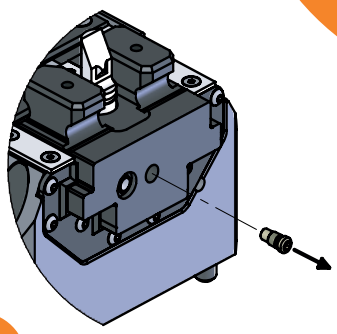

1

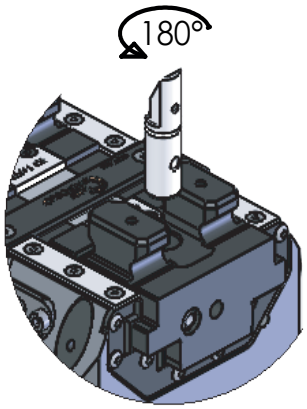

2

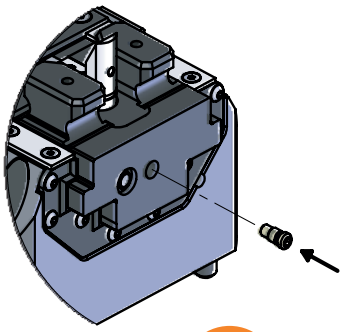

3

WIDE HARD TOP JAWS

TOP JAWS SinterGrip

- Hard top jaws with SinterGrip inserts
- Metric serrated 1.5 mm x 60°

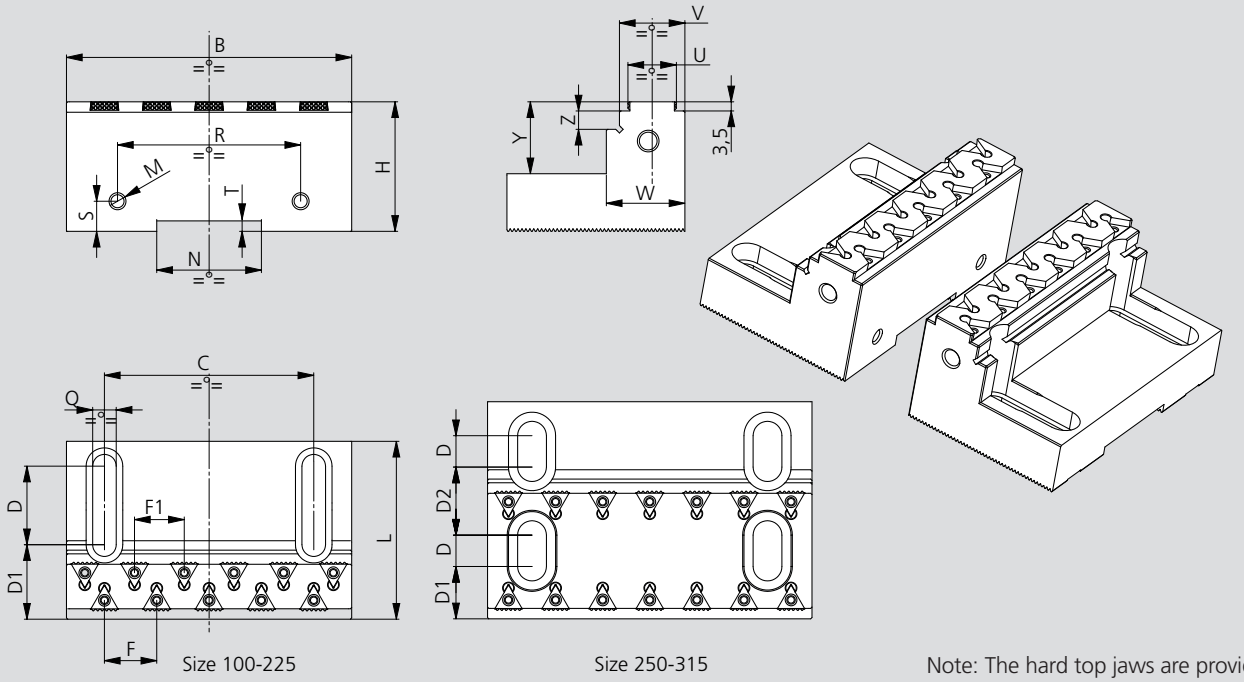

Size 100-225

Size 250-315

Note: The hard top jaws are provided with Id. No. 58450129 inserts mounted only on one side.

Subject to technical changes.

WIDE HARD TOP JAWS DIMENSIONS

Type	Id. No. set of 2 top jaws	B [mm]	C [mm]	D [mm]	D1 [mm]	D2 [mm]	F [mm]	F1 [mm]	H [mm]	L [mm]	M [mm]	N [mm]	Q [mm]	R [mm]	S [mm]	T [mm]	U [mm]	V [mm]	W [mm]	Y [mm]	Z [mm]	No. inserts provided	*No. seat inserts	Weight [kg]
100-125 TV-STV-PT	58454115	72	35	21	9	/	12/23	12/23	26	39	M5	20H8	6,6	60	10	3,5	21.5	28	33	13	5	8	16	0.7
160-180 TV-STV-PT	58454125	104	60	30	14	/	15/28	15/28	34.5	57	M6	32H8	9	86	11.5	3,5	21.5	28	33	15.5	5	10	20	2
200-225 TV-STV-PT	58454135	109	80	30	29	/	20	19	34.5	68	M6	40H8	9	70	11.5	4	18.5	25	30	15.5	7	12	22	2.3
250 TV-PT	58454145	124	90	12	20	26	18	18	39.5	83	M8	50H8	11	80	15	4	45.5	52	57	17.5	7	14	28	4.3
315 TV	58454155	160	120	15	23.5	35	20	20	44.5	105	M8	60H8	13	80	15	4	55.5	62	67	17.5	7	16	32	8.3

*The number of seats inserts indicated refers to set of 2 top jaws

WIDE HARD TOP JAWS CLAMPING RANGES for long and normal stroke Twin Vise models

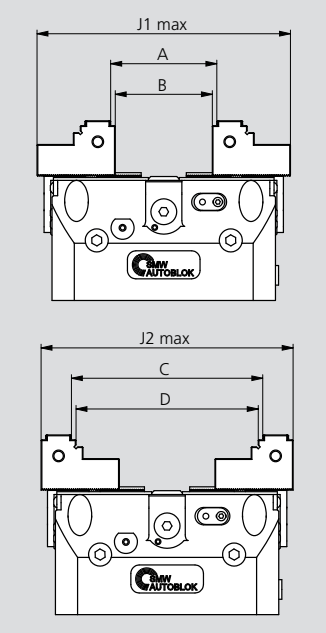

** the maximum gripping force values are indicative since they depend on the number of inserts used.

***with 200 TV-PN and 200 PT-N models it is not possible to clamp workpieces with dimensions between from 93 to 96 mm.

Id. No. set of 2 top jaws	Type	A [mm]	B [mm]	J1 max. [mm]	C [mm]	D [mm]	J2 max. [mm]	Gripping force max. [kN]**
58454115	100 TV-N	10 - 32	4 - 25	106	32 - 70	25 - 63	122	13
	100 TV-L							
	100 PT-N	10 - 46	4 - 40	120	32 - 83	25 - 76	135	13
	100 PT-L							
	125 PT-N	10 - 60	4 - 53	134	32 - 98	25 - 91	150	22
	125 PT-L							
	125 STV-N	10 - 60	4 - 53	134	32 - 98	25 - 91	150	26
	125 STV-L							
58454125	160 TV-N	10 - 70	4 - 63	180	66 - 138	59 - 131	190	40
	160 TV-L							
	160 PT-N	10 - 70	4 - 63	180	66 - 138	59 - 131	190	40
	160 PT-L							
	180 STV-N	10 - 85	4 - 78	195	66 - 160	59 - 153	213	54
	180 STV-L							
58454135	200 TV-N	10 - 93 (***)	4 - 86	225	96 - 175	89 - 168	220	60
	200 TV-L	10 - 96	4 - 89	228				
	200 PT-N	10 - 93 (***)	4 - 86	225	96 - 175	89 - 168	220	60
	200 PT-L	10 - 96	4 - 89	228				
	225 STV-N	10-96	4 - 89	228	96 - 202	89 - 196	250	66
	225 STV-L							
58454145	250 TV-N	10 - 88	4 - 82	250	88 - 192	82 - 186	292	60
	250 TV-L	10 - 106	4 - 100	270	88 - 202	82 - 196	302	
	250 PT-N	10 - 88	4 - 82	250	88 - 192	82 - 186	292	60
	250 PT-L	10 - 106	4 - 100	270	88 - 202	82 - 196	302	
58454155	315 TV-N	18 - 108	12 - 102	315	104 - 246	98 - 240	366	100
	315 TV-L	18 - 132	12 - 126	338	120 - 255	114 - 248	375	

WIDE HARD TOP JAWS

- Hard top jaws with SinterGrip inserts
- Metric serrated 1.5 mm x 60°

TOP JAWS SinterGrip

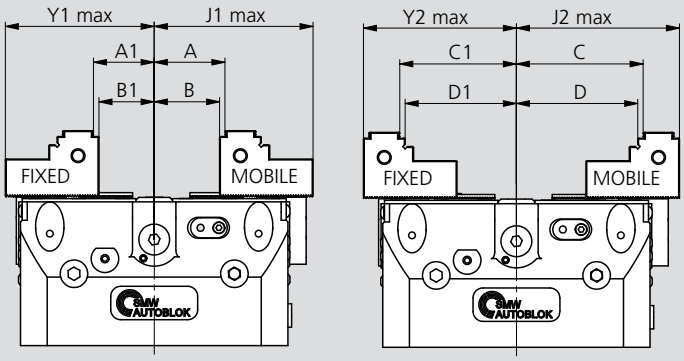

Note: the A1 - B1 - C1 -D1 dimensions for fixed jaws clamping range have tolerance ± 0.75 mm due to the serration pitch 1.5 mm.

Subject to technical changes.

WIDE HARD TOP JAWS CLAMPING RANGES for one fixed jaw Twin Vise models

Id. No. set of 2 top jaws	Type	A [mm]	B [mm]	A1 [mm]	B1 [mm]	J1 max. [mm]	Y1 max. [mm]	C [mm]	D [mm]	C1 [mm]	D1 [mm]	J2 max. [mm]	Y2 max. [mm]	Gripping force max. [kN]**
58454115	100 TV-F	5 - 16	2 - 13	5 - 16	2 - 13	53	52	16 - 35	13 - 32	16 - 35	13 - 32	61	60	13
	100 PT-F	5 - 23	2 - 20	5 - 23	2 - 20	60	59	16 - 41	13 - 38	16 - 41	13 - 38	67	66	13
	125 PT-F	5 - 30	2 - 27	5 - 30	2 - 27	67	66	16 - 49	13 - 46	16 - 49	13 - 46	75	74	15
58454125	160 TV-F	5 - 35	2 - 32	5 - 35	2 - 32	90	89	33 - 69	30 - 66	33 - 69	30 - 66	95	93	32
	160 PT-F	5 - 35	2 - 32	5 - 35	2 - 32	90	89	33 - 69	30 - 66	33 - 69	30 - 66	95	93	32
58454135	200 TV-F	5 - 48	2 - 45	5 - 48	2 - 45	114	113	48 - 87	45 - 84	48 - 87	45 - 84	110	109	44
	200 PT-F	5 - 48	2 - 45	5 - 48	2 - 45	114	113	48 - 87	45 - 84	48 - 87	45 - 84	110	109	44
58454145	250 TV-F	5 - 53	2 - 50	5 - 53	2 - 50	135	134	44 - 101	41 - 98	44 - 88	41 - 85	151	137	40
58454155	315 TV-F	9 - 66	6 - 63	9 - 66	6 - 63	169	168	60 - 127	57 - 124	60 - 112	57 - 109	187	171	65

** the maximum gripping force values are indicative since they depend on the number of inserts used.

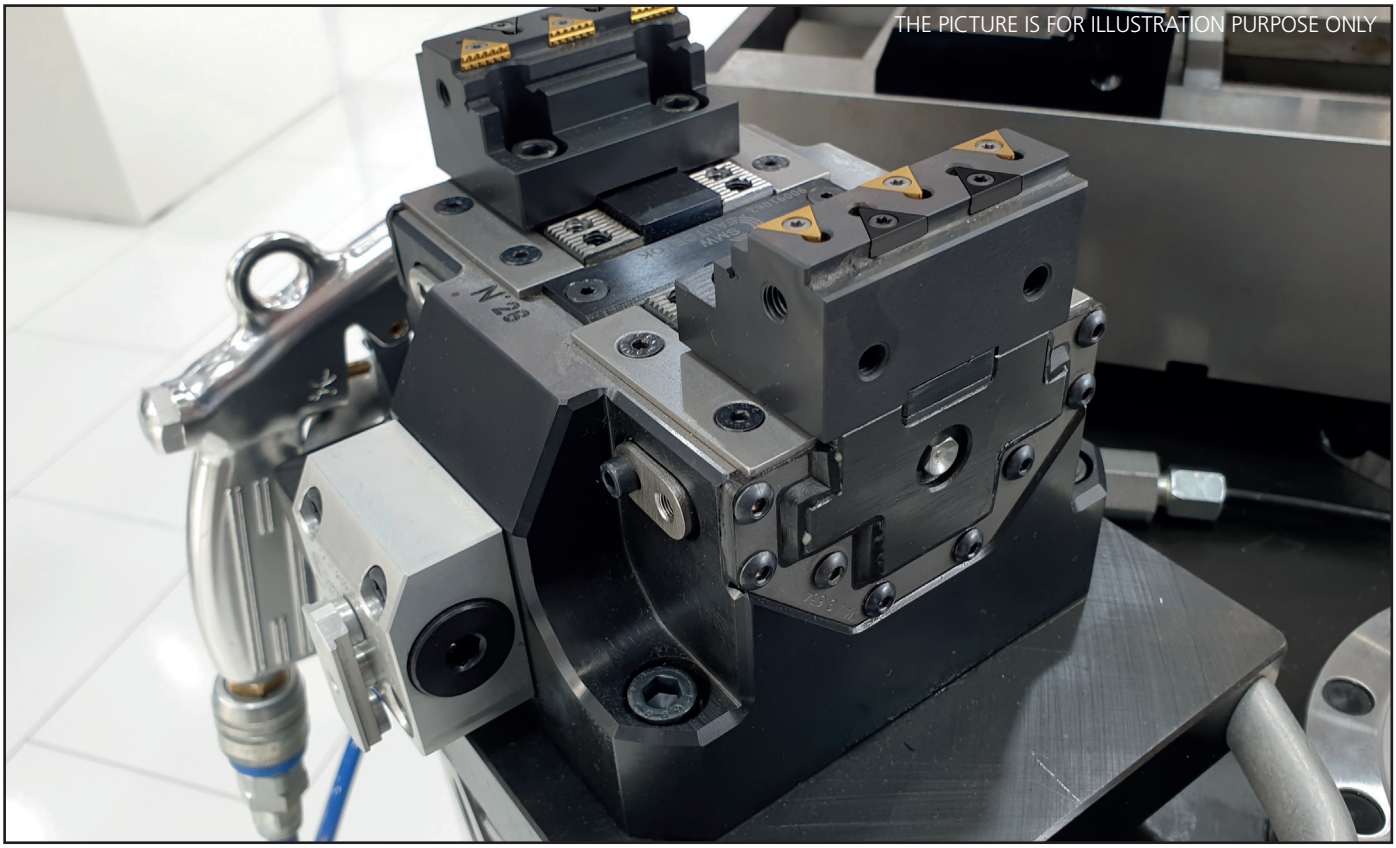

NARROW HARD TOP JAWS

TOP JAWS SinterGrip

- Hard top jaws with SinterGrip inserts
- Metric serrated 1.5 mm x 60°

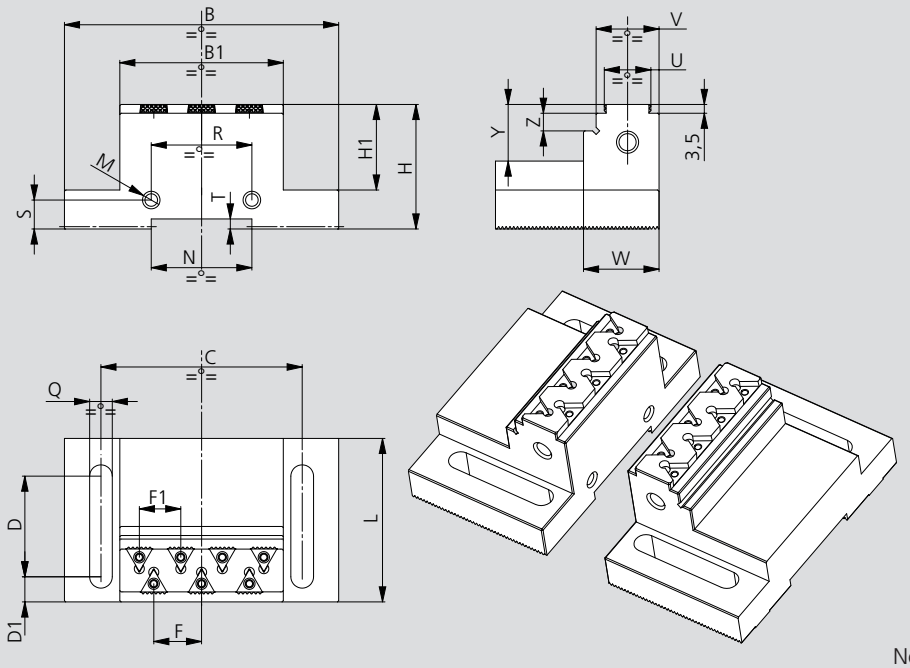

Subject to technical changes.

Note: the hard top jaws are provided with Id. No. 58450129 inserts mounted only on one side.

NARROW HARD TOP JAWS DIMENSIONS

Type	Id. No. set of 2 top jaws	B [mm]	B1 [mm]	C [mm]	D [mm]	D1 [mm]	F [mm]	F1 [mm]	H [mm]	H1 [mm]	L [mm]	M [mm]	N [mm]	Q [mm]	R [mm]	S [mm]	T [mm]	U [mm]	V [mm]	W [mm]	Y [mm]	Z [mm]	No. inserts provided	*No. seat inserts	Weight [Kg]
100-125 TV-STV-PT	58454215	54.5	24	35	27	6	12	12	29.5	20	39	-	20H8	6.6	-	-	3.5	21.5	28	33	17.5	7	4	8	0.4 kg
160-180 TV-STV-PT	58454225	79	45	60	38	9	20	15.5	39.5	26	56	M6	32H8	9	26	11.5	3.5	18.5	25	30	17.5	7	6	10	1.3 kg
200-225 TV-STV-PT	58454235	109	65	80	40	10	19	16.5	44.5	27.5	65	M6	40H8	9	40	11.5	4	18.5	25	30	18.5	7	8	14	2.5 kg
250 TV-PT	58454245	124	72	90	48	14	14	14	49.5	34	76	M6	50H8	11	40	11.5	4	21.5	28	33	20.5	7	10	20	3.5 kg
315 TV	58454255	160	90	120	60	15	15	15	49.5	32	90	M6	60H8	13	60	15	4	27.5	34	39	19.5	7	12	24	5.5 kg

*The number of seats inserts indicated refers to set of 2 top jaws

NARROW HARD TOP JAWS CLAMPING RANGES for long and normal stroke Twin Vise models

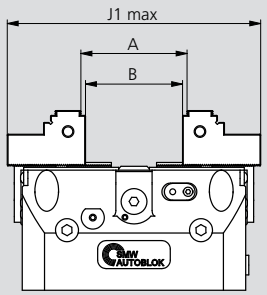

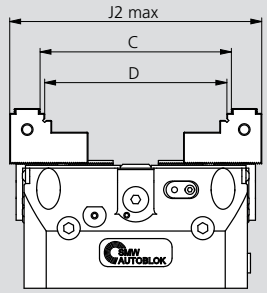

**the maximum gripping force values are indicative since they depend on the number of inserts used.

Id. No. set of 2 top jaws	Type	A [mm]	B [mm]	J1 max. [mm]	C [mm]	D [mm]	J2 max. [mm]	Gripping force max. [kN]**
58454215	100 TV-N	10-32	4-25	106	32-75	25-68	127	13
	100 TV-L							
	100 PT-N	10-46	4-40	120	32-85	25-78	137	13
	100 PT-L							
	125 PT-N	10-60	4-53	134	32-100	25-93	152	22
	125 PT-L							
	125 STV-N	10-60	4-53	134	32-100	25-93	152	26
	125 STV-L							
58454225	160 TV-N	10-74	4-67	182	74-140	67-133	188	40
	160 TV-L							
	160 PT-N	10-74	4-67	182	74-140	67-133	188	40
	160 PT-L							
	180 STV-N	10-88	4-82	196	74-160	67-153	208	54
	180 STV-L	10-98	4-92	206				
58454235	200 TV-N	10-93	4-87	220	93-175	87-168	220	60
	200 TV-L							
	200 PT-N	10-93	4-87	220	93-175	87-168	220	60
	200 PT-L							
	225 STV-N	10-110	4-104	237	93-202	87-196	250	66
	225 STV-L	10-120	4-114	247				
58454245	250 TV-N	22-108	16-102	255	108-218	102-212	272	60
	250 TV-L	22-122	16-116	270				
	250 PT-N	22-108	16-102	255	108-218	102-212	272	60
	250 PT-L	22-122	16-116	270				
58454255	315 TV-N	30-138	23-132	315	138-275	132-268	340	100
	315 TV-L	30-162	23-156	338	160-275	154-268	340	

NARROW HARD TOP JAWS

TOP JAWS SinterGrip

- Hard top jaws with SinterGrip inserts
- Metric serrated 1.5 mm x 60°

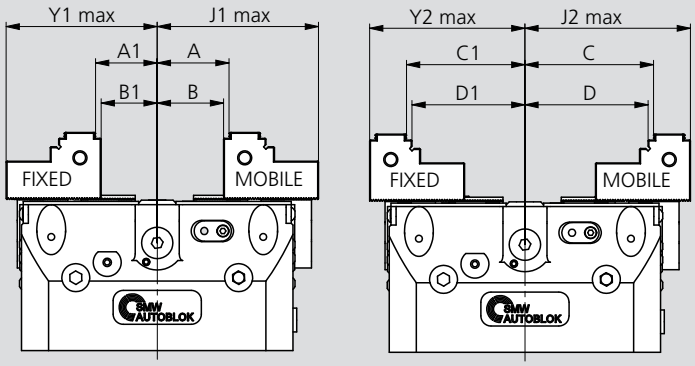

Note: the A1 - B1 - C1 -D1 dimensions for fixed jaws clamping range have tolerance ± 0.75 mm due to the serration pitch 1.5 mm

Subject to technical changes.

NARROW HARD TOP JAWS CLAMPING RANGES for fixed jaw Twin Vise models

Id. No. set of 2 top jaws	Type	A [mm]	B [mm]	A1 [mm]	B1 [mm]	J1 max. [mm]	Y1 max. [mm]	C [mm]	D [mm]	C1 [mm]	D1 [mm]	J2 max. [mm]	Y2 max. [mm]	Gripping force max. [kN]**
58454215	100 TV-F	5 - 16	2 - 13	5 - 16	2 - 13	53	52	16 - 38	13 - 34	16 - 38	13 - 34	64	63	13
	100 PT-F	5 - 23	2 - 20	5 - 23	2 - 20	60	59	16 - 43	13 - 40	16 - 43	13 - 40	69	68	13
	125 PT-F	5 - 30	2 - 27	5 - 30	2 - 27	67	66	16 - 50	13 - 47	16 - 50	13 - 47	76	75	15
58454225	160 TV-F	5 - 37	2 - 34	5 - 37	2 - 34	91	90	37 - 70	34 - 67	37 - 70	34 - 67	94	92	32
	160 PT-F	5 - 37	2 - 34	5 - 37	2 - 34	91	90	37 - 70	34 - 67	37 - 70	34 - 67	94	92	32
58454235	200 TV-F	5 - 47	2 - 44	5 - 47	2 - 44	110	109	47 - 87	44 - 84	47 - 87	44 - 84	110	109	44
	200 PT-F	5 - 47	2 - 44	5 - 47	2 - 44	110	109	47 - 87	44 - 84	47 - 87	44 - 84	110	109	44
58454245	250 TV-F	11 - 61	8 - 58	11 - 61	8 - 58	135	134	54 - 109	51 - 106	54 - 109	51 - 106	136	134	40
58454255	315 TV-F	15 - 81	12 - 78	15 - 81	12 - 78	169	168	80 - 137	77 - 134	80 - 137	77 - 134	170	168	65

** the maximum gripping force values are indicative since they depend on the number of inserts used.

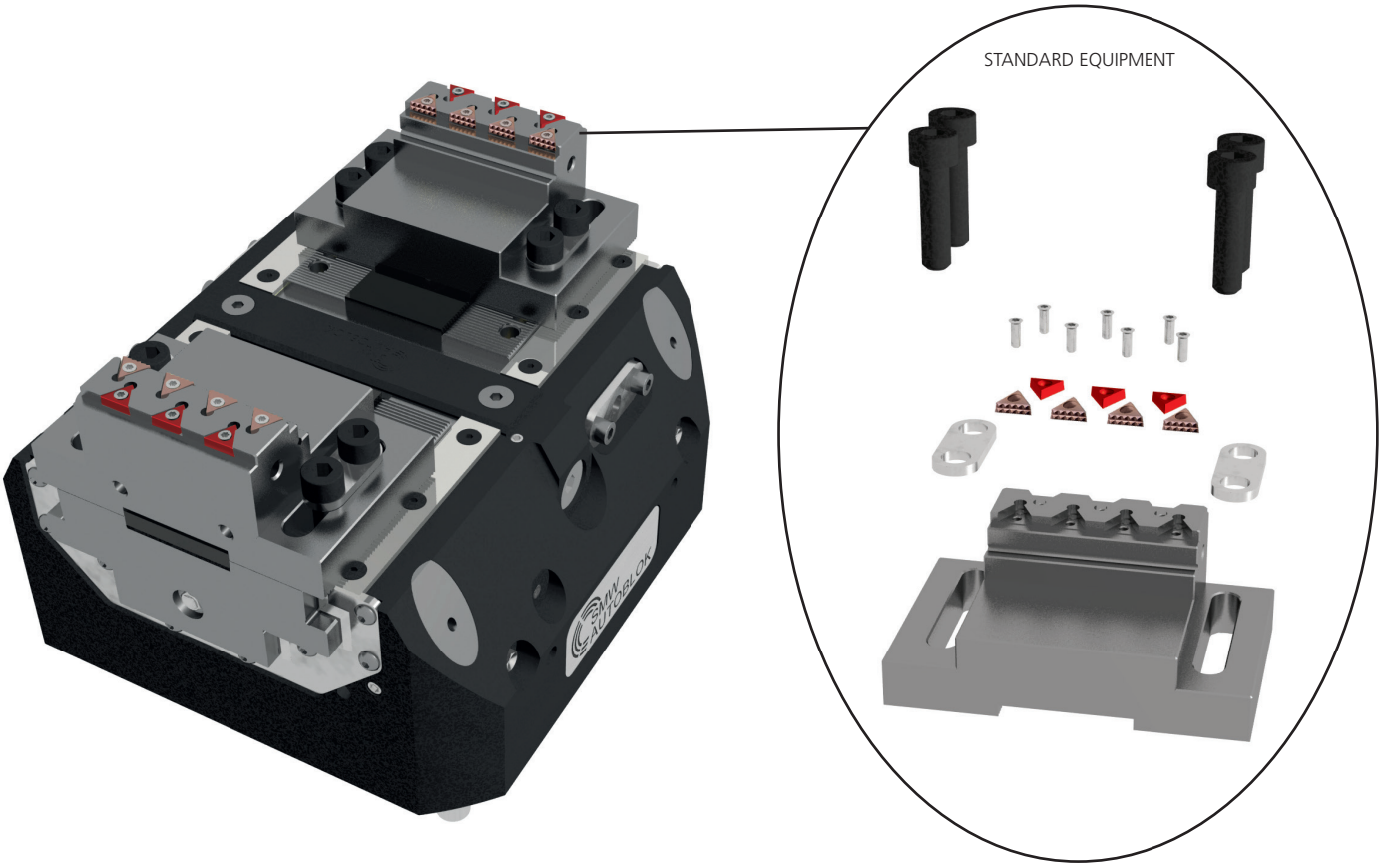

Stroke control proximities

(OPTIONAL)

■ Pneumatic jaw stroke control valve

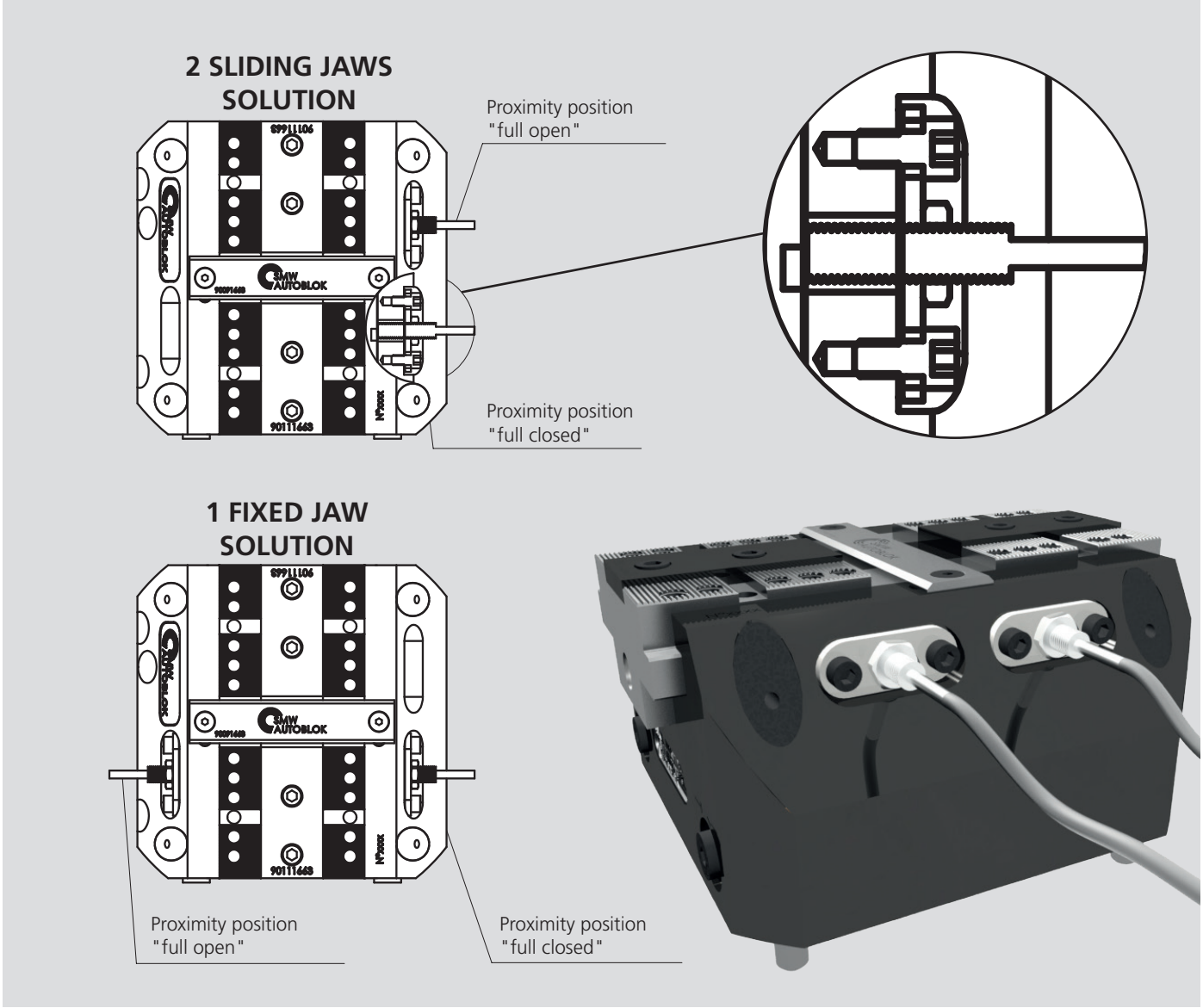

Twin Vise Type	Thread	Balluff sensor*	Omron sensor (alternative)	Telemecanique sensor (alternative)	S	L
100 TV	M5x0.5	BES516-3005-G-E4-C-PU02	E2EX1-B1	XS1N05PA310	0.5	20
160-200-250 TV	M8x1	BES516-324-G-E4-C-PU02	E2AS08KS02-WP-B12M	XS508B1PAL2	1	30
315 TV	M8x1	BESE08EF-PSC20B-BP02	E2AS08LS02-WP-BI2M	XS508BLPAL2	1	40
125 STV-2	M5x0.5	BES516-3005-G-E4-C-PU02	E2EX1-B1	XS1N05PA310	0.5	20
180-225 STV-2	M8x1	BES516-324-G-E4-C-PU02	E2AS08KS02-WP-B12M	XS508B1PAL2	1	30
100-125 PT	M5x0.5	BES516-3005-G-E4-C-PU02	E2EX1-B1	XS1N05PA310	0.5	20
160-200-250 PT	M8x1	BES516-324-G-E4-C-PU02	E2AS08KS02-WP-B12M	XS508B1PAL2	1	30

* Recommended by SMW-AUTOBLOK

Pneumatic valve

■ Pneumatic jaw stroke control valve

(OPTIONAL)

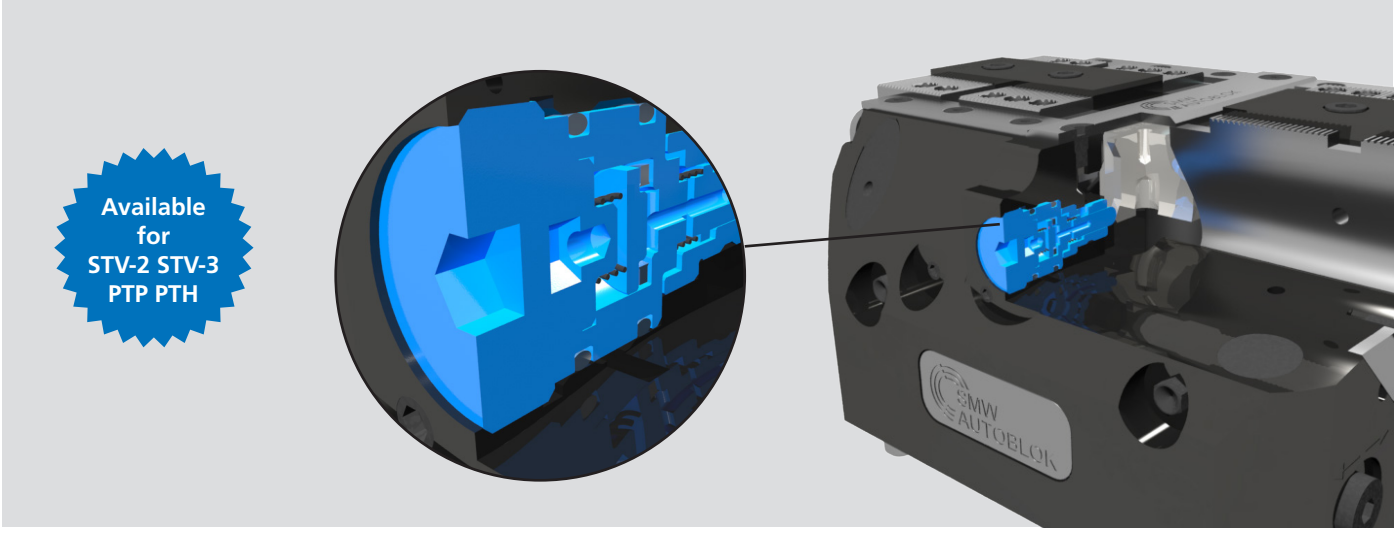

Twin Vise type	Id. No.
125 STV-2	90902283
180 STV-2	90902283
225 STV-2	90902283
180 STV-3	97901801
225 STV-3	97902204
100 PTP PTH	90901163
125 PTP PTH	90901763
160 PTP PTH	90901763
200 PTP PTH	90901763
250 PTH	90901763

The pneumatic open / close stroke control valve signals the locking jaws end-of-stroke positions, both in fully opened and fully closed positions.
The valve needs a pneumatic line with **filtered and lubricated air and a pressure of 0,5-1 bar**.
• when the locking jaws are in one of the end stroke position (fully opened or closed), the valve is open causing a pressure drop in the pneumatic line or the beginning of an air flow.
• when the locking jaws are in the working stroke, the valve is closed and there is no pressure drop in the pneumatic line and there no air flow.

ONLY THE PTP AND PTH VISES
The vises can be supplied (when requested) with the **opposite functioning** of the valve: that is closed valve at the end of the strokes and open in the working / middle stroke.

3

Safety valve SAB-1

(OPTIONAL)

The Safety valve SAB-1 maintains air pressure in the cylinder pallet transportation / storage or machining without feed.

Pneumatic gun

with steel nozzle

Multiple clamping systems from SMW-AUTOBLOK

Advantages for the user:

- Best use of the machine table
- Wide range of standard accessories
- Highest efficiency due to rapid set-up times
- Maximum flexibility: Can be used for single or multi clamping on the machine table and also on tombstones
- Fully protected by covers and guards

SMW-AUTOBLOK offers different multiple clamping systems: CV with serration 2.5 x 60°. These multiple clamping systems come with different jaw widths and lengths. For the CV system, the "CLAK-System" quick change system for jaws and parallels is available as an option. The user can also clamp safe raw parts using jaws fitted with SinterGrip clamping inserts (see photo).

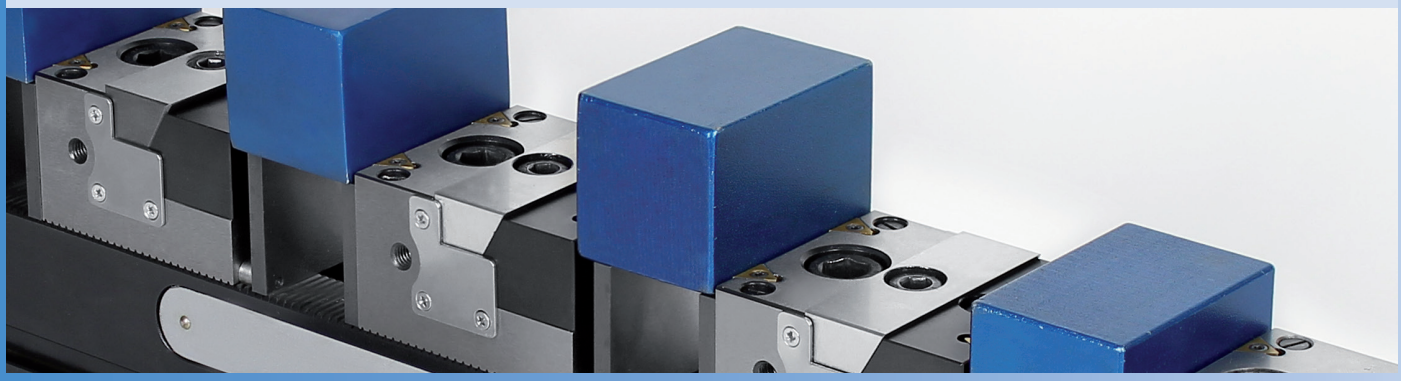

Multiple clamping system

Page 216

CV
Serration 2.5 x 60°

Multiple clamping system

- Quick change system „CLAK-System“ for jaws and parallels optional available
- Wide range of accessories

Page 217

CV-S
Serration 2.5 x 60°

Multiple clamping system

- Quick change system „CLAK-System“ for jaws and parallels optional available
- Wide range of accessories
- SinterGrip jaws

Page 226

CV-VCS
CROSS TOMBSTONE

Multiple clamping system

- Steel cross tombstone ready to use on horizontal machining centres
- Wide range of accessories

Page 227

CV-CN
COLUMN

Multiple clamping system

- Full usability on CNC indexing tables
- Modular system: Wide range of accessories
- Quick change system „CLAK-System“ for jaws and parallel claks optional available
- Compact design

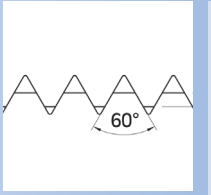

Page 228

CV
Comparison

Different serrations

- CV

4

CV

Multiple clamping system

■ Serration 2.5 x 60°
■ Quick change system „CLAK-System“ optional available

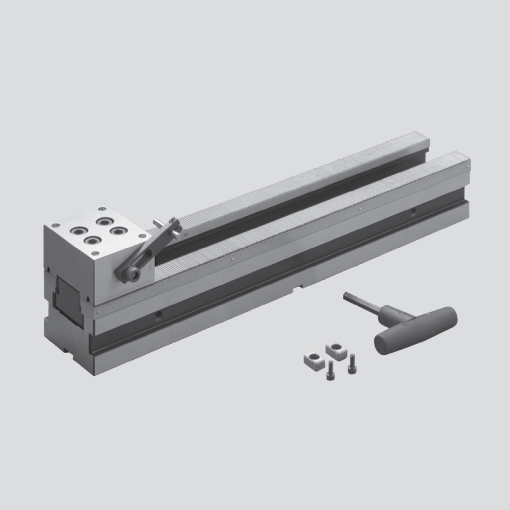

Application/customer benefits

- Full usability of the machine table
- Modular system: Extensive range of accessories
- Quick change system „CLAK-System“ for jaws and parallel claks optional available (see page 223)
- Maximum efficiency due to quick change over
- Can be used for single or multiclamp

Technical features

- Serration :2.5 x 60°
- Jaw width: 38 mm, 60 mm und 90 mm, Length: 250 mm, 400 mm, 500 mm and 630 mm
- Optional: Interfaces for zero point clamping system APS / WPS / ZeroAct (on request)

Standard equipment

Multiple clamping system:
Base, fix jaw (one side smooth, one side grooved), 1 pair of 12 mm positioning keys, clamping wrench, workstop

Technical data

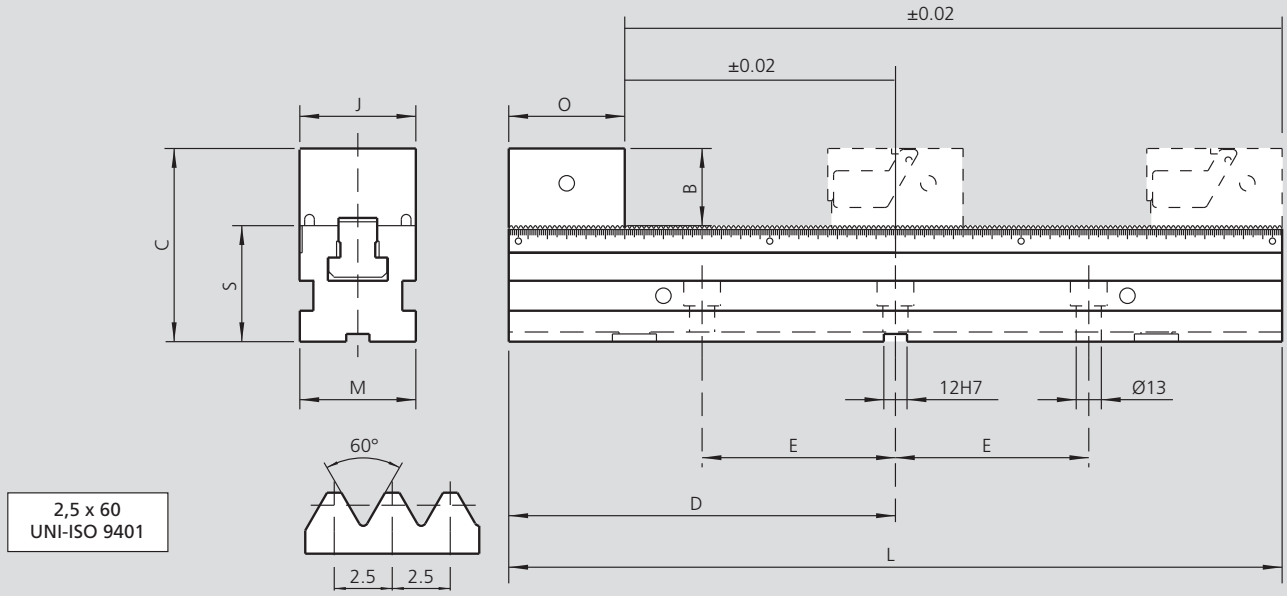

Subject to technical changes.

Type	Id. No.	B [mm]	C [mm]	D [mm]	E [mm]	J [mm]	L [mm]	M [mm]	O [mm]	S ±0.01 [mm]	Weight [kg]
CV 38-250	77584004	40	100	125	100	38	250	60	60	60	6
CV 38-400	77584001			200	100		400				9
CV 38-500	77584002			250	150		500				11
CV 38-630	77584003			315	200		630				13
CV 60-250	77584104	40	100	125	100	60	250	60	60	60	6.5
CV 60-400	77584101			200	100		400				9.5
CV 60-500	77584102			250	150		500				11.5
CV 60-630	77584103			315	200		630				13.5
CV 90-250	77584204	45	115	125	100	90	250	90	70	70	11
CV 90-400	77584201			200	100		400				16
CV 90-500	77584202			250	150		500				19.5
CV 90-630	77584203			315	200		630				23.5

Multiple clamping system

CV-S

- Serration 2.5 x 60°
- Quick change system „CLAK-System“ optional available

Application/customer benefits

- Full usability of the machine table
- Modular system: Extensive range of accessories
- Quick change system „CLAK-System“ for jaws and parallel claks optional available (see page 223)
- Maximum efficiency due to quick change over
- Can be used for single or multiclamp

SinterGrip
Page 302

Technical features

- Serration: 2.5 x 60°
- Jaw width: 38 mm, 60 mm und 90 mm, Length: 250 mm, 400 mm, 500 mm and 630 mm
- Optional: Interfaces for zero point clamping system APS / WPS / ZeroAct (on request)

Standard equipment

Multiple clamping system:
Base, fix jaw (one side with SinterGrip; one side smooth), CV-S 60: 2pcs. STD SinterGrip inserts / CV-S 90: 3pcs. STD SinterGrip inserts (SinterGrip inserts ALU or HRC on request), 1 pair of 12mm positioning keys, clamping wrench, workstop

Technical data

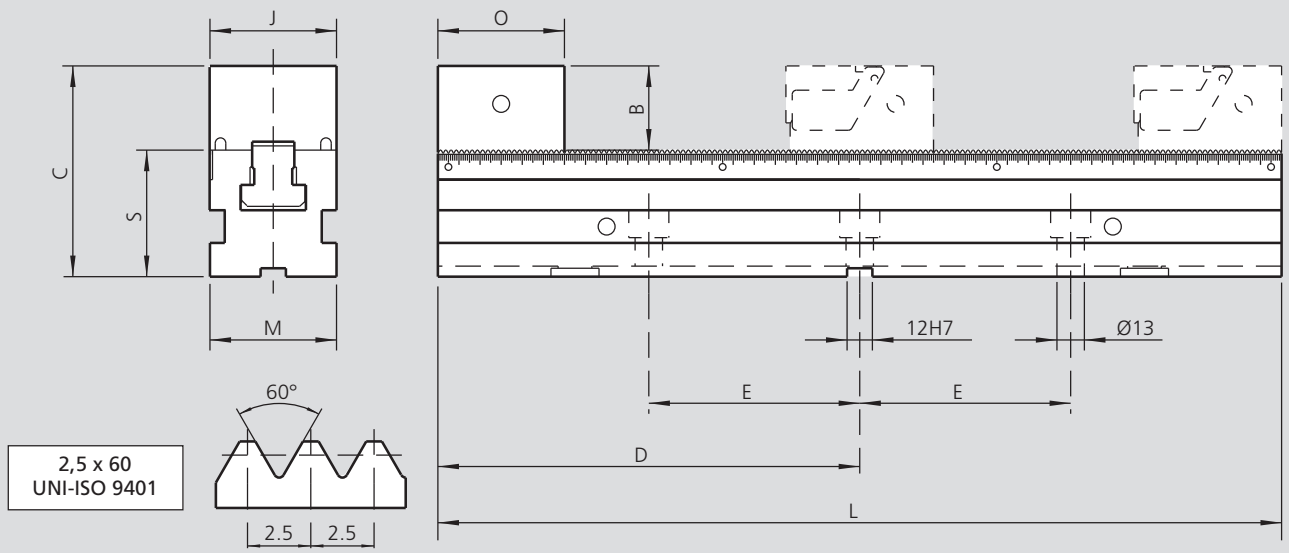

Subject to technical changes.

Type	Id. No.	B [mm]	C [mm]	D [mm]	E [mm]	J [mm]	L [mm]	M [mm]	O [mm]	S ±0.01 [mm]	Weight [kg]
CV-S 60-250	77584664	40	100	125	100	60	250	60	60	60	6.5
CV-S 60-400	77584661			200	100		400				9.5
CV-S 60-500	77584662			250	150		500				11.5
CV-S 60-630	77584663			315	200		630				13.5
CV-S 90-250	77584694	45	115	125	100	90	250	90	70	70	11
CV-S 90-400	77584691			200	100		400				16
CV-S 90-500	77584692			250	150		500				19.5
CV-S 90-630	77584693			315	200		630				23.5

CV / CV-S

Multiple clamping system

- Serration 2.5 x 60°
- Quick change system „CLAK-System“ optional available

Clamping force diagrams

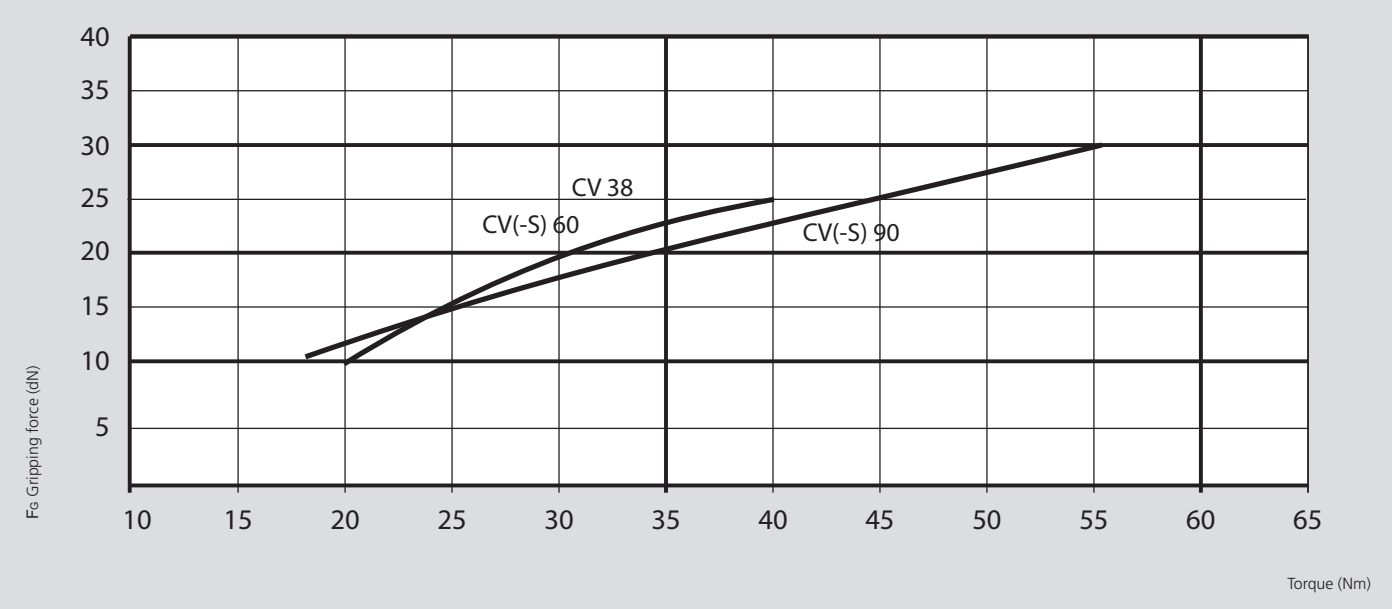

Clamping capacity

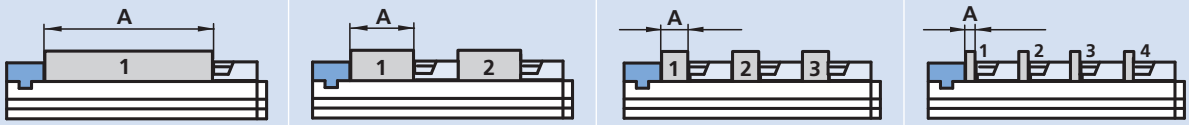

Type	A max. [mm]			
CV 38-250	120	25	-	-
CV 38-400	270	100	43	15
CV 38-500	370	150	76	40
CV 38-630	500	215	120	73
CV(-S) 60-250	120	25	-	-
CV(-S) 60-400	270	100	43	15
CV(-S) 60-500	370	150	76	40
CV(-S) 60-630	500	215	120	73
CV(-S) 90-250	99	-	-	-
CV(-S) 90-400	249	84	29	-
CV(-S) 90-500	349	134	62	26
CV(-S) 90-630	479	199	106	59

Application examples CV-S

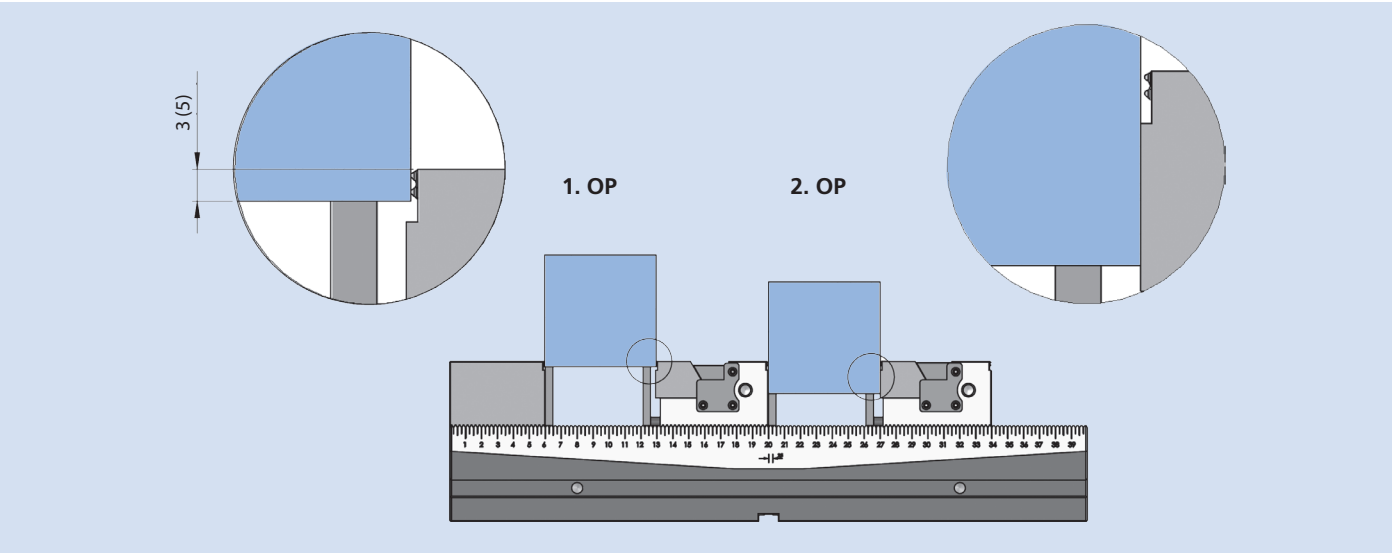

Movable jaw set CV-S 60

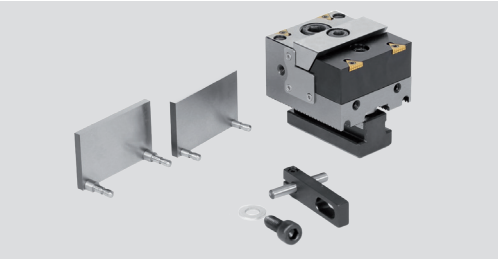

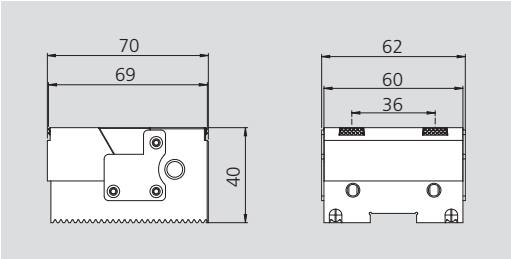

Consisting of:
Movable jaw set
complete with 1 work stop,
4 SinterGrip inserts STD for steel*,
1 pair of parallels H37

SinterGrip
Page 302

Type	Id. No.	Weight [kg]
CV-S 60	77584660	1.4

Movable jaw set CV-S 90

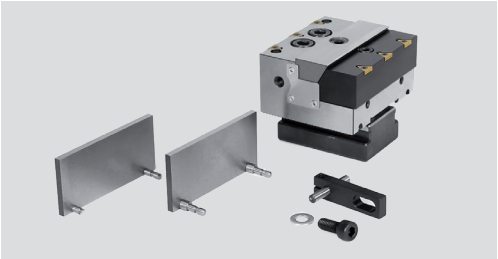

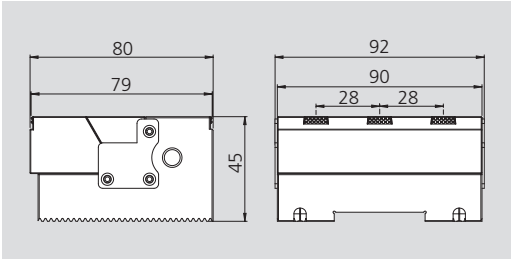

Consisting of:
Movable jaw set
complete with 1 work stop,
6 SinterGrip inserts STD for steel*,
1 pair of parallels H42

SinterGrip
Page 302

Type	Id. No.	Weight [kg]
CV-S 90	77584690	2.9

Fixed jaw set CV-S 60

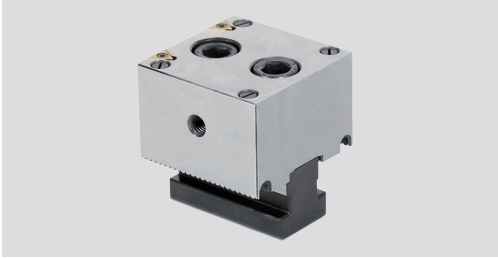

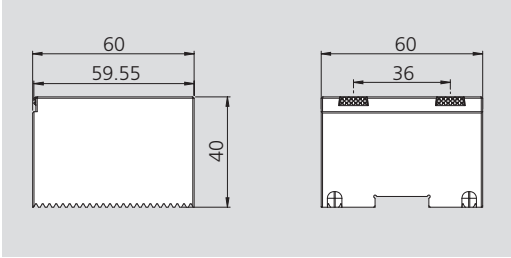

Consisting of:
Fixed jaw set
complete with 1 work stop,
2 SinterGrip inserts STD for steel*

SinterGrip
Page 302

Type	Id. No.	Weight [kg]
CV-S 60	58467260	1.4

Fixed jaw set CV-S 90

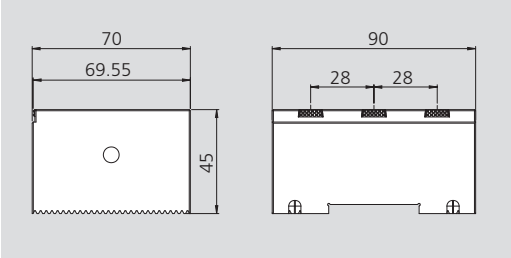

Consisting of:
Fixed jaw set J60
complete with 1 work stop,
3 SinterGrip inserts STD for steel*

SinterGrip
Page 302

Type	Id. No.	Weight [kg]
CV-S 90	58467290	2.9

* ALU or HRC on request.

Adjustable jaws with pull down, smooth, set

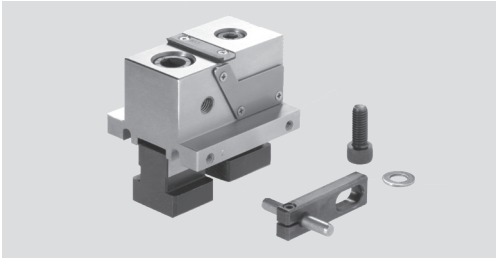

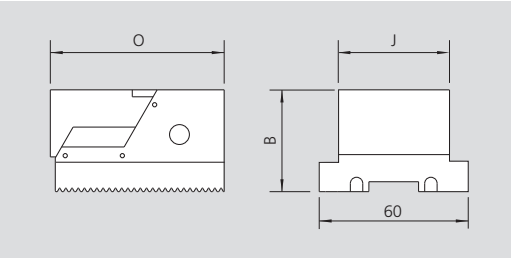

Consisting of:
Adjustable jaws smooth
incl. workstop

Type	Id. No.	B [mm]	J [mm]	O [mm]	Weight [kg]
CV 38	77584023	40	38	70	1

Adjustable jaws with pull down, smooth, set

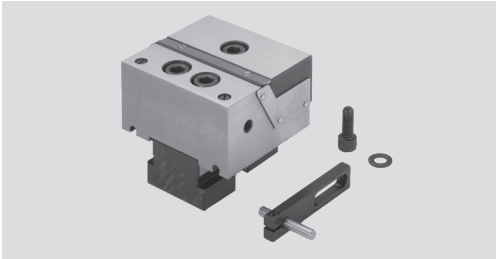

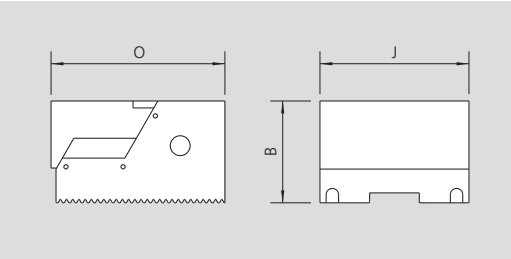

Consisting of:
Adjustable jaws smooth
incl. workstop

Type	Id. No.	B [mm]	J [mm]	O [mm]	Weight [kg]
CV 60	77584123	40	60	70	1.4
CV 90	77584223	45	90	80	2.9

Adjustable jaws with pull down, grooved, set (for raw workpieces)

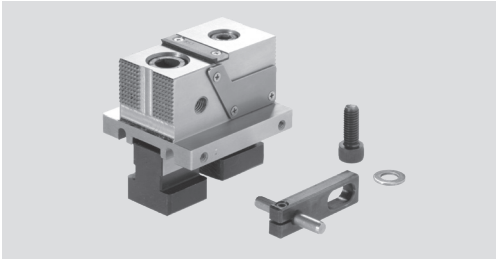

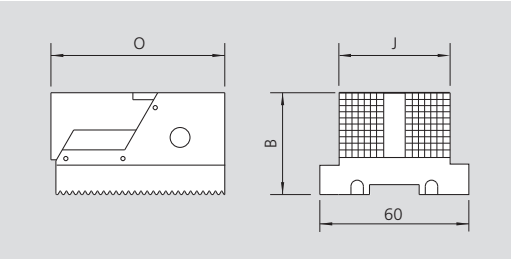

Consisting of:
Adjustable jaws grooved
incl. workstop

Type	Id. No.	B [mm]	J [mm]	O [mm]	Weight [kg]
CV 38	77584028	40	38	70	1

Adjustable jaws with pull down, grooved, set (for raw workpieces)

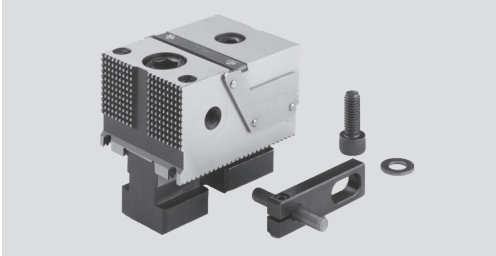

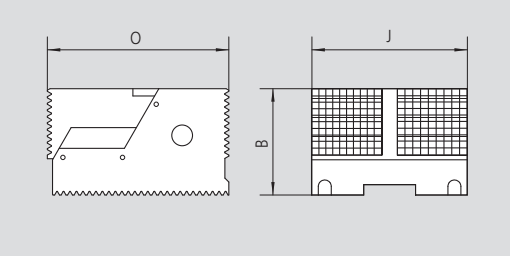

Consisting of:
Adjustable jaws grooved
incl. workstop

Type	Id. No.	B [mm]	J [mm]	O [mm]	Weight [kg]
CV 60	77584128	40	60	70	1.4
CV 90	77584228	45	90	80	2.9

Adjustable jaws double with pull down, smooth, set

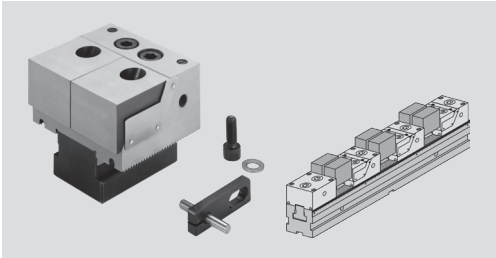

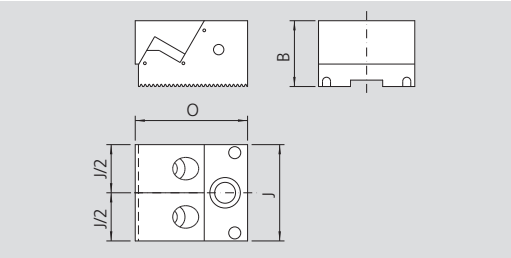

Consisting of:
Adjustable jaws double smooth incl. workstop

Type	Id. No.	B [mm]	J [mm]	O [mm]	Weight [kg]
CV 60	77584124	40	60	70	1.5
CV 90	77584224	45	90	80	3

Adjustable jaws with aluminium-clamping inserts, set

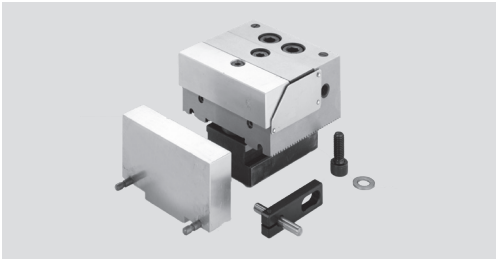

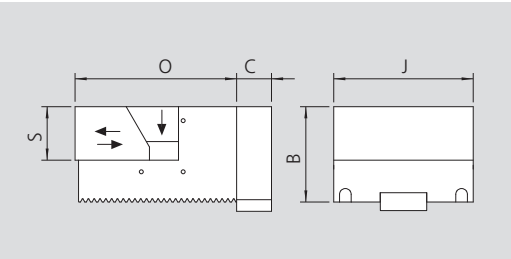

Consisting of:
Adjustable jaws with aluminium-clamping inserts incl. workstop

Type	Id. No.	B [mm]	C [mm]	J [mm]	O [mm]	S [mm]	Weight [kg]
CV 60	77584145	40	15	60	69.5	23	1.2
CV 90	77584245	45	20	90	80	25	2.7

Adjustable jaws with soft steel-clamping inserts, set

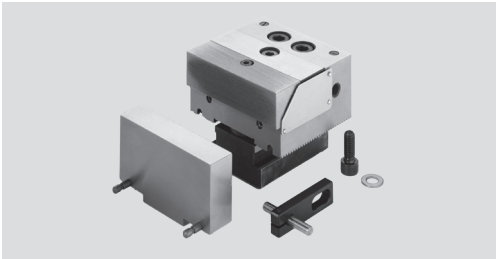

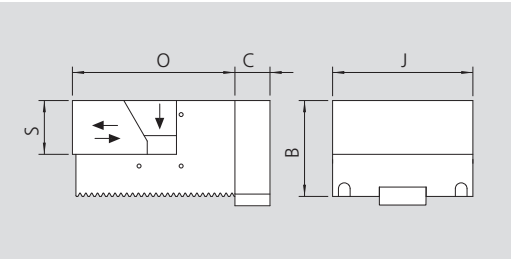

Consisting of:
Adjustable jaws with soft steel-clamping inserts incl. workstop

Type	Id. No.	B [mm]	C [mm]	J [mm]	O [mm]	S [mm]	Weight [kg]
CV 60	77584146	40	15	60	69.5	23	1.4
CV 90	77584246	45	20	90	80	25	3

Adjustable jaws with hard steel-clamping inserts, set

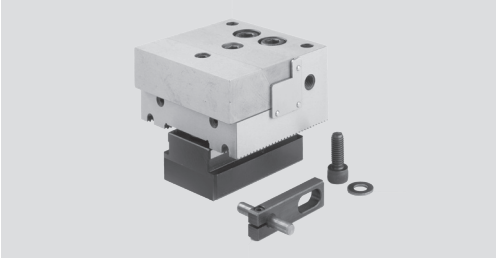

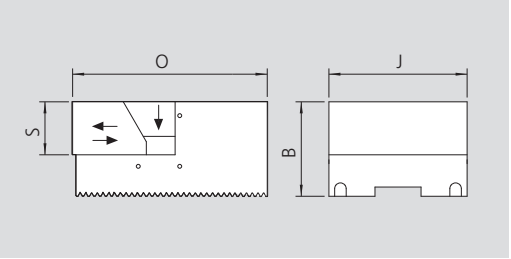

Consisting of:
Adjustable jaws with hard steel-clamping inserts incl. workstop

Type	Id. No.	B [mm]	J [mm]	O [mm]	S [mm]	Weight [kg]
CV 60	77584147	40	60	69.5	23	1.4
CV 90	77584247	45	90	80	25	3

Fix jaws with T-nut, set

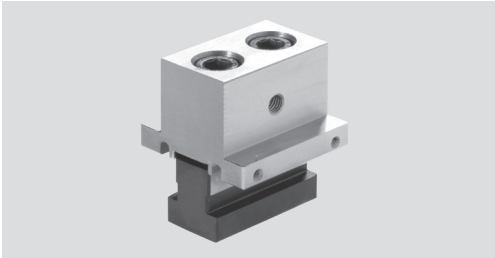

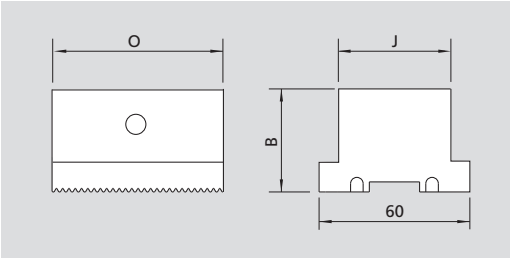

Consisting of:
Fix jaws with T-nuts

Type	Id. No.	B [mm]	J [mm]	O [mm]	Weight [kg]
CV 38	58407200	40	38	60	1

Fix jaws with T-nut, set

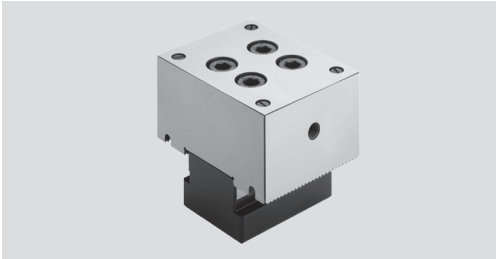

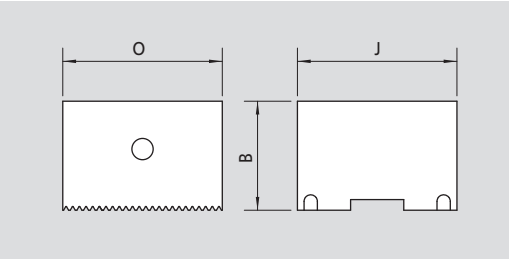

Consisting of:
Fix jaws with T-nuts

Type	Id. No.	B [mm]	J [mm]	O [mm]	Weight [kg]
CV 60	58417200	40	60	60	1.4
CV 90	58427200	45	90	70	2.9

CLAK-System: Quick change for multiple clamping system CV

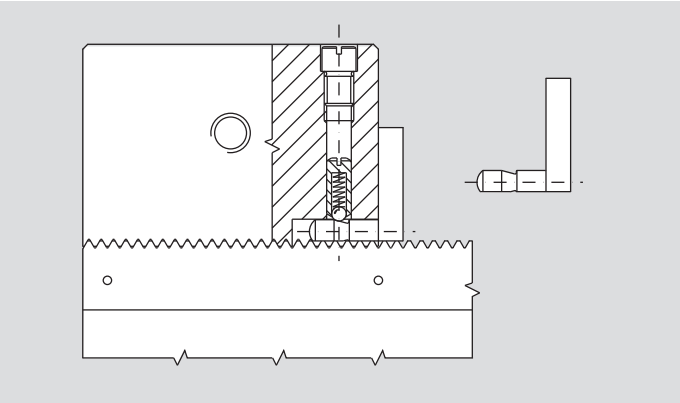

The exclusive and proven CLAK-System, for the quick change of parallels and jaws has been applied for use with the CV. The CLAK-System ensures highest repeatability and minimum set-up times.

This equipment offers:
- The quick change of parallels and jaws
- The elimination of clamps and locks thanks to the patented selflocking system
- The increase in accuracy

All components are heat treated and precision ground.

Parallels with quick change „CLAK-System“, set

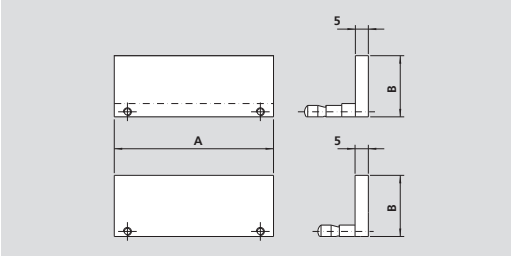

Consisting of:
4 pairs of parallels
with quick change
„CLAK-System“

Type	Id. No.	A [mm]	B [mm]				Weight [kg]
CV 38	58409204	38	18	23	28	37	0.4
CV 60	58419204	60	18	23	28	37	0.49
CV 90	58429204	90	18	23	33	42	0.77

Prism jaw with quick change „CLAK-System“

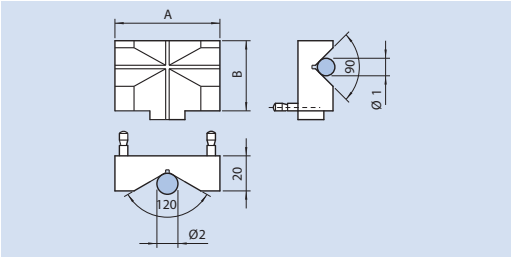

Consisting of:
Prism jaw
with quick change
„CLAK-System“

Type	Id. No.	A [mm]	B [mm]	Ø 1		Ø 2	
				min. [mm]	max. [mm]	min. [mm]	max. [mm]
CV 38	58409400	38	40	10	24	9	45
CV 60	58419400	60	40	10	28	11	70
CV 90	58429400	90	45	10	28	11	70

Clamping insert, hard, serrated

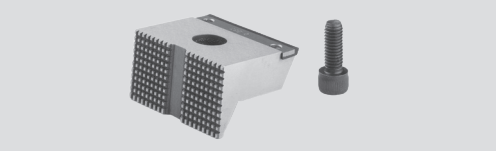

Type	Id. No.
CV 38	58404419
CV 60	58414419
CV 90	58424419

Clamping insert, hard, smooth

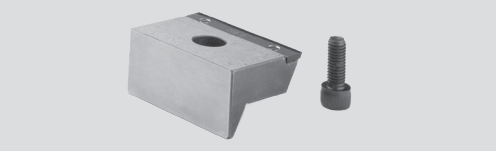

Type	Id. No.
CV 38	58400409
CV 60	58410409
CV 90	58420409

Pair of parallels, with quick change „CLAK-System“

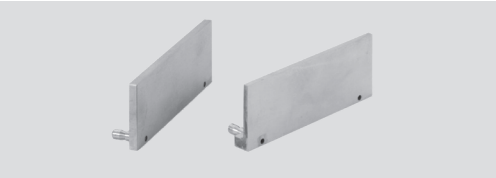

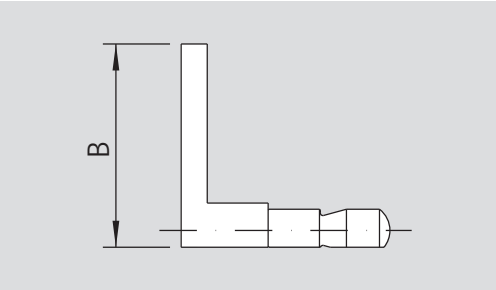

Type	Id. No.	B [mm]
CV 38	58403518	18
CV 38	58403523	23
CV 38	58403528	28
CV 38	58403537	37
CV 60	58413518	18
CV 60	58413523	23
CV 60	58413528	28
CV 60	58413535	35
CV 60	58413537	37
CV 90	58423518	18
CV 90	58423523	23
CV 90	58423533	33
CV 90	58423540	40
CV 90	58423542	42

Pair of parallels, soft, aluminium, with quick change „CLAK-System“

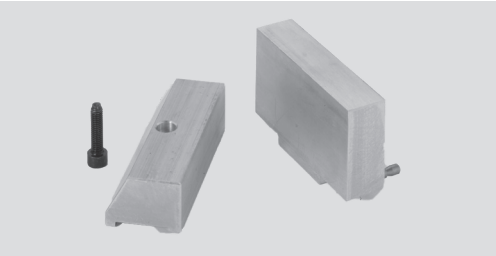

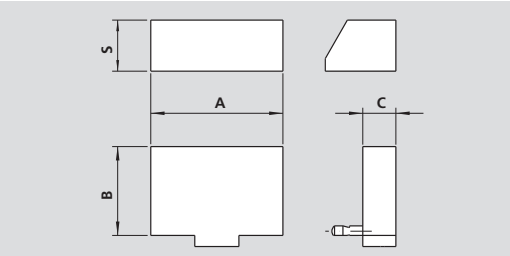

Consisting of:
Pair of soft clamping inserts
in aluminium,
with jaw quick change
„CLAK-System“

Type	Id. No.	A [mm]	B [mm]	C [mm]	S [mm]	Weight [kg]
CV 60	58419549	60	40	15	23	0.19
CV 90	58429549	90	45	20	25	0.4

Pair of clamping inserts, soft, steel, with quick change „CLAK-System“

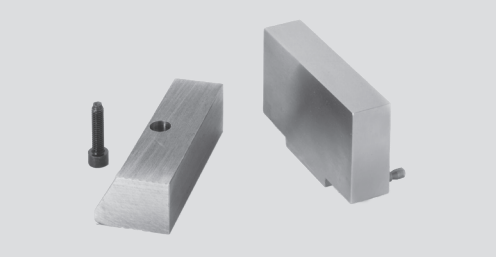

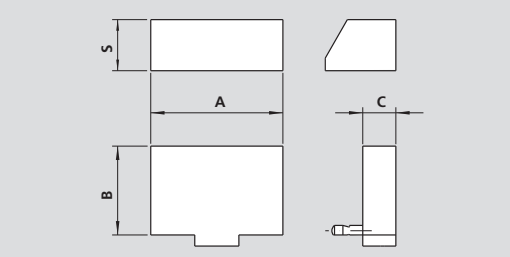

Consisting of:
Pair of soft clamping inserts
in steel,
with jaw quick change
„CLAK-System“

Type	Id. No.	A [mm]	B [mm]	C [mm]	S [mm]	Weight [kg]
CV 60	58419649	60	40	15	23	0.58
CV 90	58429649	90	45	20	25	1.2

SinterGrip clamping jaw

CV-560

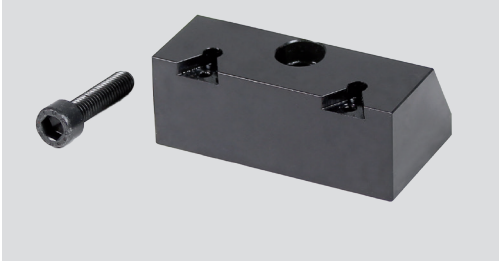

CV-590

Consisting of:
Jaw and mounting screw,
without SinterGrip inserts

SinterGrip
Page 302

Type	Id. No.
CV-S 60	58460469
CV-S 90	58460499

Workstop

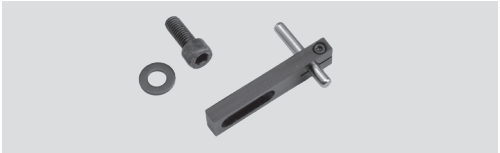

Type	Id. No.	
CV 38 / 60	58315010	for fixed support
CV 90	58325010	for fixed support
CV 38 / 60 / 90	58315020	for movable support

Pair of clamps

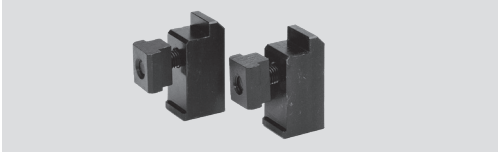

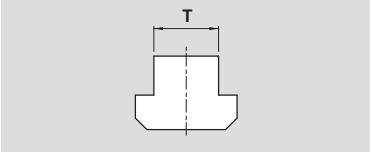

Consisting of:
Pair of clamps
complete with screw and T-nut

Type	Id. No.					
T	12 mm	14 mm	16 mm	18 mm	20 mm	22 mm
CV 38 / 60	58012792	58012793	58012794	58012795	58012796	58012797
CV 90	58022792	58022793	58022794	58022795	58022796	58022797

Pair of standard positioning keys

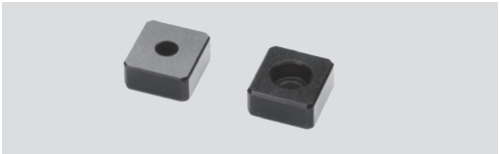

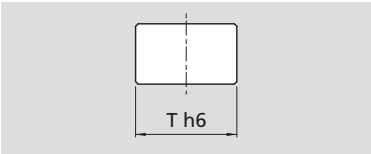

Type	Id. No.	T h6 mm
CV 38 / 60 / 90	58011592	12

Pair of special positioning keys with special dimensions

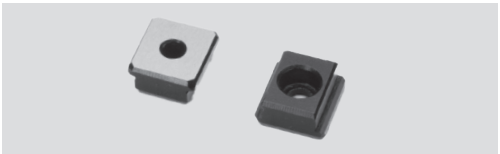

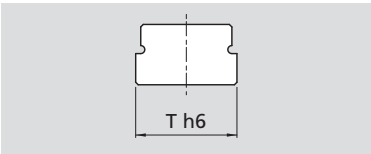

Type	Id. No.					
Th6	12 mm - h6	14 mm - h6	16 mm - h6	18 mm - h6	20 mm - h6	22 mm - h6
CV 38 / 60 / 90	-	58011593	58011594	58011595	58011596	58011597

CV-VCS

Multiple clamping system

■ Steel cross tombstone

Application/customer benefits

- Steel cross tombstone ready to use on horizontal machining centres
- Easy mounting of the multiple clamping system CV / CV-S
- Best use of the machine table

Technical Features

- Prepared to mount of 4 multiple clamping devices CV / CV-S
- Interface for JIS pallets and for zero point clamping systems APS / WPS / ZeroAct

Standard equipment

Tombstone

Technical data

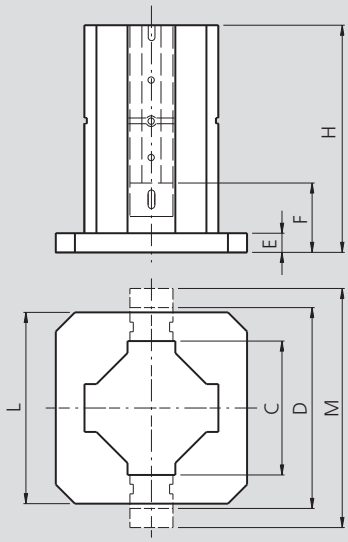

Subject to technical changes.

	Type	Id. No.	C [mm]	D [mm]	E [mm]	F [mm]	H [mm]	L [mm]	M [mm]	Weight [kg]
Steel	CV-VCS 38/60-400	58418011	250	370	40	120	460	400	450	110
	CV-VCS 38/60-500	58418021	250	370			560	400	450	123
	CV-VCS 38/60-500	58418022	300	420			560	500	500	165
	CV-VCS 38/60-630	58418031	250	370			690	400	450	142
	CV-VCS 38/60-630	58418032	300	420			690	500	500	187
	CV-VCS 38/60-630	58418033	380	500			690	630	580	261
	CV-VCS 90-400	58428011	250	390	40	130	460	400	480	110
	CV-VCS 90-500	58428021	250	390			560	400	480	123
	CV-VCS 90-500	58428022	300	440			560	500	530	165
	CV-VCS 90-630	58428031	250	390			690	400	480	142
	CV-VCS 90-630	58428032	300	440			690	500	530	187
	CV-VCS 90-630	58428033	380	520			690	630	610	261
Aluminium	CV-VCS 38/60-630	58427931	250	370	40	120	690	400	450	66
	CV-VCS 38/60-630	58427932	250	370			690	500	450	76
	CV-VCS 38/60-630	58427933	250	500			690	630	580	122
	CV-VCS 90-630	58427931	250	390	40	130	690	400	480	66
	CV-VCS 90-630	58427932	250	390			690	500	480	76
	CV-VCS 90-630	58427933	250	520			690	630	610	122

Multiple clamping system

CV-CN

- Serration 2.5 x 60°
- Quick change system „CLAK-System“ optional available

Application/customer benefits

- Full usability on CNC indexing tables
- Compact design
- Modular system: Extensive range of accessories
- Quick change system „CLAK-System“ for jaws and parallel claks optional available (see page 223)
- Maximum efficiency due to quick change over
- Can be used for single or multiclamp

Technical features

- Serration: 2.5 x 60°
- Jaw width: 38 mm, 60 mm und 90 mm,
  Length: 250 mm, 400 mm, 500 mm and 630 mm
- Optional: Special interface flanges for CNC indexing tables and special adaptation for end supports / tailstocks

Standard equipment

1 column, 4 fixed jaws, 1 blank flange, 1 interface plate for end supports / tailstocks, 1 clamping wrench, 4 workstops

Technical data

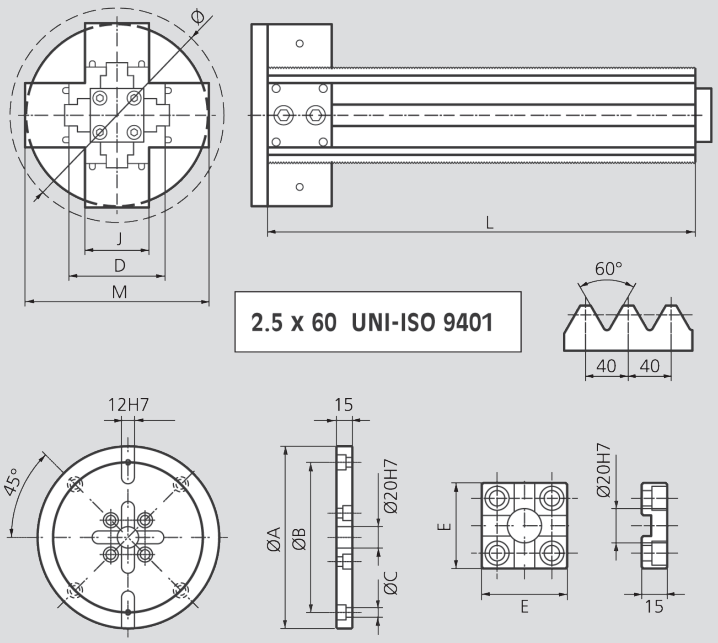

Subject to technical changes.

Type	Id. No.	J [mm]	D [mm]	M [mm]	L [mm]	Ø rot. [mm]	Ø A [mm]	Ø B [mm]	Ø C [mm]	E [mm]	Weight [kg]
CV-CN 60-400	77584111				400						19
CV-CN 60-500	77584112	60	90	170	500	200	170	140	9	50	23
CV-CN 60-630	77584113				630						29
CV-CN 90-400	77584211				400						34
CV-CN 90-500	77584212	90	115	205	500	230	210	180	11	70	41
CV-CN 90-630	77584213				630						50

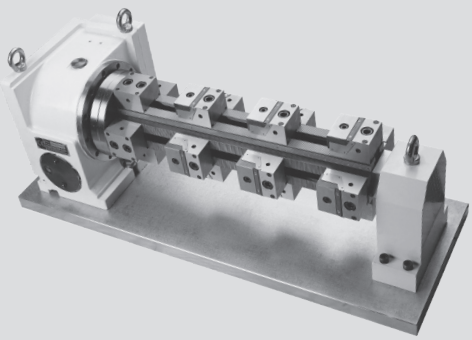

SMW AUTOBLOK

Improved absorption of the transverse forces

CV multiple clamping system

Serration 2.5 x 60°

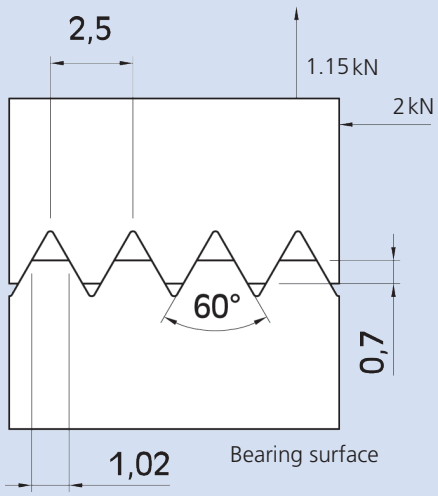

Competitor

Serration 1.5 x 90°

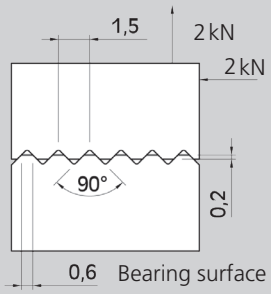

Serration 2.0 x 90°

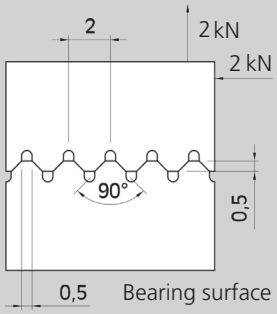

Serration 2.0 x 90°

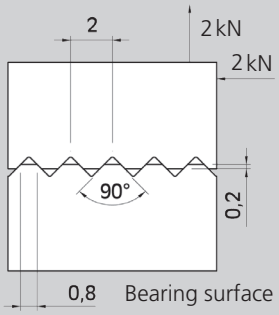

Customized tombstones

The intelligently designed modular system of the **RT tombstones** offers an extended product range with the shortest possible delivery times. The tombstones can also be individually equipped with a wide variety of stationary clamping systems and delivered ready for operation. Suitable geometries offer optimum accessibility to the machine spindle with the highest accuracy and precision.
The **RT tombstones** are available in steel (hardened steel if required), cast iron or aluminum version and offer maximum rigidity and excellent vibration damping. The clamping areas are pre-milled, fine milled or provided with grid bore holes, depending on the customer's requirements. In addition to the extensive catalogue, special sizes with short delivery times are also available upon request.
The **RT tombstones** are suitable for standard machines according to DIN 55201 or JIS 6337-1980.

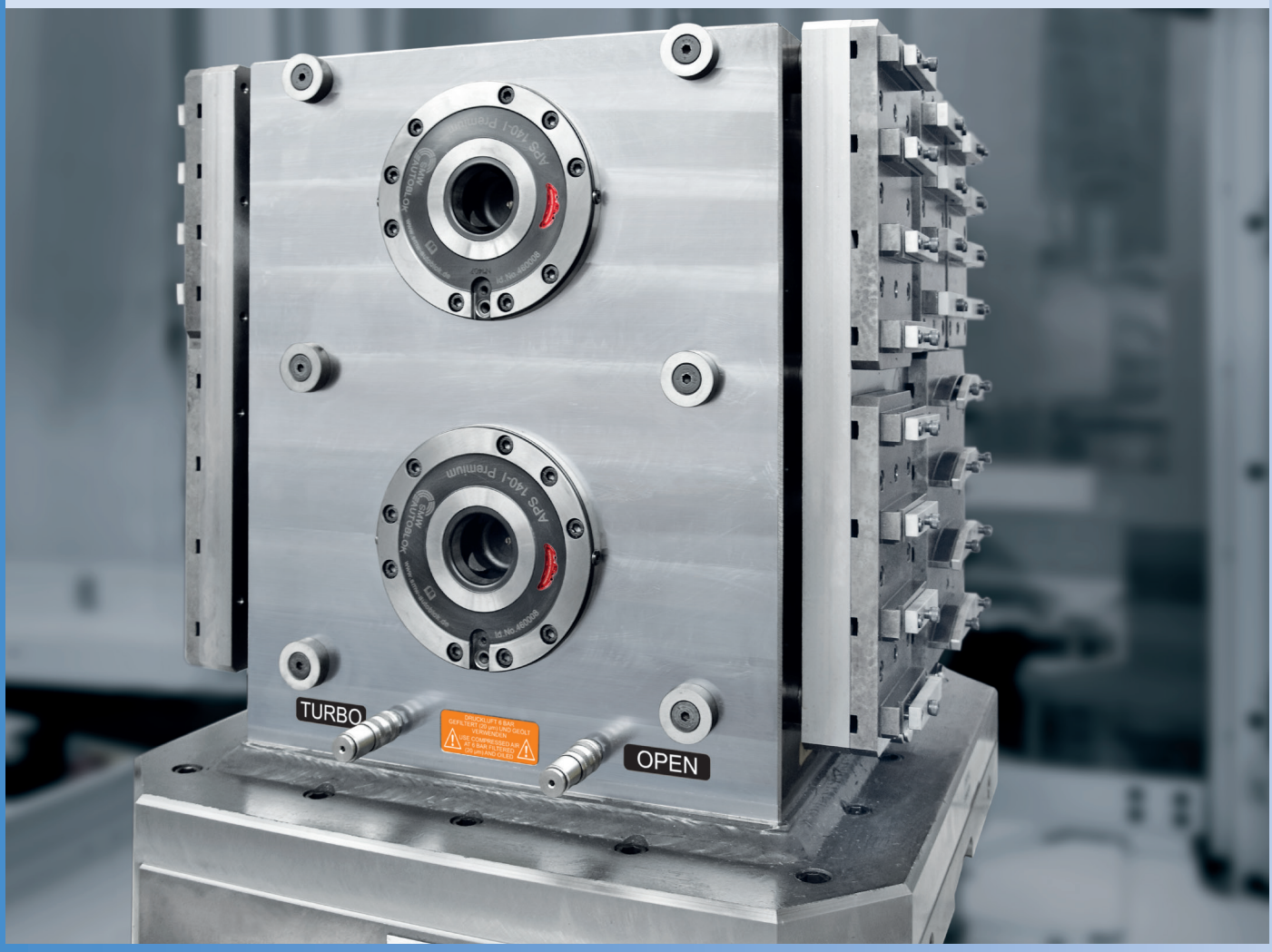

Tombstones

Page 232

RT

Tombstones, angle plates, plates and subplates

- Modular system: Wide range of standard products
- Highest rigidity and anti-vibration design
- Best accessibility of the machine spindle to the workpiece
- Highest accuracy and precision

5

RT

Tombstones

- Modular system
- Highest accuracy and precision

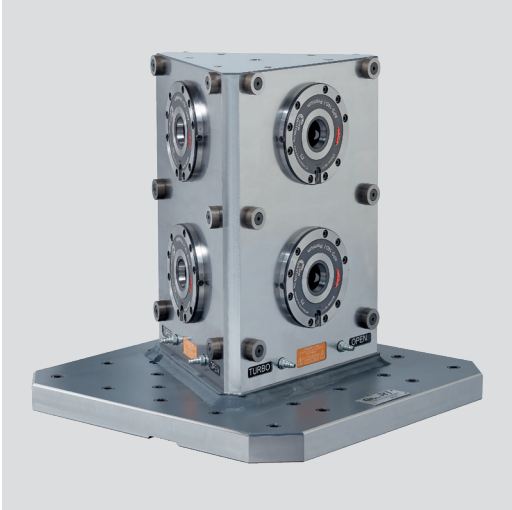

Application/customer benefits

- Modular system: Wide range of standard products and shortest delivery times
- Highest rigidity and anti-vibration design
- Optimal accessibility of the machine spindle to the workpiece
- Highest accuracy and precision
- High quality thread insert bushes used for grid versions

Technical features

- Steel (optional hardened), aluminium or cast iron
- Suitable for standard machine pallets type DIN 55201 and JIS 6337-1980
- Raw, milled with / without grid bore holes
- Special sizes on request

Overview

Product picture	Description	Page
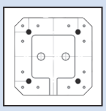	Dimensions of standard adaptation for machine tools pallet	231
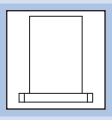	Manufacturing tolerances	231
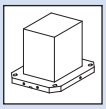	Tombstones square	235
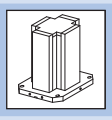	Tombstones cross	238
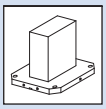	Tombstones rectangle	240
	Tombstones triangle	243
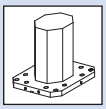	Tombstones octagon	231
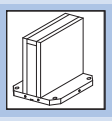	Crankwebs	246
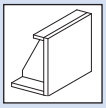	Angle plates	250
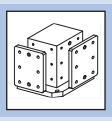	Plates	251
	Subplates	253

- Dimensions of standard adaptation
- Manufacturing tolerances

Dimensions of standard adaptation for machine tool pallets

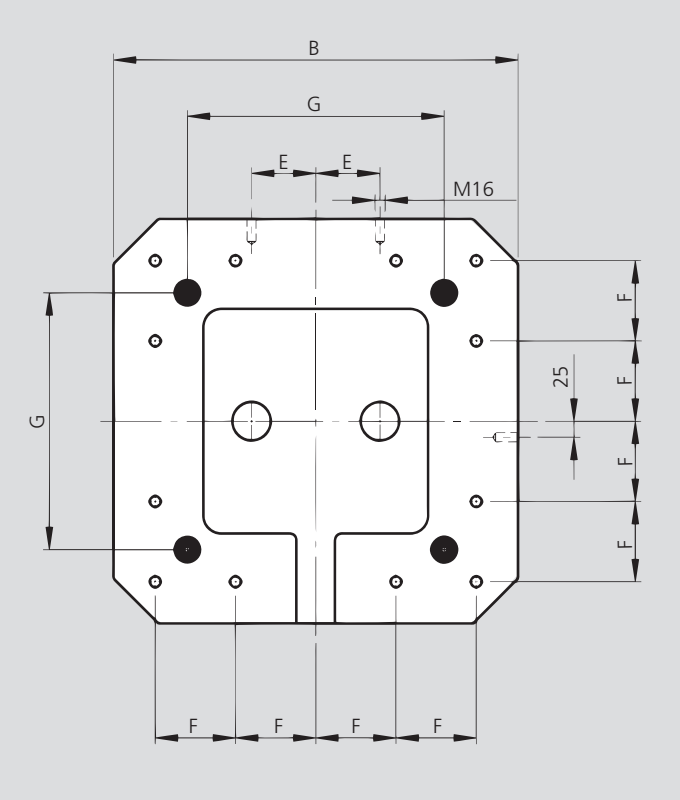

B [mm]	E [mm]	F [mm]	G [mm]
300	on request	on request	on request
400	55	80	250
500	75	100	250
630	100	125	420
800	135	160	420

Manufacturing tolerances

Subject to technical changes.

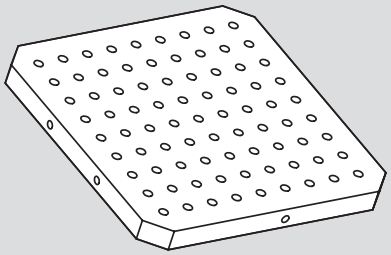

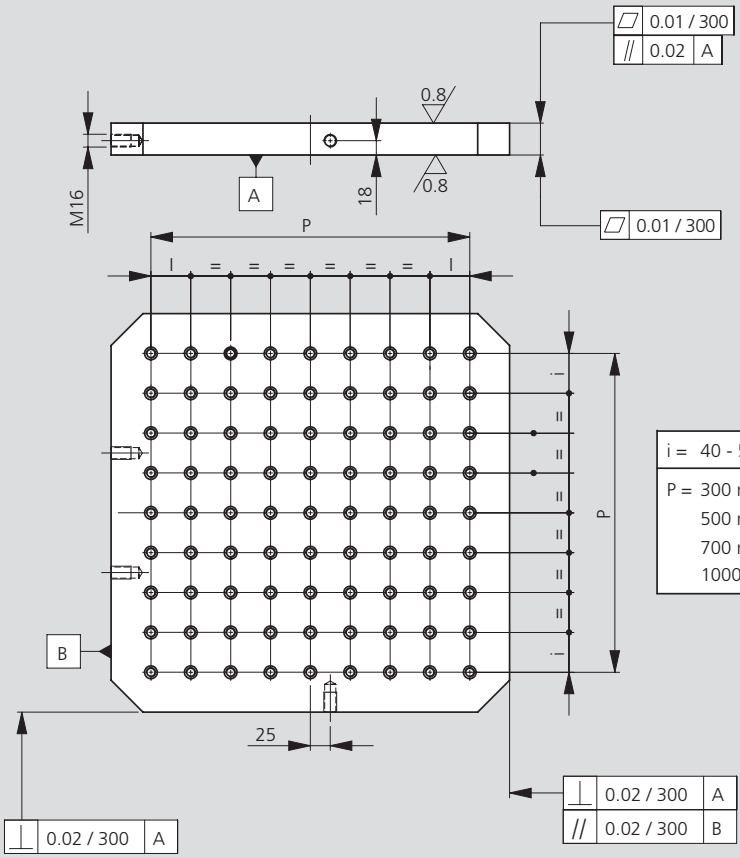

i =	40 - 50 mm	± 0.01
P =	300 mm	± 0.02
	500 mm	± 0.03
	700 mm	± 0.04
	1000 mm	± 0.05

Standard

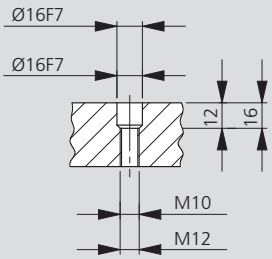

on request

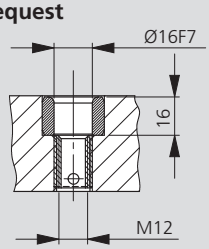

Tombstones milled

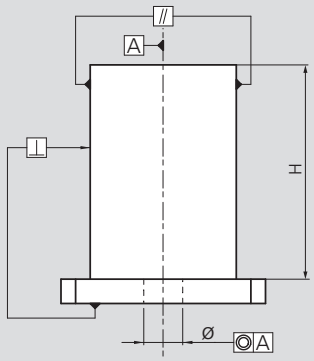

H	⊥	//	◎
500 mm	0.020	0.020	0.020
1000 mm	0.035	0.035	0.035

Subject to technical changes.

Tombstones with grid bore holes for plates

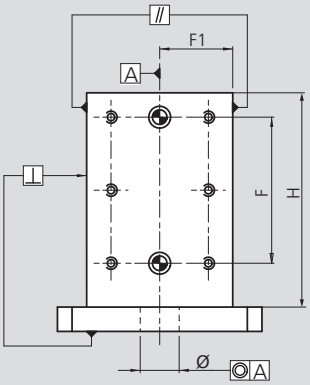

H	⊥	//	◎
500 mm	0.020	0.020	0.020
1000 mm	0.035	0.035	0.035

F=	300 mm	± 0.02
	500 mm	± 0.03
	700 mm	± 0.04
F1=	500 mm	± 0.015
	1000 mm	± 0.025

Subject to technical changes.

Tombstones with grid bore holes

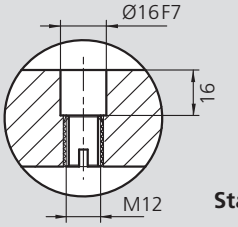

Standard for cast iron

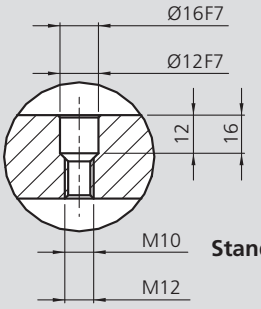

Standard steel and aluminium

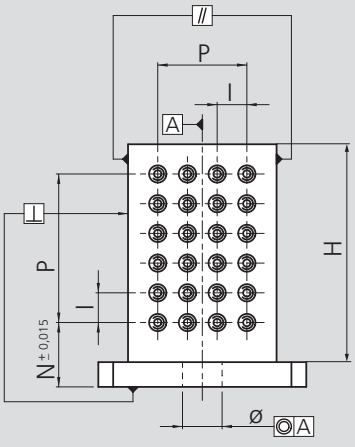

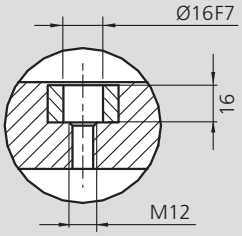

H	⊥	//	◎
500 mm	0.020	0.020	0.020
1000 mm	0.035	0.035	0.035

Further grid version for aluminium with steel sleeve insert

i =	40 - 50 mm	± 0.01
P =	300 mm	± 0.02
	500 mm	± 0.03
	700 mm	± 0.04
	1000 mm	± 0.05

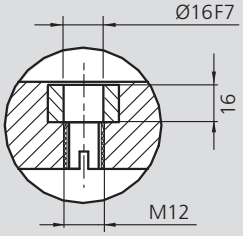

Further grid version for cast iron with steel sleeve and thread insert

Subject to technical changes.

Tombstones square

RT

- Steel, aluminum or cast iron
- Raw or milled

Subject to technical changes.

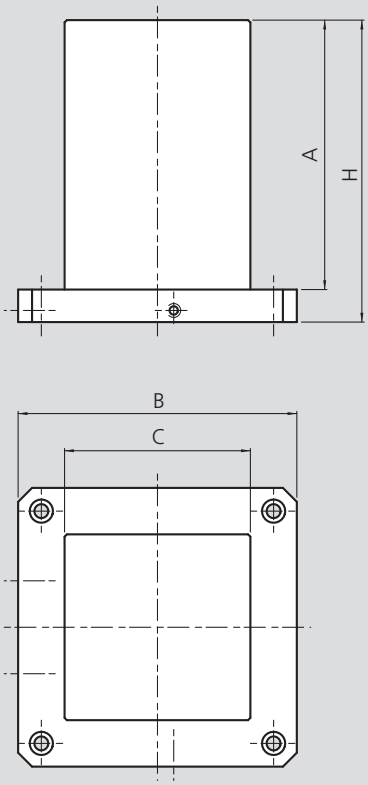

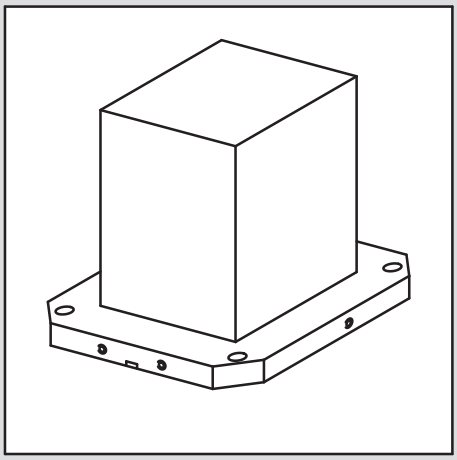

Tombstones square – STEEL

Raw Id. No.	Milled Id. No.	A [mm]	B [mm]	C [mm]	H [mm]	Weight [kg]
57006006	57006005	415	300	160	455	81
57006036	57006035	620	400	250	660	205
57006056	57006055	660	500	350	700	318
57006091	57006090	815	630	450	860	524
57006121	57006120	945	800	550	1000	795

Tombstones square – ALUMINUM

Id. No.	A [mm]	B [mm]	C [mm]	H [mm]	Weight [kg]
57306035	620	400	250	660	80
57306055	660	500	350	700	137
57306090	815	630	450	860	253

Tombstones square – CAST IRON

Raw Id. No.	Milled Id. No.	A [mm]	B [mm]	C [mm]	H [mm]	Weight [kg]
57406036	57406035	615	400	250	660	208
57406056	57406055	655	500	350	700	329
57406091	57406090	810	630	450	860	607
57406121	57406120	945	800	550	1000	808

Special sizes on request.

RT

Tombstones square

- Steel, aluminum or cast iron
- With grid bore holes for plates

Subject to technical changes.

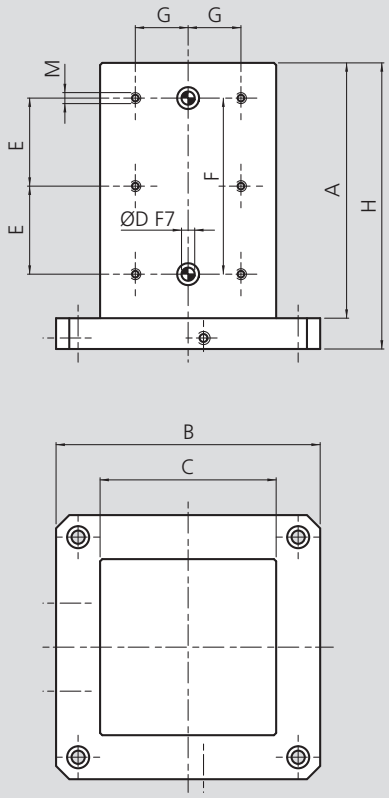

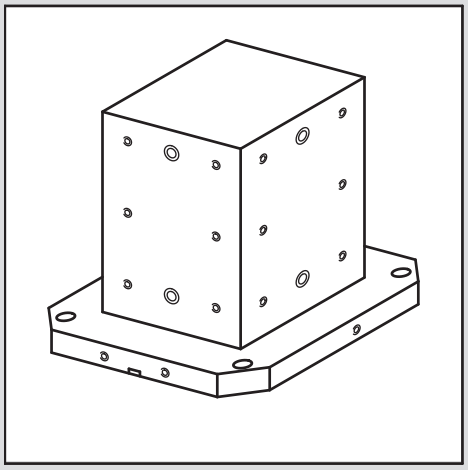

Tombstones square – STEEL

Id. No.	A [mm]	B [mm]	C [mm]	H [mm]	Ø D [mm]	M	E [mm]	F [mm]	G [mm]	Weight [kg]
57020015	415	300	160	455	12	M10	150	300	40	81
57020045	620	400	250	660	16	M12	250	500	75	205
57020065	660	500	350	700	16	M12	250	500	125	318
57020100	815	630	450	860	16	M12	350	700	175	524
57020130	945	800	550	1000	16	M12	400	800	225	795

Tombstones square – ALUMINUM

Id. No.	A [mm]	B [mm]	C [mm]	H [mm]	Ø D [mm]	M	E [mm]	F [mm]	G [mm]	Weight [kg]
57312045	620	400	250	660	16	M12	250	500	75	80
57312065	660	500	350	700	16	M12	250	500	125	137
57312100	815	630	450	860	16	M12	350	700	175	253

Tombstones square – CAST IRON

Id. No.	A [mm]	B [mm]	C [mm]	H [mm]	Ø D [mm]	M	E [mm]	F [mm]	G [mm]	Weight [kg]
57412045	615	400	250	660	16	M12	250	500	75	208
57412065	655	500	350	700	16	M12	250	500	125	329
57412100	810	630	450	860	16	M12	350	700	175	607
57412130	945	800	550	1000	16	M12	400	800	225	808

Special sizes on request.

Tombstones square

RT

- Steel, aluminum or cast iron
- With grid bore holes for plates

Subject to technical changes.

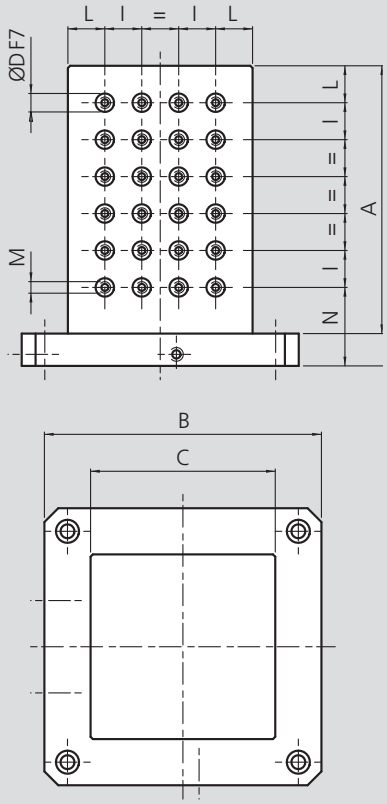

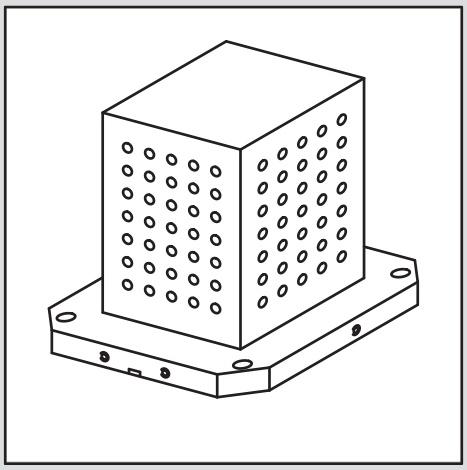

Tombstones square – STEEL

Id. No.	A [mm]	B [mm]	C [mm]	H [mm]	Ø D [mm]	M	I [mm]	L [mm]	N [mm]	Weight [kg]
57030015	415	300	160	455	12	M10	40	40	95	79
57030045	620	400	250	660	16	M12	50	50	110	198
57030065	660	500	350	700	16	M12	50	50	100	307
57030100	815	630	450	860	16	M12	50	50	110	506
57030130	945	800	550	1000	16	M12	50	50	100	768

Tombstones square – ALUMINUM

Id. No.	A [mm]	B [mm]	C [mm]	H [mm]	Ø D [mm]	M	I [mm]	L [mm]	N [mm]	Weight [kg]
57313045	620	400	250	660	16	M12	50	50	110	78
57313065	660	500	350	700	16	M12	50	50	100	133
57313100	815	630	450	860	16	M12	50	50	110	246

Tombstones square – CAST IRON

Id. No.	A [mm]	B [mm]	C [mm]	H [mm]	Ø D [mm]	M	I [mm]	L [mm]	N [mm]	Weight [kg]
57413045	615	400	250	660	16	M12	50	50	110	208
57413065	655	500	350	700	16	M12	50	50	100	329
57413100	810	630	450	860	16	M12	50	50	110	522
57413130	945	800	550	1000	16	M12	50	50	100	808

Special sizes on request.

RT

Tombstones cross

- Steel, aluminum
- Milled

Subject to technical changes.

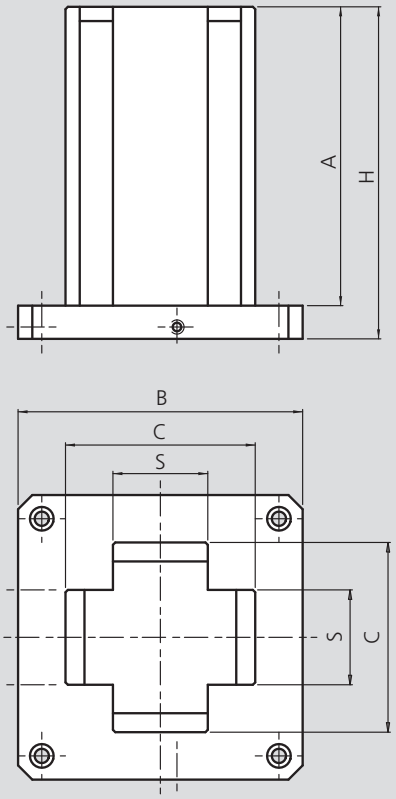

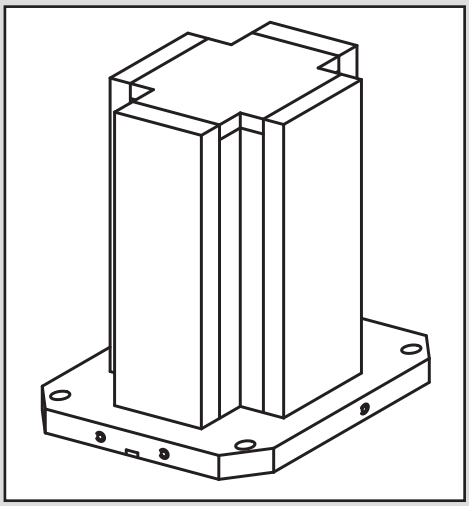

Tombstones cross – STEEL

Id. No.	A [mm]	B [mm]	C [mm]	H [mm]	S [mm]	Weight [kg]
57061010	540	400	300	580	150	208
57061015	540	500	300	580	150	236
57061020	795	630	550	840	150	451
57061025	625	500	350	670	200	296
57061030	625	630	350	670	200	356
57061035	650	400	250	690	100	142
57061040	650	500	300	690	100	187

Tombstones cross – ALUMINUM

Id. No.	A [mm]	B [mm]	C [mm]	H [mm]	S [mm]	Weight [kg]
57316110	540	400	300	580	150	82
57316115	540	500	300	580	150	92
57316135	650	400	250	690	100	79
57316140	650	500	250	690	100	88

Special sizes on request.

Tombstones cross

RT

- Steel, aluminum
- With grid bore holes for plates

Subject to technical changes.

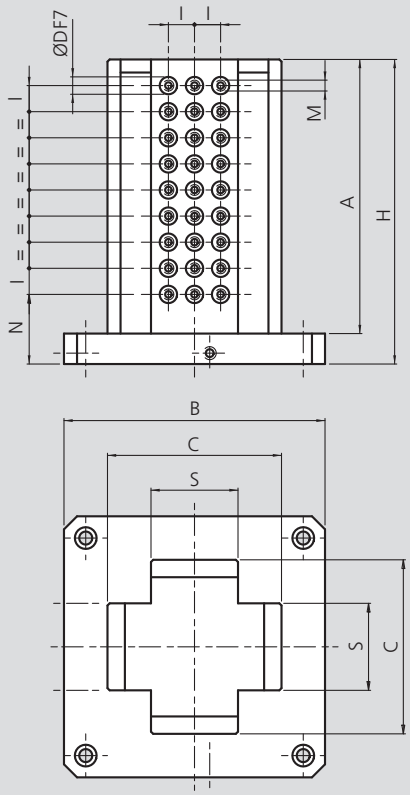

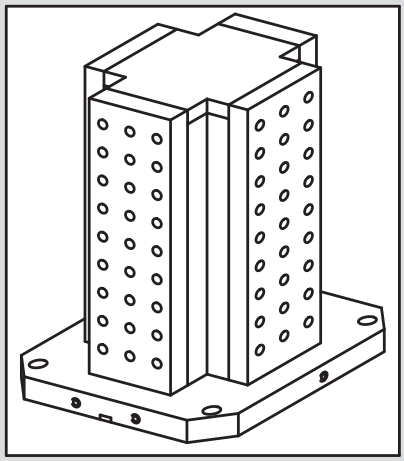

Tombstones cross – STEEL

Id. No.	A [mm]	B [mm]	C [mm]	H [mm]	Ø D [mm]	M	I [mm]	N [mm]	S [mm]	Weight [kg]
57060010	540	400	300	580	16	M12	50	85	150	208
57060015	540	500	300	580	16	M12	50	85	150	236
57060020	795	630	550	840	16	M12	50	100	150	451
57060025	625	500	350	670	16	M12	50	120	200	296
57060030	625	630	350	670	16	M12	50	120	200	356

Tombstones cross – ALUMINUM

Id. No.	A [mm]	B [mm]	C [mm]	H [mm]	Ø D [mm]	M	I [mm]	N [mm]	S [mm]	Weight [kg]
57316010	540	400	300	580	16	M12	50	85	150	82
57316015	540	500	300	580	16	M12	50	85	150	92

Special sizes on request.

RT

Tombstones rectangle cube

■ Steel, milled

Subject to technical changes.

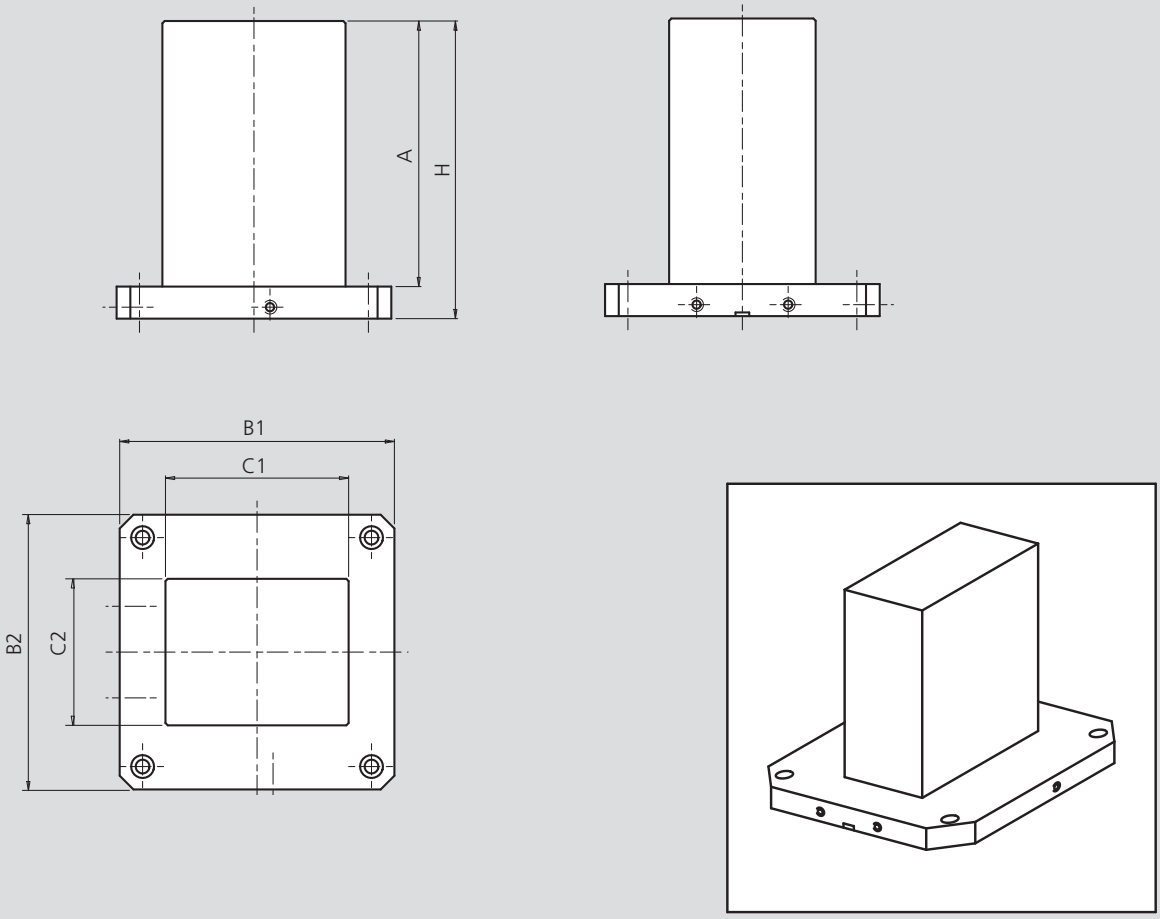

Tombstones rectangle cube – STEEL

Id. No.	A [mm]	B1 [mm]	B2 [mm]	C1 [mm]	C2 [mm]	H [mm]	Weight [kg]
57007005	615	500	400	350	250	655	250
57007010	615	500	500	350	250	655	265
57007025	615	630	500	450	350	660	367
57007030	615	630	630	450	350	660	395

Special sizes on request.

Tombstones rectangle cube

RT

- Steel
- With grid bore hole for plates

Subject to technical changes.

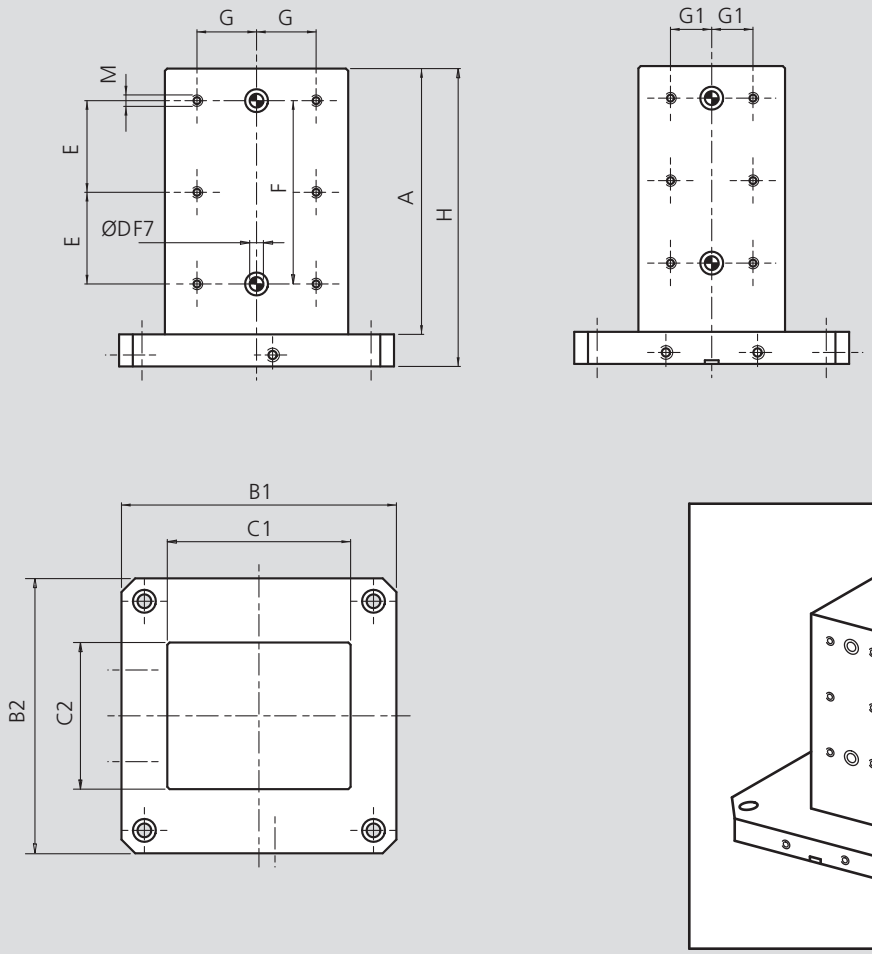

Tombstones rectangle cube – STEEL

Id. No.	A [mm]	B1 [mm]	B2 [mm]	C1 [mm]	C2 [mm]	H [mm]	Ø D [mm]	M	E [mm]	F [mm]	G [mm]	G1 [mm]	Weight [kg]
57070015	615	500	400	350	250	655	16	M12	250	500	125	75	250
57070020	615	500	500	350	250	655	16	M12	250	500	125	75	265
57070035	615	630	500	450	350	660	16	M12	250	500	175	125	367
57070040	615	630	630	450	350	660	16	M12	250	500	175	125	395

Special sizes on request.

RT

Tombstones rectangle cube

- Steel
- With grid bore hole for plates

Subject to technical changes.

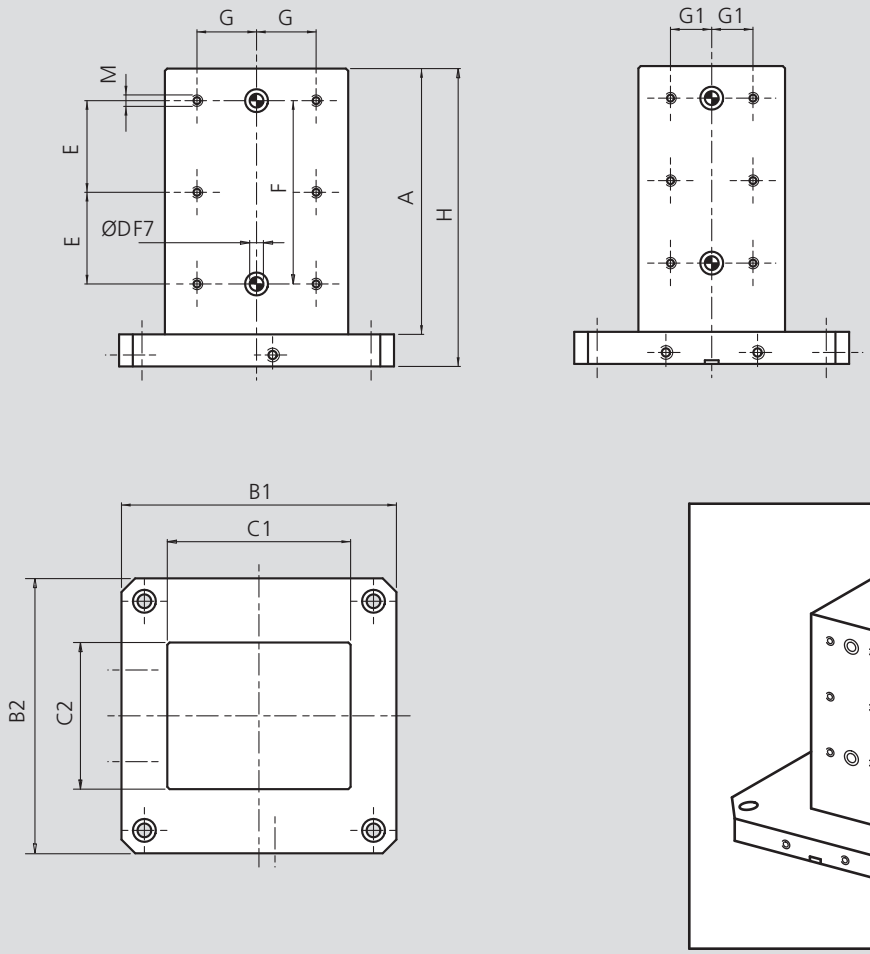

Tombstones rectangle cube – STEEL

Id. No.	A [mm]	B1 [mm]	B2 [mm]	C1 [mm]	C2 [mm]	H [mm]	Ø D [mm]	M	E [mm]	F [mm]	G [mm]	G1 [mm]	Weight [kg]
57070015	615	500	400	350	250	655	16	M12	250	500	125	75	250
57070020	615	500	500	350	250	655	16	M12	250	500	125	75	265
57070035	615	630	500	450	350	660	16	M12	250	500	175	125	367
57070040	615	630	630	450	350	660	16	M12	250	500	175	125	395

Special sizes on request.

Tombstones triangle tower

RT

- Steel
- With grid bore holes

Subject to technical changes.

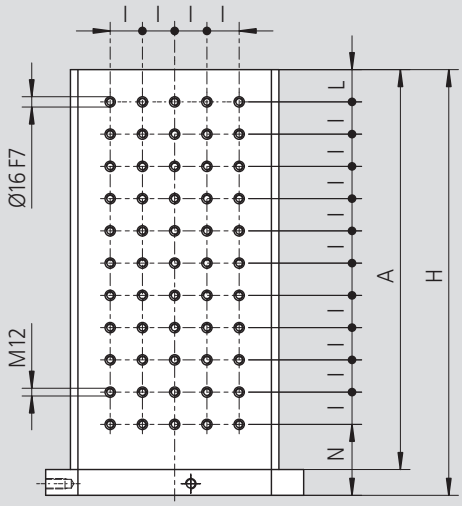

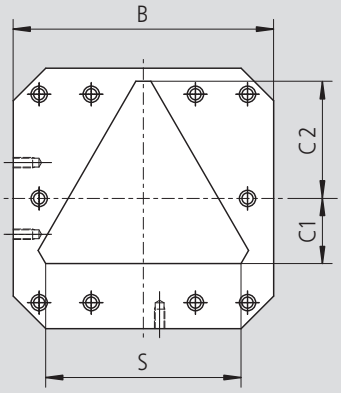

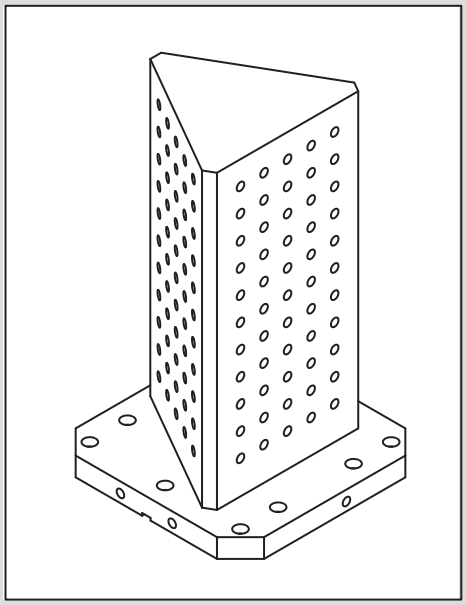

Tombstones triangle tower – STEEL

Id. No.	A [mm]	B [mm]	C1 [mm]	C2 [mm]	H [mm]	I [mm]	L [mm]	N [mm]	S [mm]	Weight [kg]
57171010	620	400	100	180	660	50	50	110	300	200
57171020	620	500	100	180	660	50	50	110	300	227

Special sizes on request.

RT

Tombstones octagon tower

- Steel or aluminum
- Milled

Subject to technical changes.

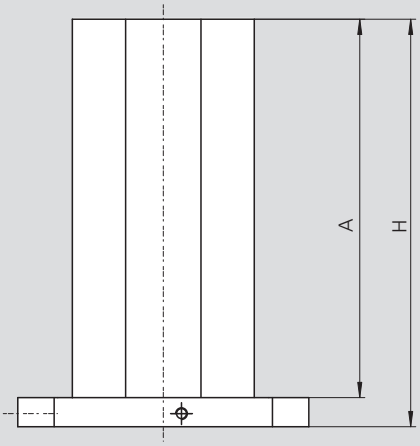

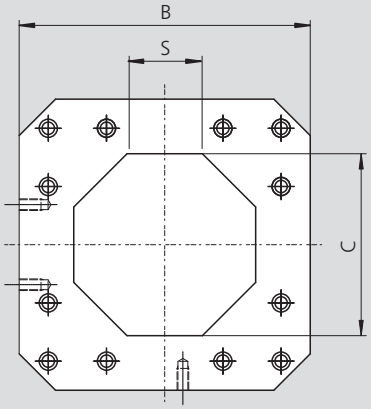

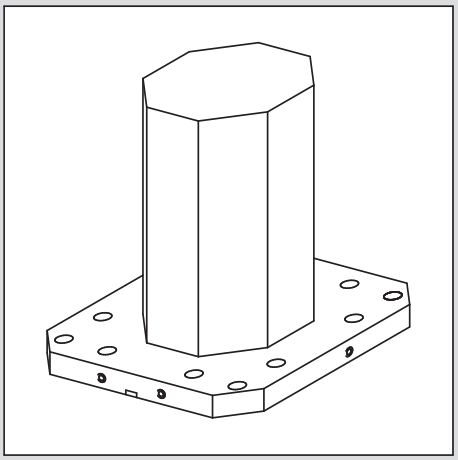

Tombstones octagon tower – STEEL

Id. No.	A [mm]	B [mm]	C [mm]	H [mm]	S [mm]	Weight [kg]
57004000	650	400	250	690	100	185
57004010	650	500	250	690	100	213
57004020	650	630	380	690	155	351

Tombstones octagon tower – ALUMINUM

Id. No.	A [mm]	B [mm]	C [mm]	H [mm]	S [mm]	Weight [kg]
57304000	650	400	250	690	100	79
57304010	650	500	250	690	100	88
57304020	650	630	380	690	155	138

Special sizes on request.

Tombstones octagon tower

RT

- Steel and aluminum
- With grid bore holes

Subject to technical changes.

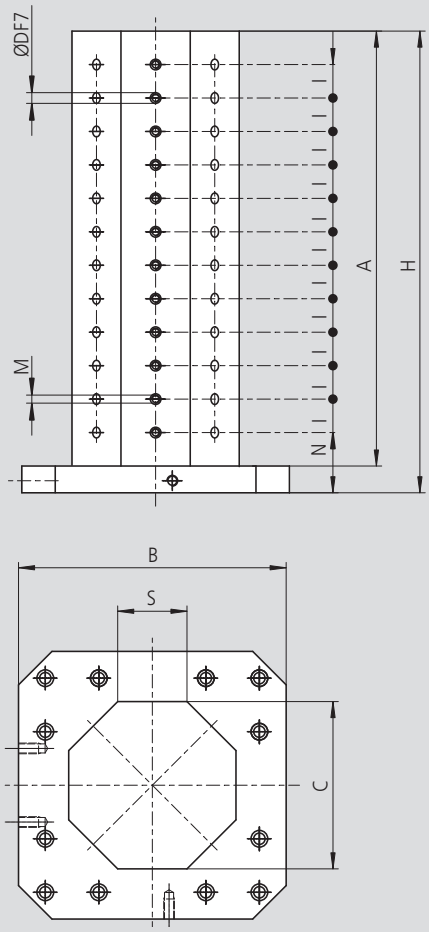

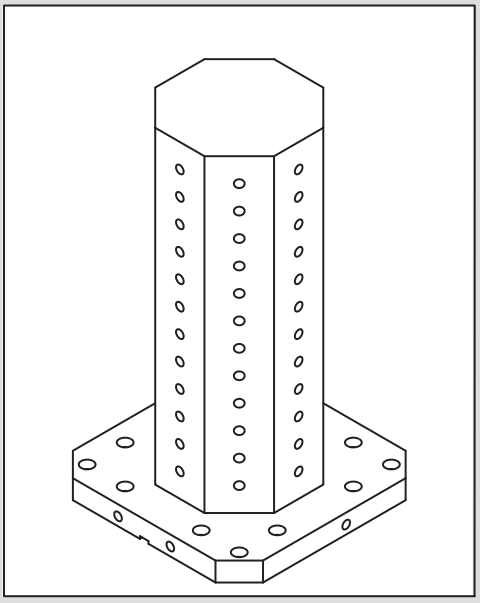

Tombstones octagon tower – STEEL

Id. No.	A [mm]	B [mm]	C [mm]	H [mm]	Ø D [mm]	M	I [mm]	N [mm]	S [mm]	Weight [kg]
57173010	650	400	250	690	16	M12	50	90	100	181
57173020	650	500	250	690	16	M12	50	90	100	209
57173030	650	630	380	690	16	M12	50	90	155	339

Tombstones octagon tower – ALUMINUM

Id. No.	A [mm]	B [mm]	C [mm]	H [mm]	Ø D [mm]	M	I [mm]	N [mm]	S [mm]	Weight [kg]
57336010	650	400	250	690	16	M12	50	90	100	78
57336020	650	500	250	690	16	M12	50	90	100	87
57336030	650	630	380	690	16	M12	50	90	155	136

Special sizes on request.

RT

Crankwebs

- Steel, aluminum or cast iron
- Raw or milled

Subject to technical changes.

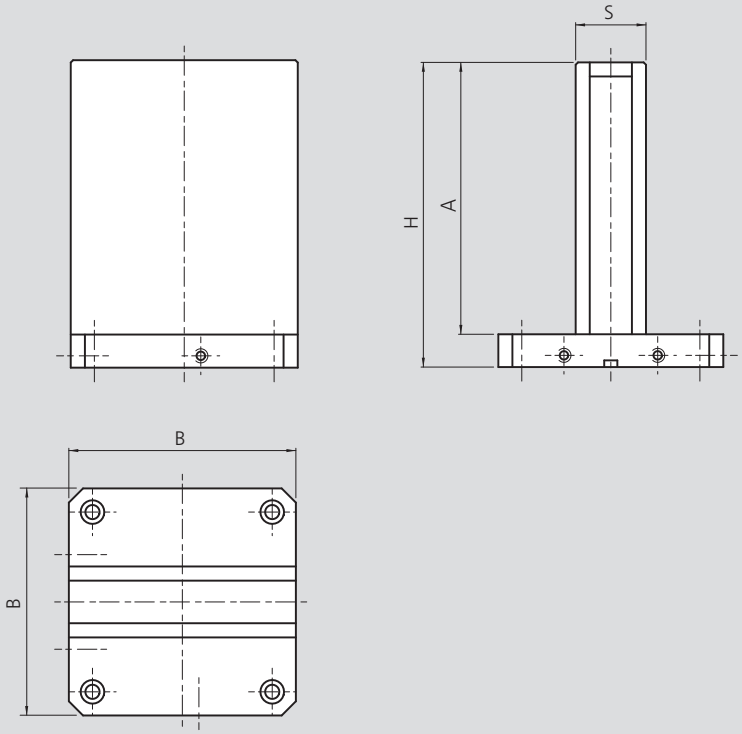

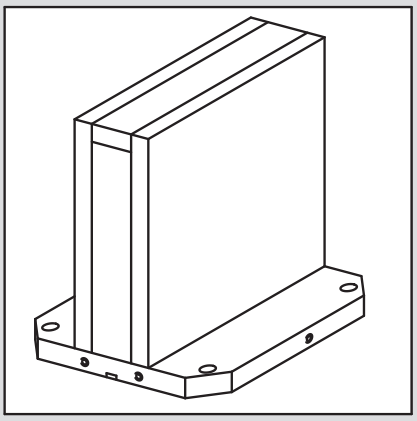

Crankweb – STEEL

Raw Id. No.	Milled Id. No.	A [mm]	B [mm]	H [mm]	S [mm]	Weight [kg]
57009026	57009025	620	400	660	150	212
57009046	57009045	660	500	700	150	287
57009066	57009065	815	630	860	200	482
57009091	57009090	945	800	1000	260	810

Crankweb – ALUMINUM

Id. No.	A [mm]	B [mm]	H [mm]	S [mm]	Weight [kg]
57309025	620	400	660	150	77
57309045	660	500	700	150	103
57309065	815	630	860	200	172

Crankweb – CAST IRON

Raw Id. No.	Milled Id. No.	A [mm]	B [mm]	H [mm]	S [mm]	Weight [kg]
57409026	57409025	615	400	660	150	185
57409046	57409045	655	500	700	150	247
57409066	57409065	810	630	860	200	448
57409091	57409090	945	800	1000	300	810

Special sizes on request.

Crankwebs

RT

- Steel, aluminum or cast iron
- For plates

Subject to technical changes.

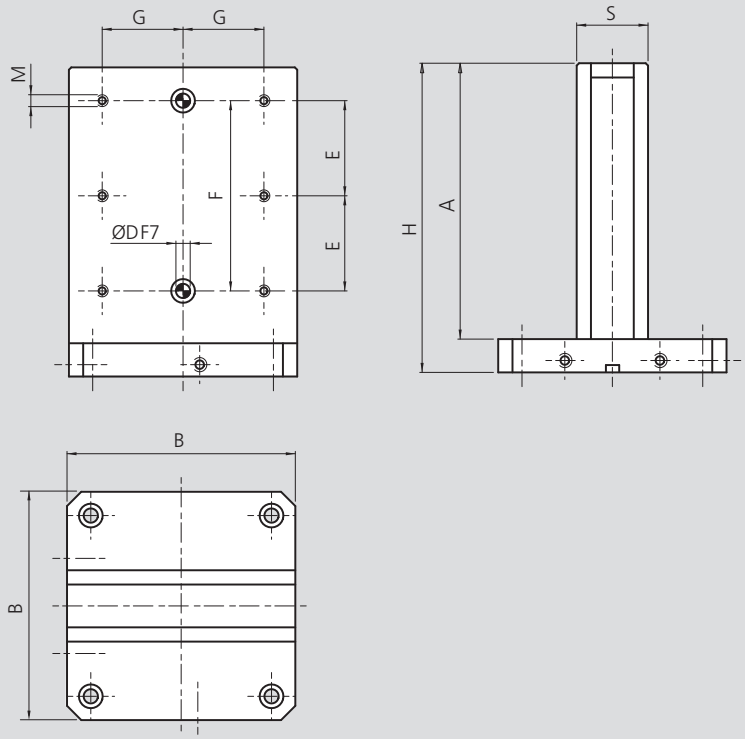

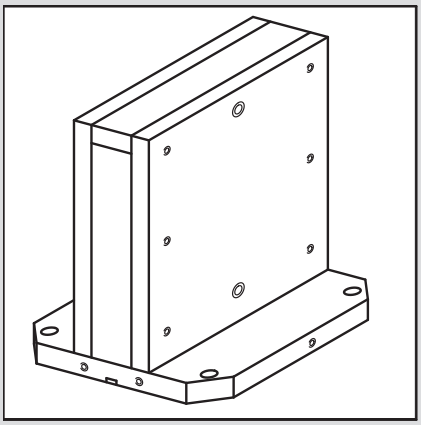

Crankweb – STEEL

Id. No.	A [mm]	B [mm]	H [mm]	Ø D [mm]	M	E [mm]	F [mm]	G [mm]	S [mm]	Weight [kg]
57041035	620	400	660	16	M12	250	500	150	150	212
57041055	660	500	700	16	M12	250	500	200	150	287
57041075	815	630	860	16	M12	350	700	250	200	482
57041100	945	800	1000	16	M12	100	800	350	260	810

Crankweb – ALUMINUM

Id. No.	A [mm]	B [mm]	H [mm]	Ø D [mm]	M	E [mm]	F [mm]	G [mm]	S [mm]	Weight [kg]
57328035	620	400	660	16	M12	250	500	150	150	77
57328055	660	500	700	16	M12	250	500	200	150	103
57328075	815	630	860	16	M12	350	700	250	200	180

Crankweb – CAST IRON

Id. No.	A [mm]	B [mm]	H [mm]	Ø D [mm]	M	E [mm]	F [mm]	G [mm]	S [mm]	Weight [kg]
57428035	615	400	660	16	M12	250	500	150	150	185
57428055	655	500	700	16	M12	250	500	200	150	247
57428075	810	630	860	16	M12	350	700	250	200	448
57428100	945	800	1000	16	M12	400	800	350	300	810

Special sizes on request.

RT

Crankwebs

- Steel, aluminum or cast iron
- With grid bore holes

Subject to technical changes.

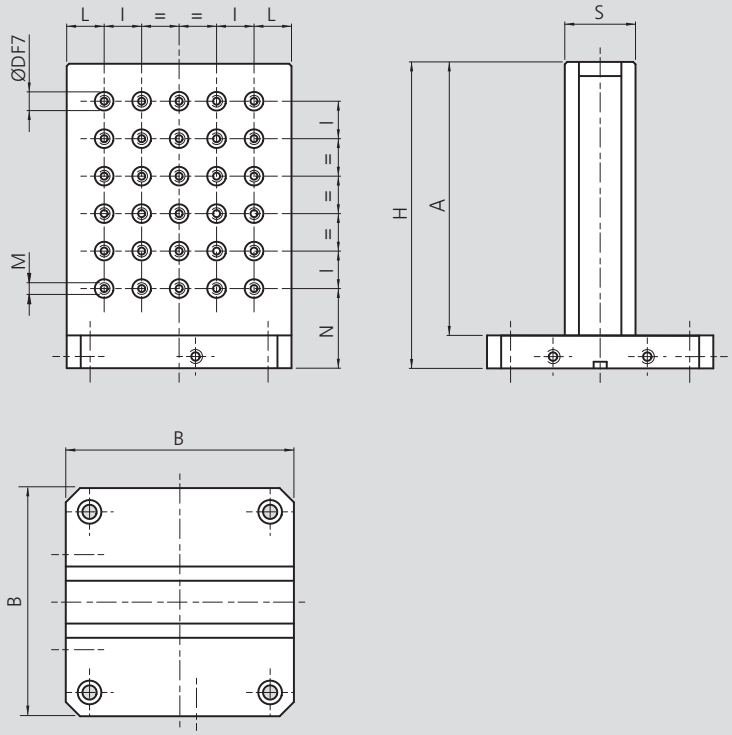

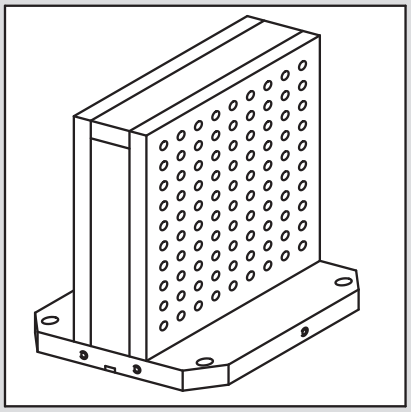

Crankweb – STEEL

Id. No.	A [mm]	B [mm]	H [mm]	Ø D [mm]	M	I [mm]	L [mm]	N [mm]	S [mm]	Weight [kg]
57040035	620	400	660	16	M12	50	50	110	150	206
57040055	660	500	700	16	M12	50	50	100	150	279
57040075	815	630	860	16	M12	50	40	110	200	468
57040100	945	800	1000	16	M12	50	50	100	260	787

Crankweb – ALUMINUM

Id. No.	A [mm]	B [mm]	H [mm]	Ø D [mm]	M	I [mm]	L [mm]	N [mm]	S [mm]	Weight [kg]
57314035	620	400	660	16	M12	50	50	110	150	74
57314055	660	500	700	16	M12	50	50	100	150	100
57314075	815	630	860	16	M12	50	40	110	200	170

Crankweb – CAST IRON

Id. No.	A [mm]	B [mm]	H [mm]	Ø D [mm]	M	I [mm]	L [mm]	N [mm]	S [mm]	Weight [kg]
57414035	615	400	660	16	M12	50	50	110	150	180
57414055	655	500	700	16	M12	50	50	100	150	240
57414075	810	630	860	16	M12	50	40	110	200	440
57414100	945	800	1000	16	M12	50	50	100	300	790

Special sizes on request.

Crankwebs

RT

- Steel and aluminum
- Made of full metal

Subject to technical changes.

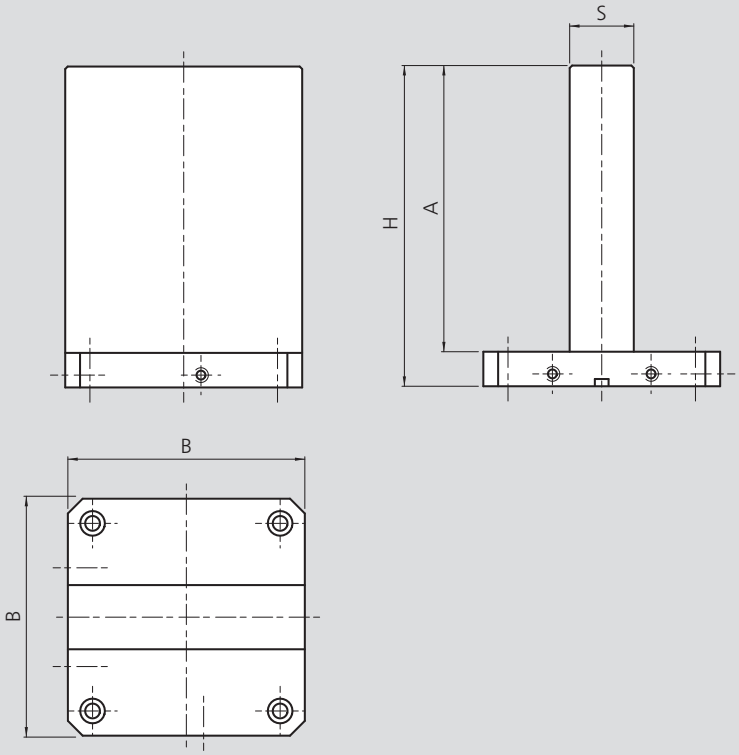

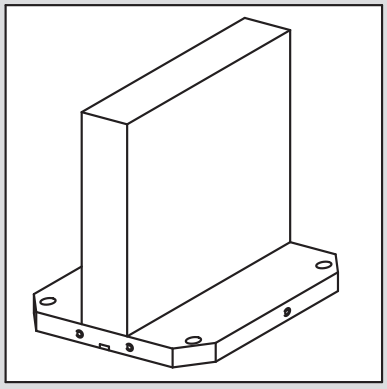

Crankweb – STEEL

Id. No.	A [mm]	B [mm]	H [mm]	S [mm]	Weight [kg]
57008030	370	320	410	80	107
57008040	480	400	520	100	201
57008050	580	500	620	100	306

Crankweb – ALUMINUM

Id. No.	A [mm]	B [mm]	H [mm]	S [mm]	Weight [kg]
57308020	270	250	310	80	23

Special sizes on request.

RT

Angle plates

- Steel
- Milled

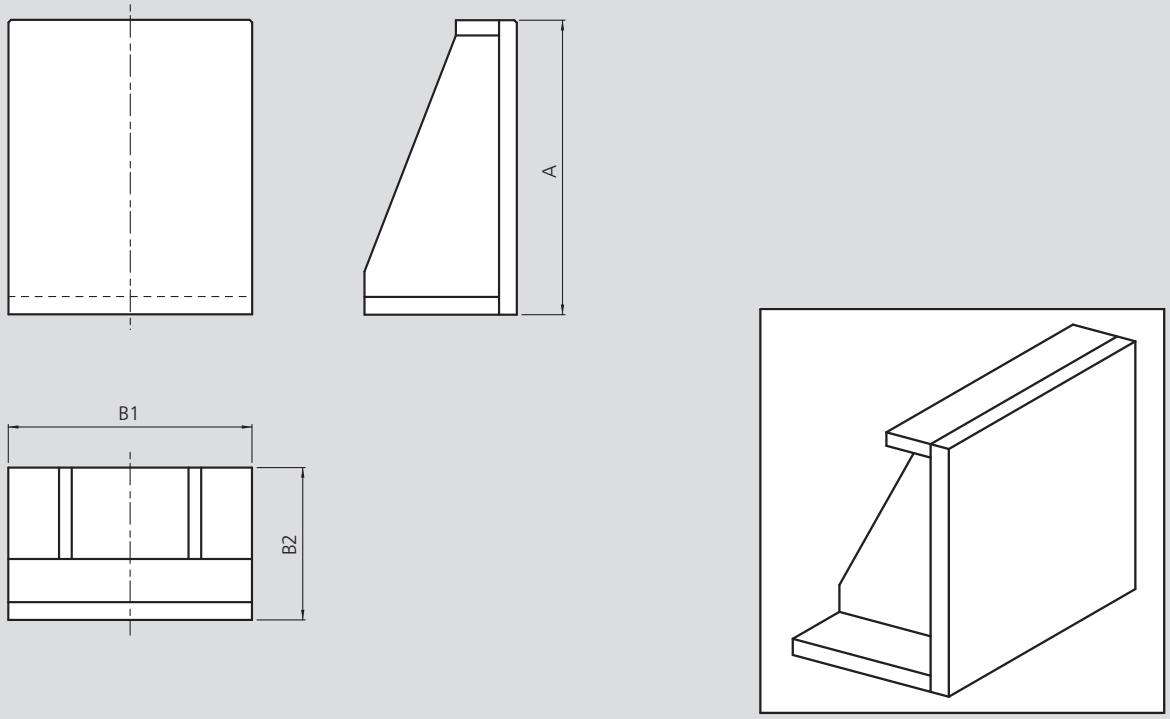

Subject to technical changes.

Angle plates – STEEL

Id. No.	A [mm]	B1 [mm]	B2 [mm]	Weight [kg]
57005030	360	320	230	66
57005040	460	400	330	130
57005050	510	400	330	139
57005060	510	500	330	182
57005070	560	500	330	196
57005080	560	630	430	305
57005090	660	630	430	343

Special sizes on request.

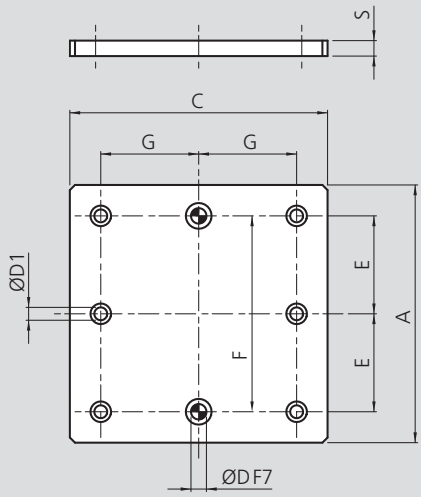

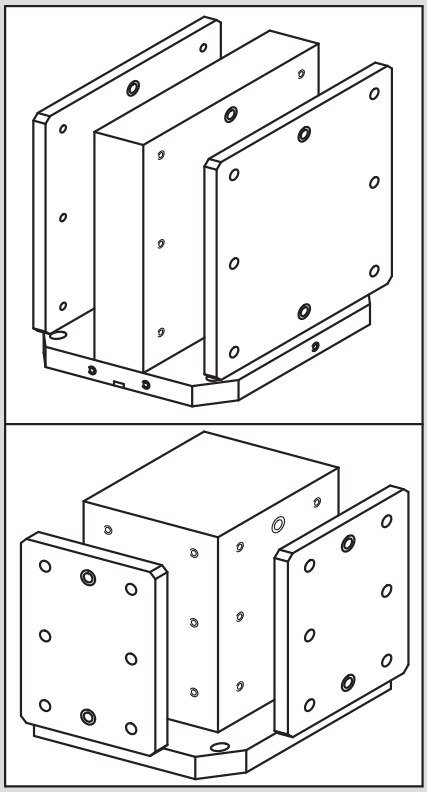

Subject to technical changes.

Plates – STEEL

Id. No.	C [mm]	A [mm]	Ø D [mm]	Ø D1 [mm]	E [mm]	F [mm]	G [mm]	S [mm]	Weight [kg]
57120025	160	400	12	11	150	300	40	20	10
57120090	250	600	16	13	250	500	75	25	29
57120130	350	600	16	13	250	500	125	25	41
57120155	400	600	16	13	250	500	150	25	47
57120175	450	800	16	13	350	700	175	25	70.5
57120195	500	600	16	13	250	500	200	25	58.5
57120210	550	800	16	13	350	700	225	25	86
57120235	630	800	16	13	350	700	250	25	98.5
57120250	800	800	16	13	350	700	350	30	149

Special sizes on request.

RT

Plates

- Steel grinded
- With grid bore holes

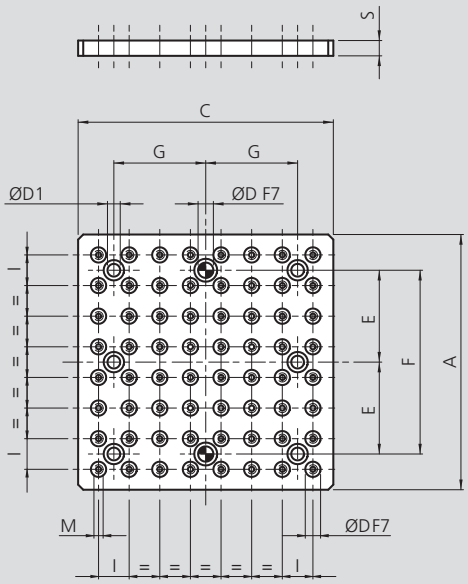

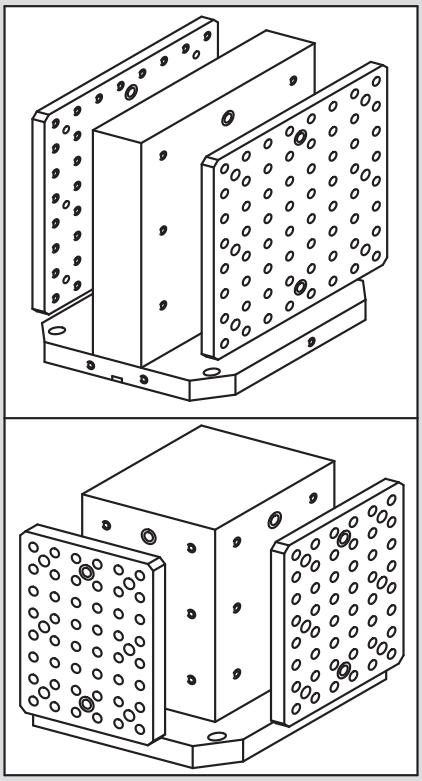

Subject to technical changes.

Grid plate – STEEL

Id. No.	C [mm]	A [mm]	Ø D [mm]	Ø D1 [mm]	M	E [mm]	F [mm]	G [mm]	I [mm]	S [mm]	Weight [kg]
57050025	160	400	12	11	M10	150	300	40	40	30	15
57050090	250	600	16	13	M12	250	500	75	50	35	39
57050130	350	600	16	13	M12	250	500	125	50	35	55
57050155	400	600	16	13	M12	250	500	150	50	35	63
57050175	450	800	16	13	M12	350	700	175	50	35	95
57050195	500	600	16	13	M12	250	500	200	50	35	78
57050210	550	800	16	13	M12	350	700	225	50	35	114
57050235	630	800	16	13	M12	350	700	250	50	35	131
57050250	800	800	16	13	M12	350	700	350	50	35	166

Special sizes on request.

Subplates

RT

- Steel grinded
- Without grid bore holes

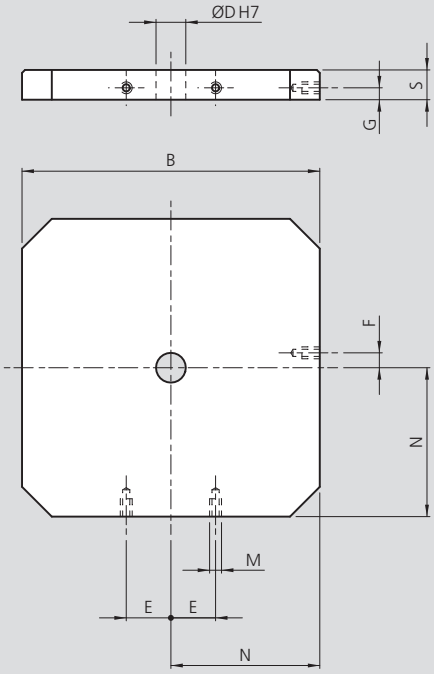

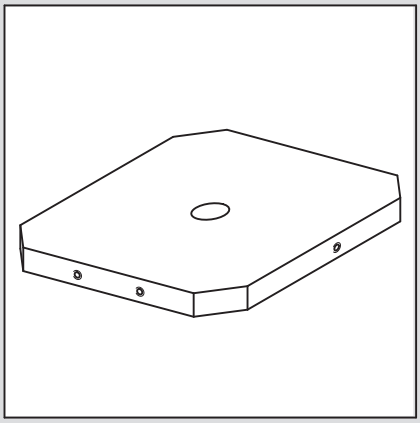

Subject to technical changes.

Subplates – STEEL

Id. No.	B [mm]	Ø D [mm]	M	N [mm]	E [mm]	F [mm]	G [mm]	S [mm]	Weight [kg]
57130010	320	30	-	160	-	-	-	40	30
57130020	400	50	M16	200	55	25	18	40	48
57130030	450	50	-	225	-	-	-	40	61
57130040	500	50	M16	250	75	25	18	40	76
57130050	550	50	-	275	-	-	-	40	93
57130060	630	50	M16	315	100	25	18	40	121

Special sizes on request.

RT

Subplates

- Steel grinded
- With grid bore holes

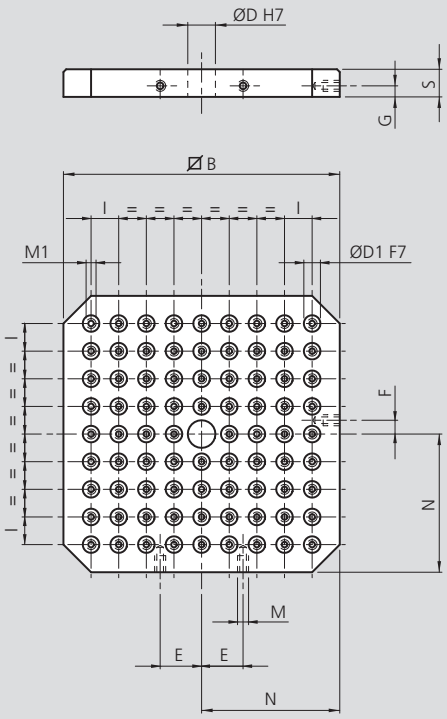

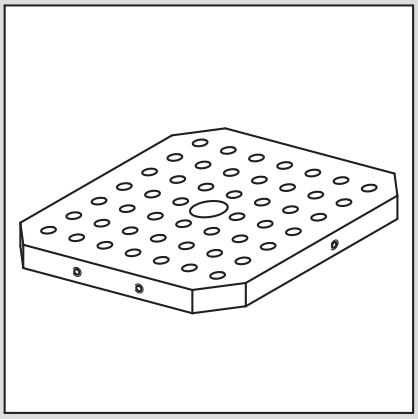

Subject to technical changes.

Grid plate – STEEL

Id. No.	B [mm]	Ø D [mm]	M	E [mm]	F [mm]	G [mm]	Ø D1 [mm]	M1	I [mm]	N [mm]	S [mm]	Weight [kg]
57140010	320	30	-	-	-	-	16	M12	50	160	40	29
57140020	400	50	M16	55	25	18	16	M12	50	200	40	47
57140030	450	50	-	-	-	-	16	M12	50	225	40	59
57140040	500	50	M16	75	25	18	16	M12	50	250	40	74
57140050	550	50	-	-	-	-	16	M12	50	275	40	90
57140060	630	50	M16	100	25	18	16	M12	50	315	40	117

Special sizes on request.

Precision machine vises from SMW-AUTOBLOK

Advantages:

- High constant clamping forces
- Maximum rigidity of the body
- Highest precision and accuracy
- Interfaces for zero point clamping system APS / WPS / ZeroAct
- Economic efficiency and flexibility

High precision vises from SMW-AUTOBLOK ensures highest process reliability while machining and best handling.
The large range of accessories guarantees the flexible use of the vices.
The use of SinterGrip inserts allow lowest clamping depths without pre-marking and is ideal for OP 10 operations.

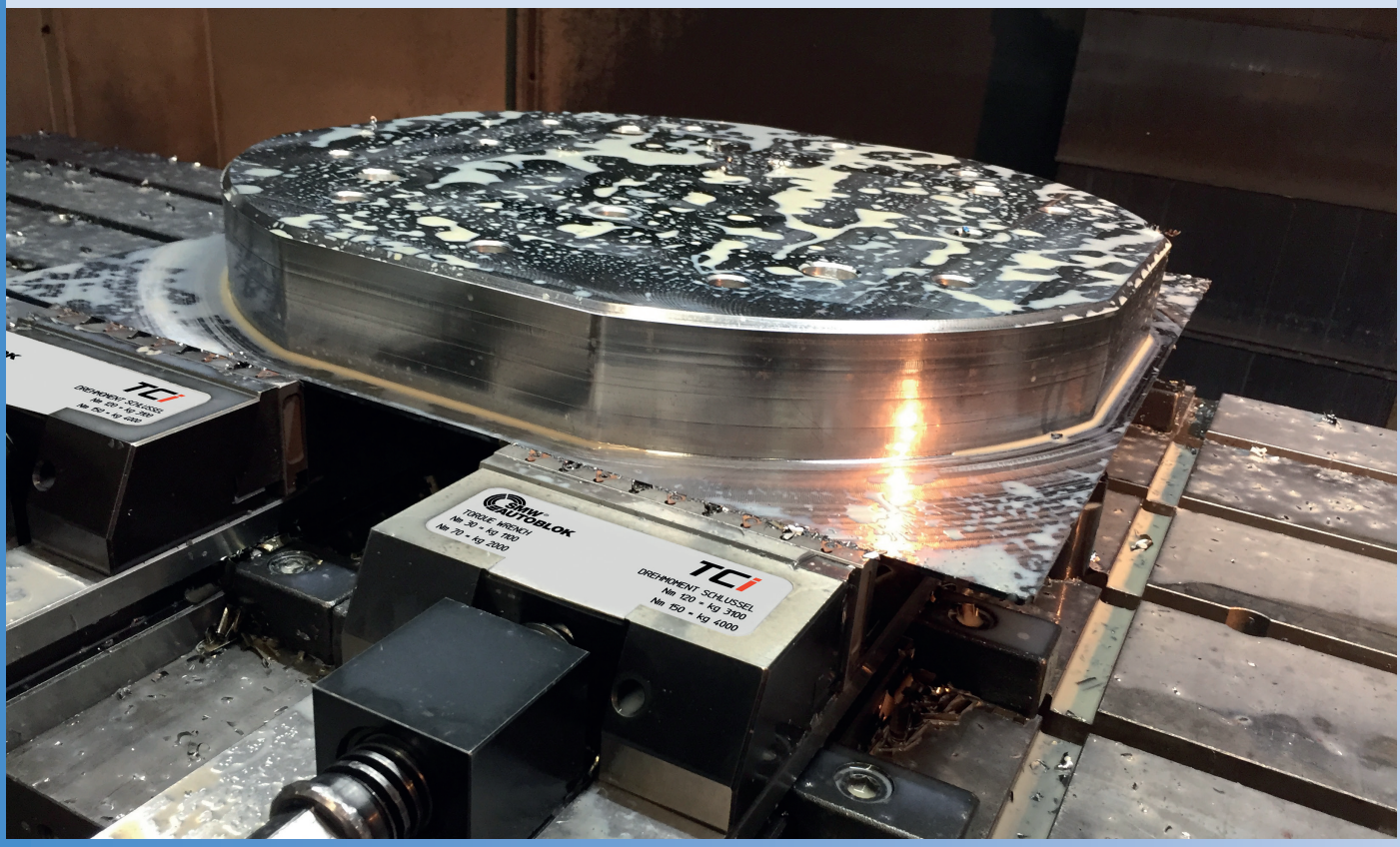

Precision machine vises

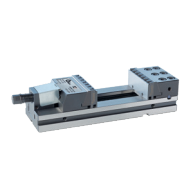

Page 258

TCi

Precision bench vise

- Quick pre-positioning for the movable jaw
- Pull down jaws with 1 serrated clamping side
- Jaws for SinterGrip clamping
- Parallels quick change system CLAK
- Wide range of standard accessories
- Interface Zero point clamping system (optional)
- Pendulum slide

Page 273

MCi

Precision bench vise

- Quick pre-positioning for the movable jaw
- Pull down jaws
- Jaws for SinterGrip clamping
- Parallels quick change system CLAK
- No side mounting possible
- Interface Zero point clamping system (optional)

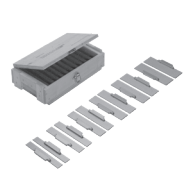

Page 285

CLAK System

Parallels

- Parallels for quick change systems
- Suitable for TCi and MCi vices

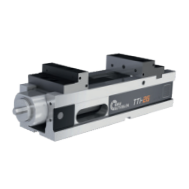

Page 290

TTi-2G

NC clamping vise

- Mechanical precise power transmitter
- Low maintenance sealed spindle
- Easy and quick cleaning
- Exact clamping force pre-adjustment (up to 11 steps)
- Standard jaw interface (Allmatic-interchangeable)
- Interface zero point clamping system

TCi
Precision bench vise

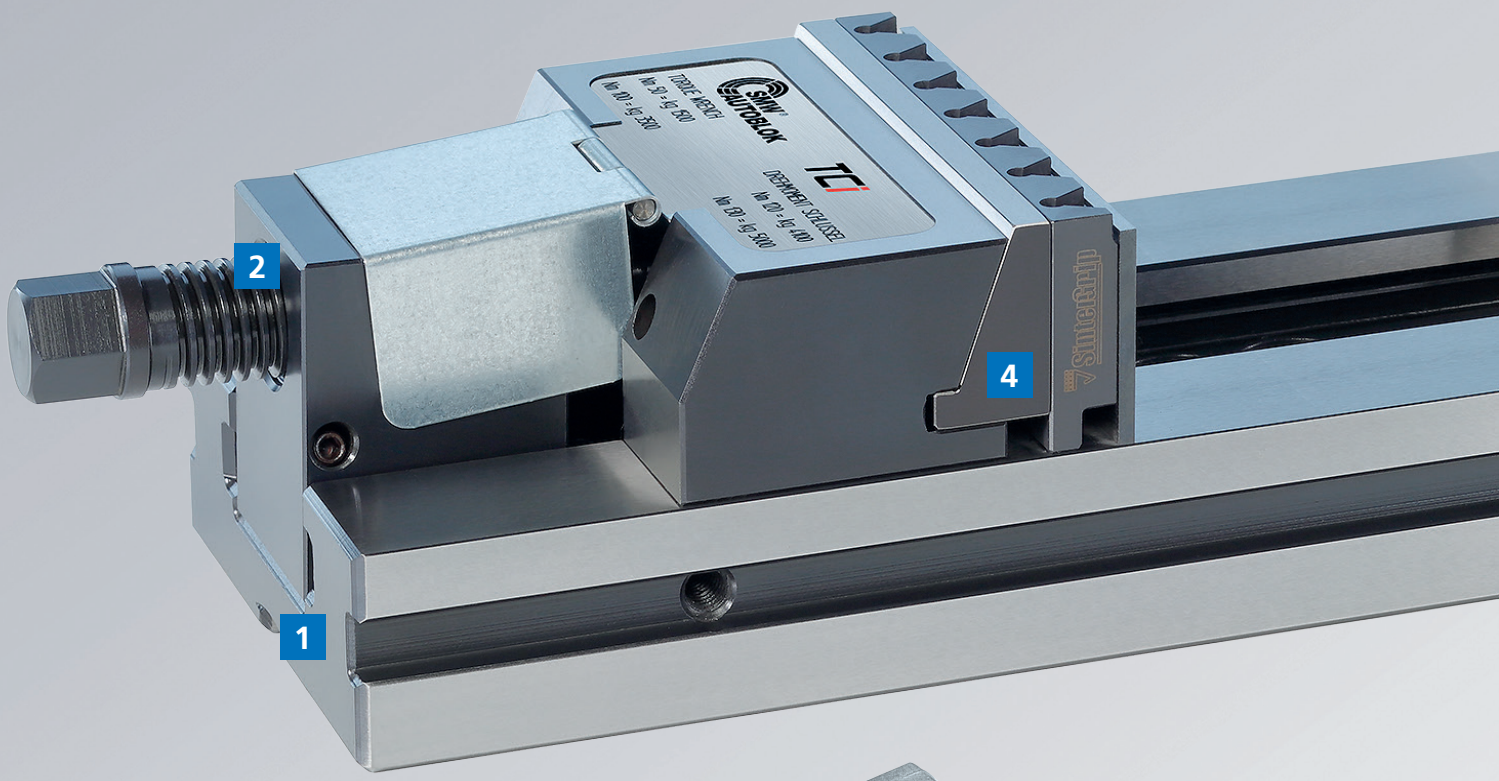

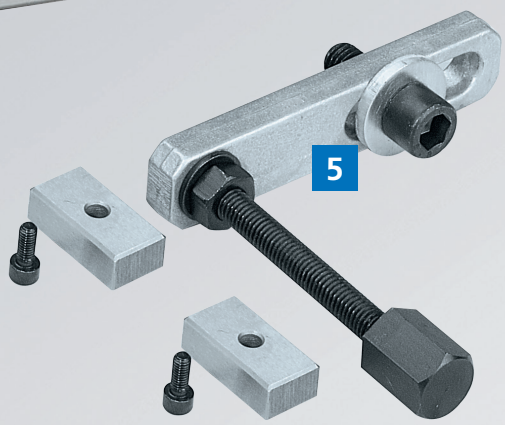

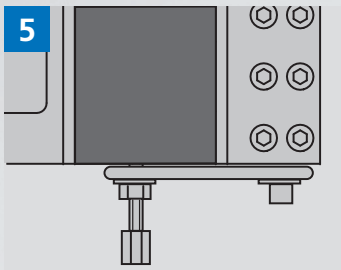

Workpiece stop

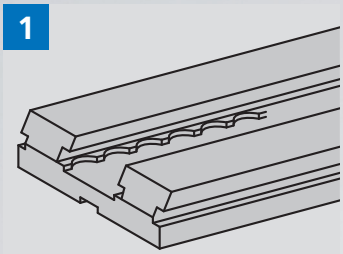

Quick positioning
of the movable jaw

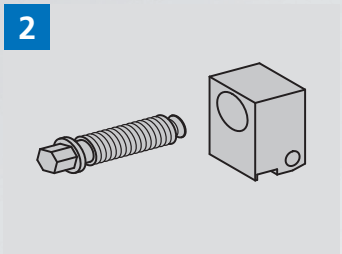

Block for clamping screw

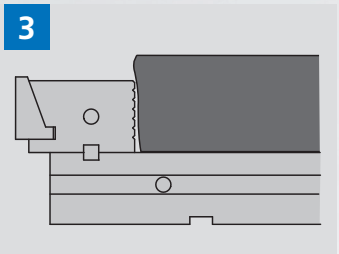

Fixed support turned of 180°
(grooved part)

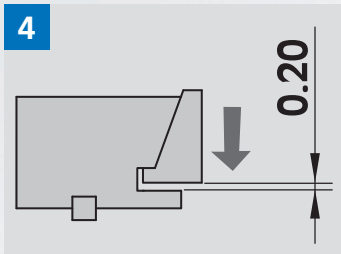

Pull-down jaws
(Pull-down lockable)

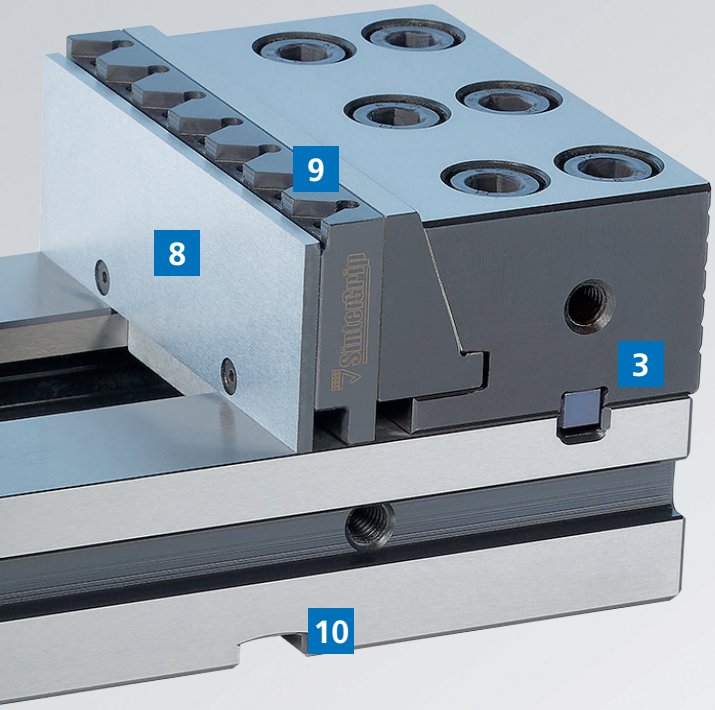

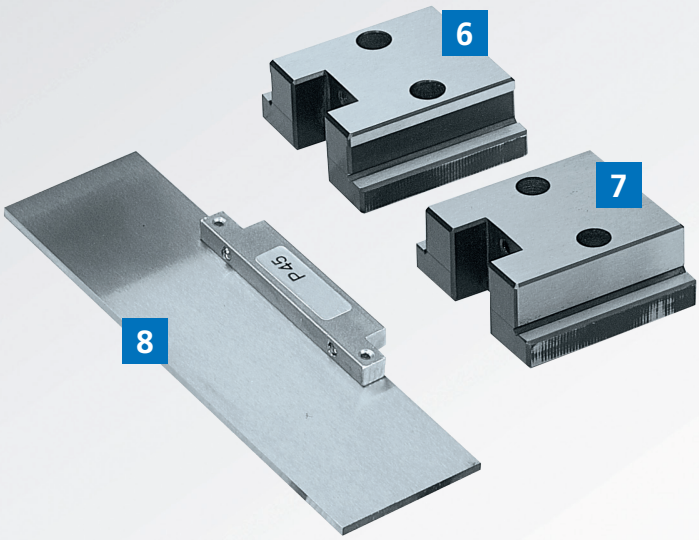

6

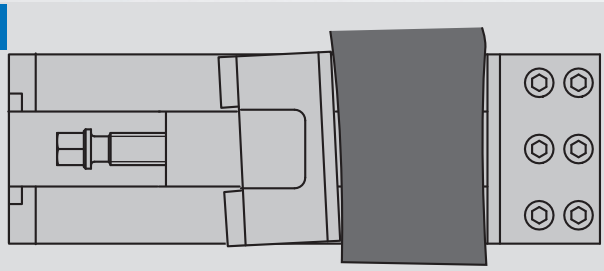

Floating slide-way raw workpieces

7

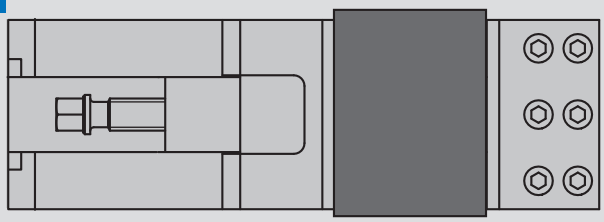

Rigid slide-way for finished workpieces

8

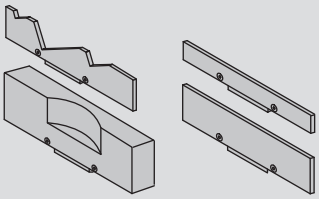

CLAK Quick change system for parallels

9

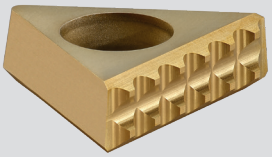

Jaws for SinterGrip clamping inserts

10

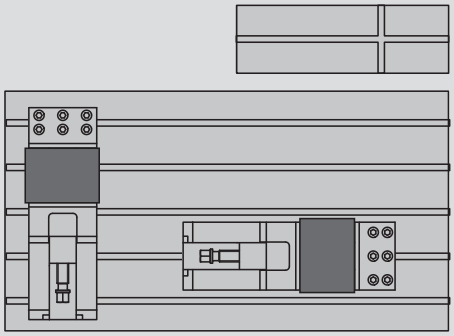

Precise T-slots for the assembling on the machine table by using positioning keys

TCi

Precision bench vise

■ Quick positioning for the jaw
■ Pull-down jaws with SinterGrip

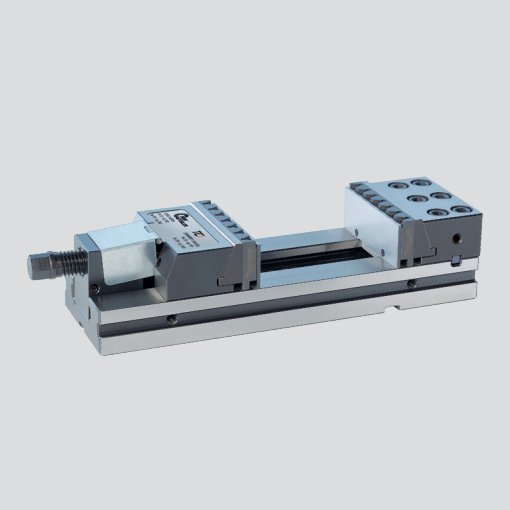

Application/customer benefits

- High precision bench vise
- Quick positioning for the movable jaw
- Pull-down jaws including the possibility to use them without pull down effect for OP 10 operations
- Easy and quick cleaning possible
- Maximum flexibility due to the wide range of accessories
- Tolerances according to JIS standards

SinterGrip
Page 302

Technical features

- 3 different jaw sizes
- Pull-down jaws (0.2 mm), Fixed jaw 180° turned with serrated clamping side for OP 10
- Parallel stripes with quick change „CLAK-System“ see page 285
- Optional: Interface for zero point clamping systems APS / WPS / ZeroAct (on request)

Standard equipment

TCi precision bench vise with clamping wrench, pull-down jaws, jaws for SinterGrip clamping inserts, workstop, protection cover for spindle, parallels with quick change „CLAK-System“, floating slide-ways, 1 pair positioning keys, transport box

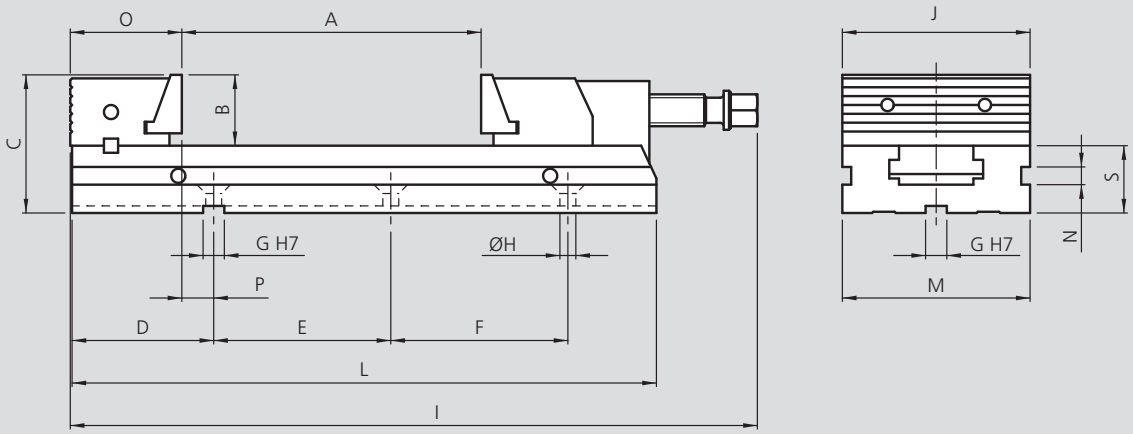

Subject to technical changes.

Order review

Type	Id. No.	A [mm]	B [mm]	C [mm]	D [mm]	E [mm]	F [mm]	G [mm]	H [mm]	I [mm]	J [mm]	L [mm]	M [mm]	N [mm]	O [mm]	P [mm]	S [mm]	Weight [kg]
TCi 110 x 100	77580101	100	40	78	80	150	-	12	9	338	110	280	110	10	63	18	38	11.5
TCi 110 x 150	77580102	150	40	78	80	100	100	12	9	388	110	330	110	10	63	18	38	12.5
TCi 150 x 200	77580201	200	50	98	114	200	-	18	12.5	481	150	413	150	13	85	30	48	27
TCi 150 x 250	77580202	250	50	98	114	100	150	18	12.5	531	150	463	150	13	85	30	48	29
TCi 150 x 300	77580203	300	50	98	114	100	100	18	12.5	588	150	520	150	13	85	30	48	31.5
TCi 200 x 300	77580302	300	70	138	149	200	200	18	12.5	697	200	610	200	15.5	123	27	68	78
TCi 200 x 400	77580303	400	70	138	149	150	150	18	12.5	797	200	710	200	15.5	123	27	68	86

Special sizes on request.

Precision bench vise

TCi-XL

- Quick positioning for the jaw
- Extra long clamping range

Application/customer benefits

- High precision bench vise in extra long version
- Quick positioning for the movable jaw
- Pull-down jaws including the possibility to use them without pull down effect for OP 10 operations
- Easy and quick cleaning possible
- Maximum flexibility due to the wide range of accessories

Technical features

- 2 different jaw sizes
- Pull-down jaws (0.2 mm), Fixed jaw 180° turned with serrated clamping side for OP 10
- Parallel stripes with quick change „CLAK-System“ see page 285
- Optional: interface for zero point clamping systems APS / WPS / ZeroAct (on request)

Standard equipment

TCi-XL precision bench vise with clamping wrench, pull-down jaws, workstop, protection cover for spindle, parallels with quick change „CLAK-System“, floating slide-ways, 1 pair positioning keys, transport box

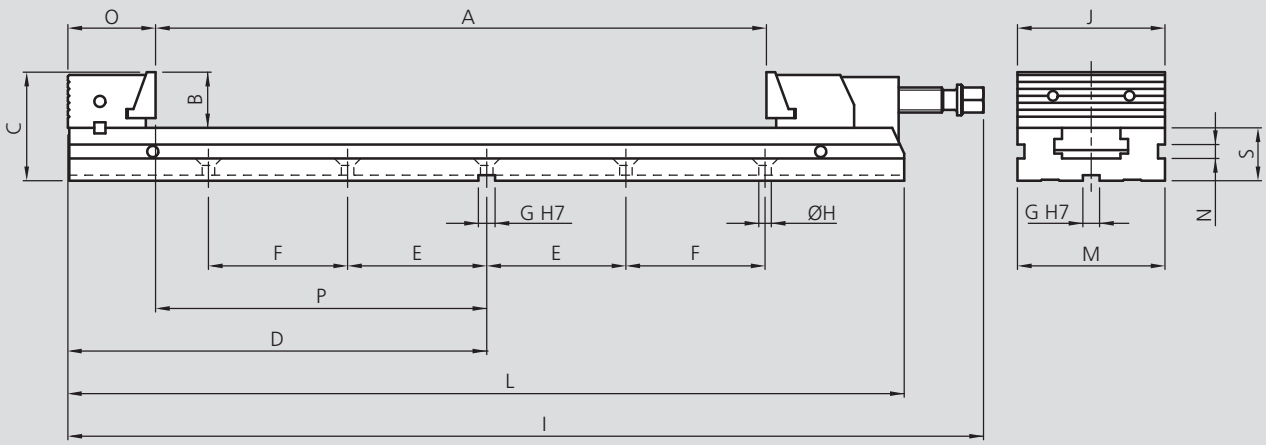

Subject to technical changes.

Order review

Type	Id. No.	A [mm]	B [mm]	C [mm]	D [mm]	E [mm]	F [mm]	G [mm]	H [mm]	I [mm]	J [mm]	L [mm]	M [mm]	N [mm]	O [mm]	P [mm]	S [mm]	Weight [kg]
TCi-XL 110 x 425	77580104	425	40	78	300	100	100	12	9	658	110	600	110	10	63	238	38	18.2
TCi-XL 150 x 545	77580204	545	50	98	379	100	150	18	12.5	825	150	758	150	13	85	298	48	40.0
TCi-XL 150 x 665	77580205	665	50	98	439	100	200	18	12.5	946	150	878	150	13	85	355	48	44.7

TCi-DC

Precision bench vise

■ Quick positioning for the jaw
■ Double clamping system

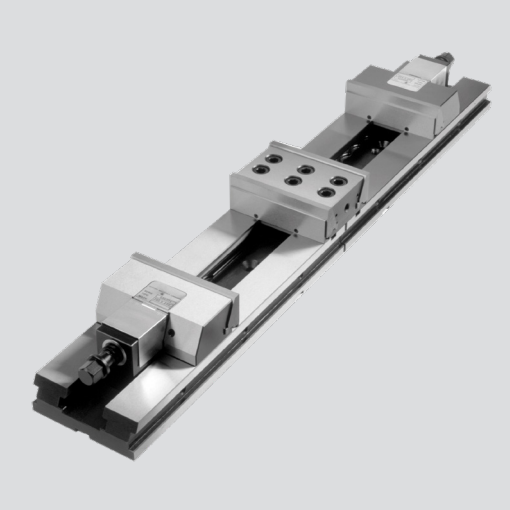

Application/customer benefits

- High precision bench vise with double clamping system
- Quick positioning for the movable jaw
- Pull-down jaws including the possibility to use them without pull down effect for OP 10 operations
- Easy and quick cleaning possible
- Maximum flexibility due to the wide range of accessories

Technical features

- 3 different jaw sizes
- Pull-down jaws (0.2 mm), Fixed jaw 180° turned with serrated clamping side for OP 10
- Parallel stripes with quick change „CLAK-System“ see page 285
- Optional: interface for zero point clamping systems APS / WPS / ZeroAct (on request)

Standard equipment

TCi-DC precision bench vise with clamping wrench, pull-down jaws, workstop, protection cover for spindle, parallels with quick change „CLAK-System“, floating slide-ways, 1 pair positioning keys, transport box

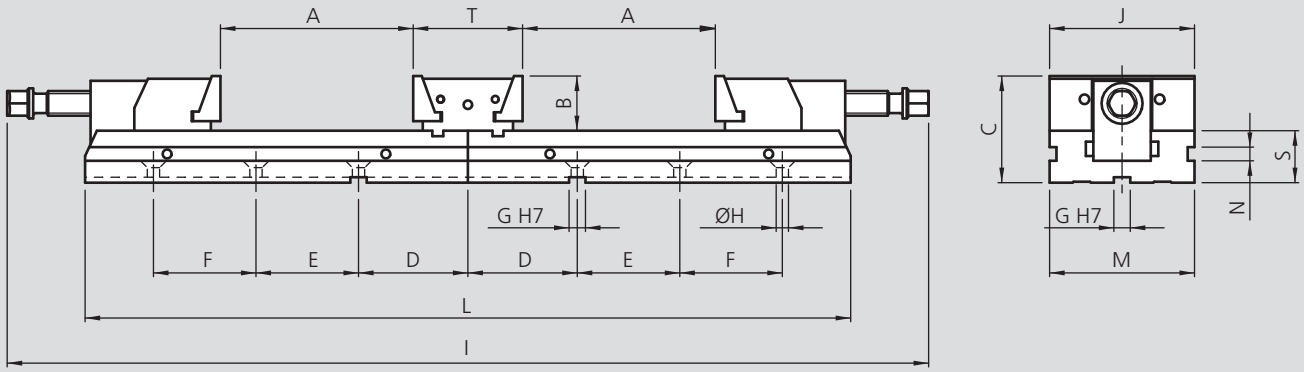

Subject to technical changes.

Order review

Type	Id. No.	A [mm]	B [mm]	C [mm]	D [mm]	E [mm]	F [mm]	G [mm]	H [mm]	I [mm]	J [mm]	L [mm]	M [mm]	N [mm]	S [mm]	T [mm]	Weight [kg]
TCi-DC 110 x 130	77581101	130	40	78	80	150	-	12	9	676	110	56	110	10	38	80	22
TCi-DC 110 x 180	77581102	180	40	78	80	100	100	12	9	776	110	660	110	38	80	24	24
TCi-DC 150 x 230	77581201	230	50	98	116	200	-	18	12.5	966	150	830	150	13	48	108	52
TCi-DC 150 x 280	77581202	280	50	98	116	100	150	18	12.5	1066	150	930	150	13	48	108	56
TCi-DC 200 x 330	77581302	330	70	138	150	200	200	18	12.5	1394	200	1222	200	15.5	68	194	144

Clamping force diagram

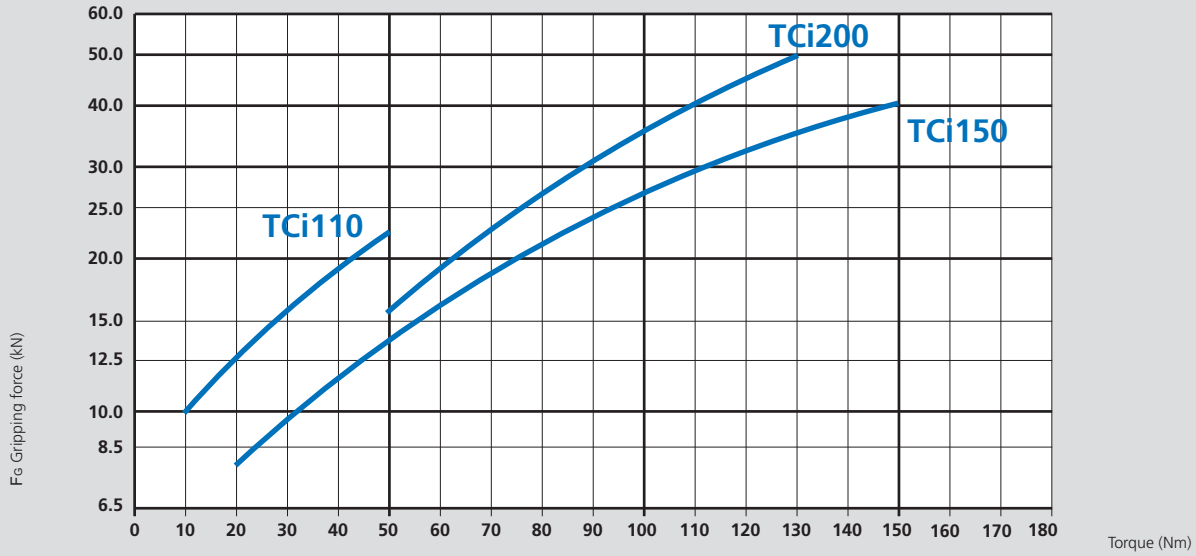

Form, position and dimensional tolerances for all clamping vises TCi

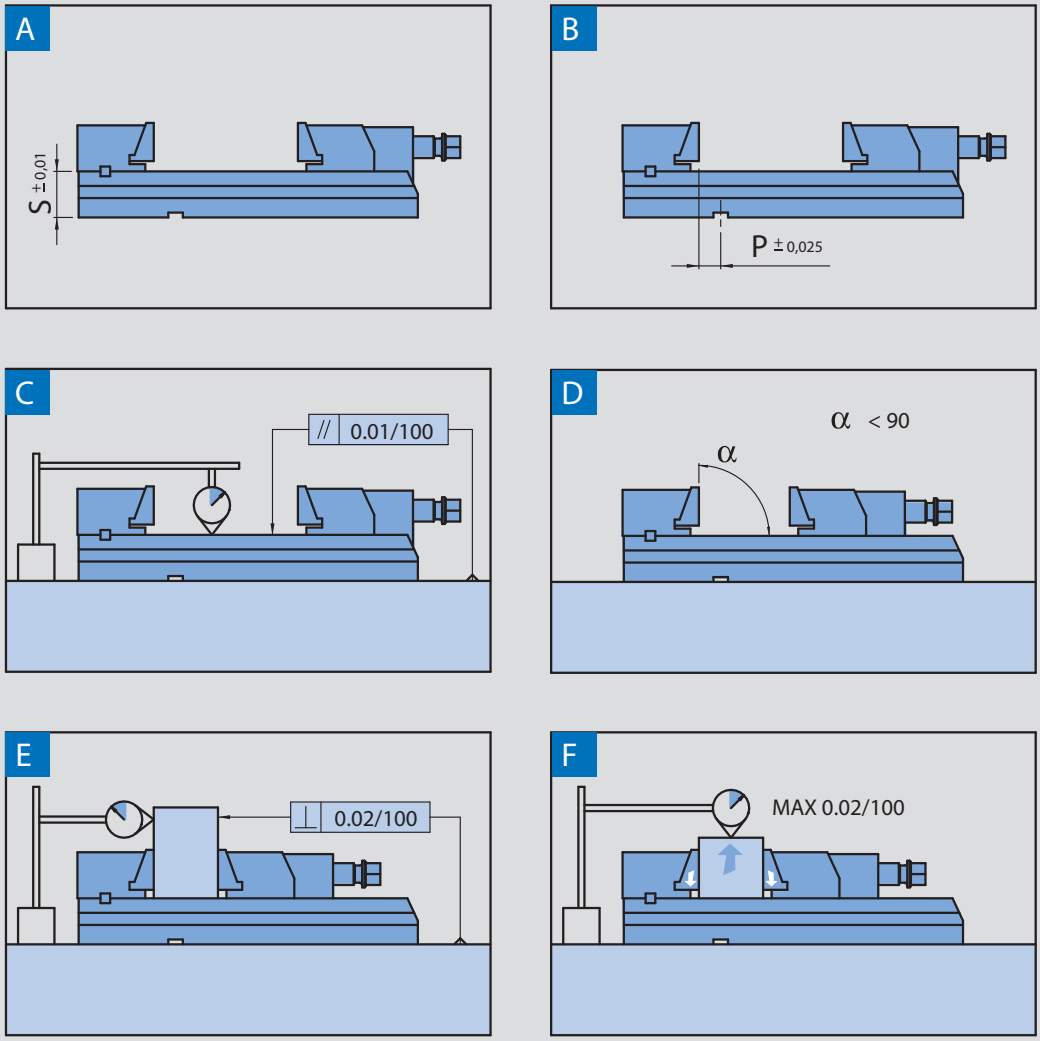

TCi extension element with pair of positioning keys

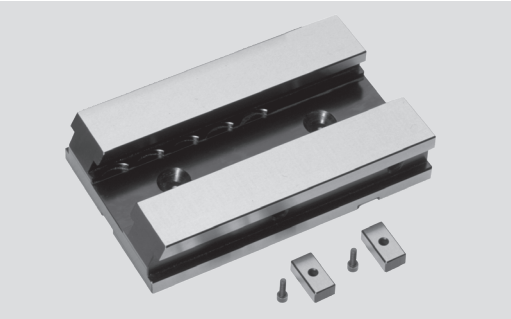

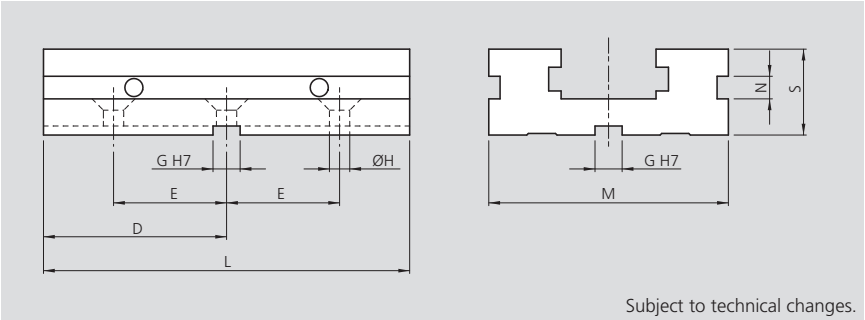

Subject to technical changes.

Type	Id. No.	D [mm]	E [mm]	G [mm]	H [mm]	L [mm]	M [mm]	N [mm]	S [mm]	Weight [kg]
TCi-110	58011700	81	50	12	9	162	110	10	38	3.5
TCi-150	58021700	114	75	18	12.5	228	150	13	48	9
TCi-200	58031700	150	100	18	12.5	300	200	15.5	68	22

Application examples

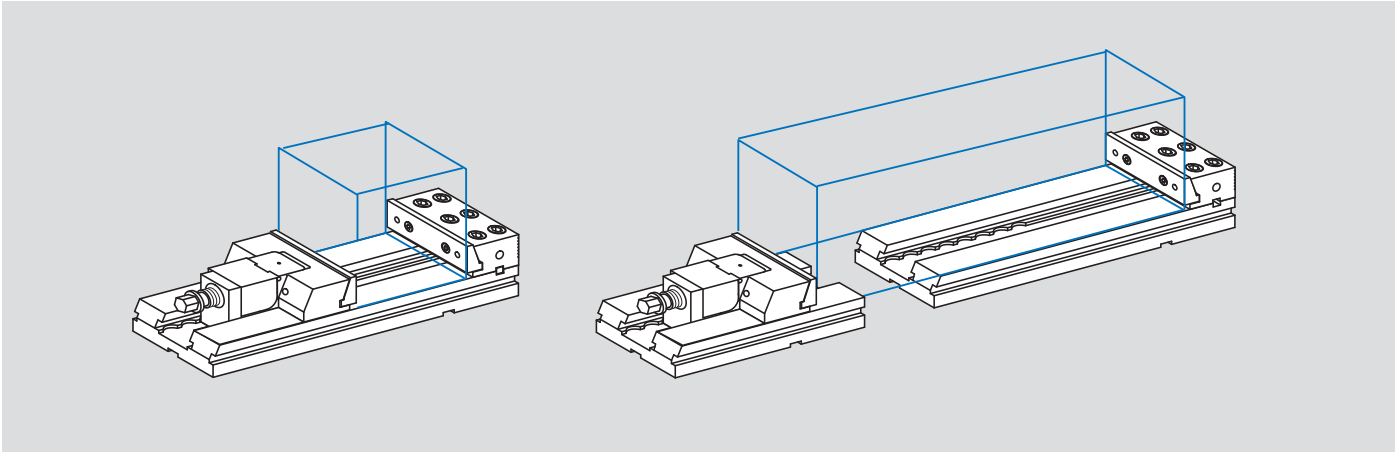

Precision bench vise

TCi

- Clamping unit, fix jaw and double jaw single unit
- Flexible application

TCi Clamping unit for flexible application

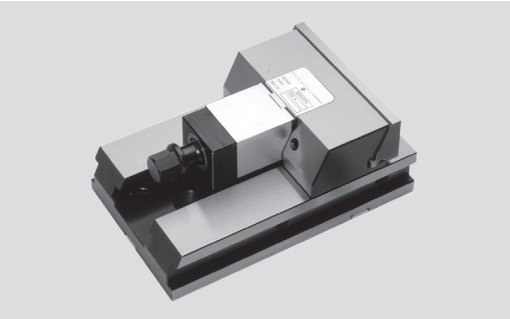

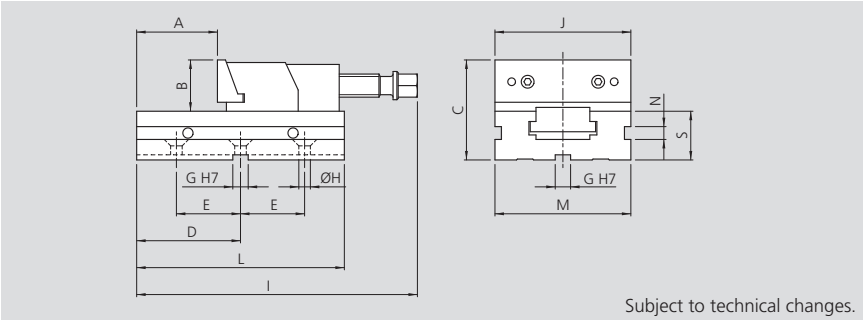

Subject to technical changes.

Type	Id. No.	A [mm]	B [mm]	C [mm]	D [mm]	E [mm]	G [mm]	H [mm]	I [mm]	J [mm]	L [mm]	M [mm]	N [mm]	S [mm]	Weight [kg]
TCi-110	58017110	60	40	78	81	50	12	9	220	110	162	110	10	38	6.2
TCi-150	58027110	100	50	98	114	75	18	12.5	295	150	228	150	13	48	15.1
TCi-200	58037110	120	70	138	150	100	18	12.5	390	200	300	200	15.5	68	39.2

TCi fix jaw unit for flexible application

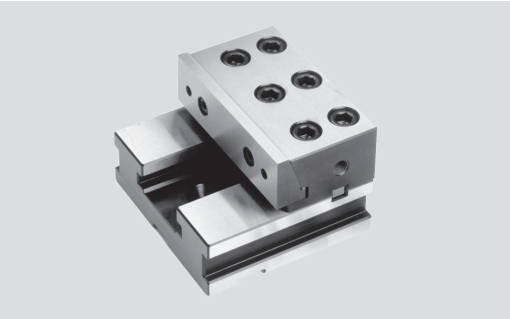

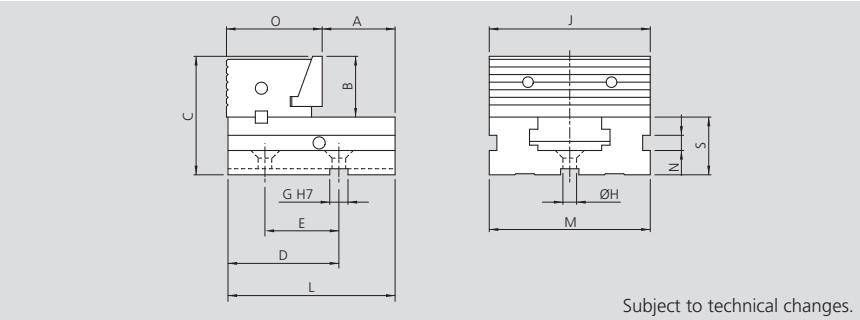

Subject to technical changes.

Type	Id. No.	A [mm]	B [mm]	C [mm]	D [mm]	E [mm]	G [mm]	H [mm]	J [mm]	L [mm]	M [mm]	N [mm]	O [mm]	S [mm]	Weight [kg]
TCi-110	58017010	58	40	78	80	50	12	9	110	120	110	10	63	38	4
TCi-150	58027010	81	50	98	114	75	18	12.5	150	165	150	13	85	48	9
TCi-200	58037010	82	70	138	149	100	18	12.5	200	205	200	15.5	123	68	28

TCi double jaw unit for flexible application

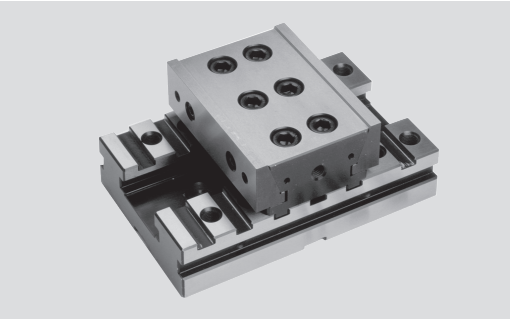

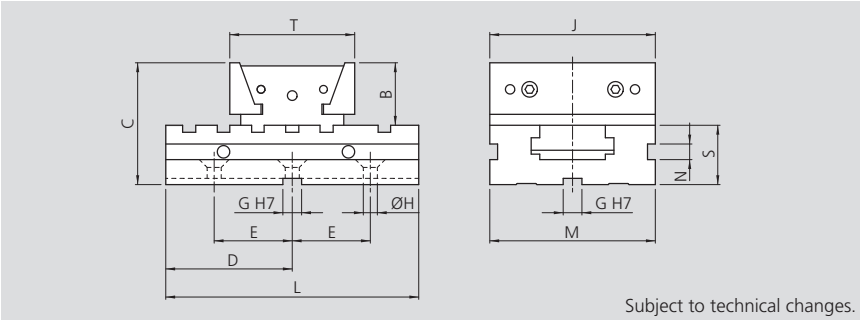

Subject to technical changes.

Type	Id. No.	B [mm]	C [mm]	D [mm]	E [mm]	G [mm]	H [mm]	J [mm]	L [mm]	M [mm]	N [mm]	S [mm]	T [mm]	Weight [kg]
TCi-110	58117010	40	78	81	50	12	9	110	162	110	10	38	80	5.6
TCi-150	58127010	50	98	114	75	18	12.5	150	228	150	13	48	108	13.5
TCi-200	58137010	70	138	150	100	18	12.5	200	300	200	15.5	68	194	34.7

TCi clamping units for flexible applications

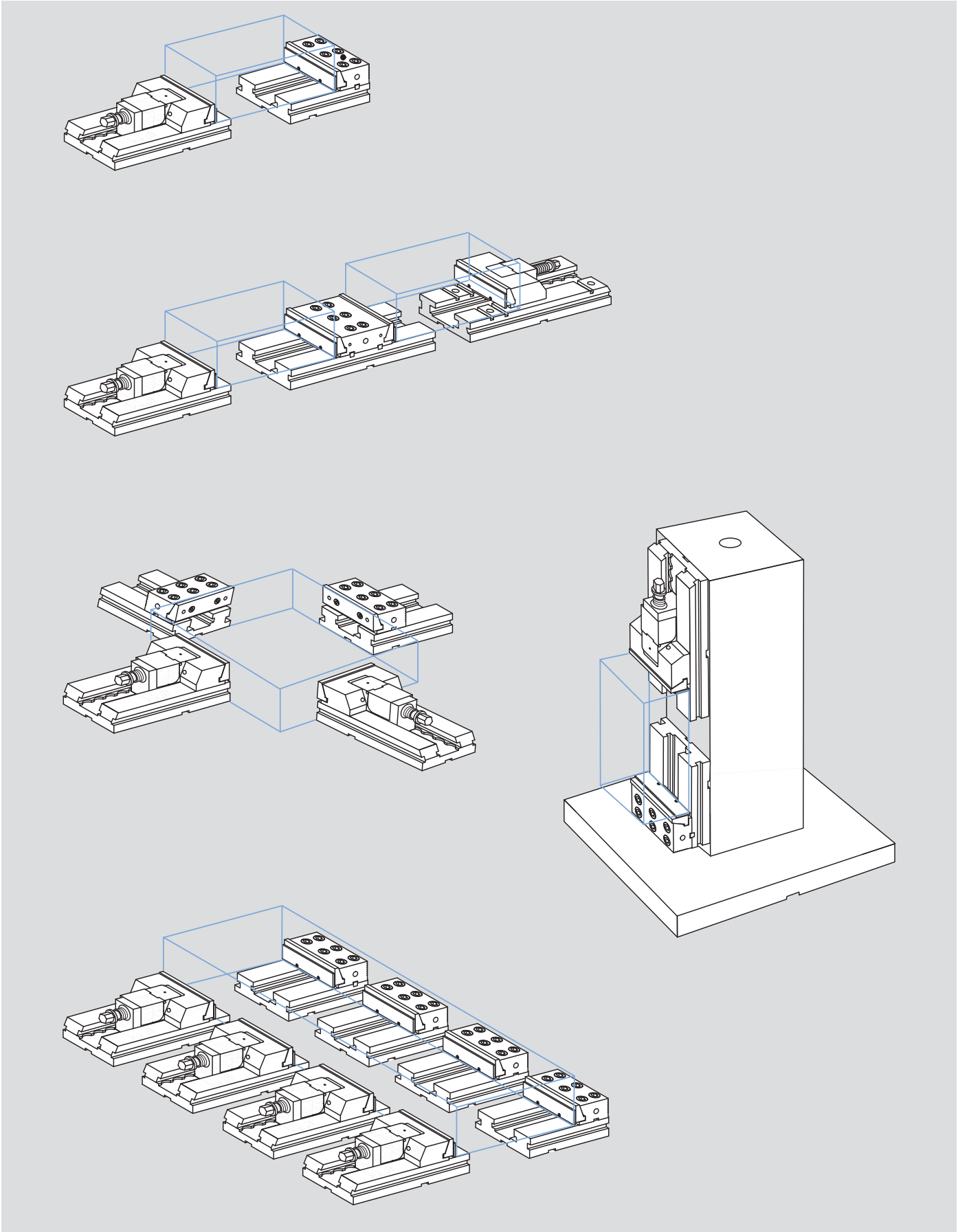

TCi jaws for SinterGrip clamping inserts

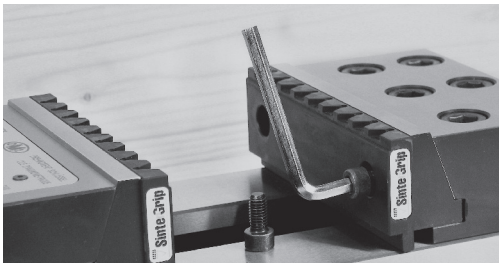

Type	Id. No.
TCi 110	58451159
TCi 150	58451219
TCi 200	58451419

Consisting of:
2 pieces jaws
without SinterGrip Inserts

SinterGrip
Page 302

TCi pull-down jaws smooth

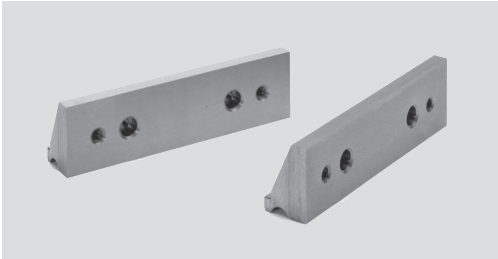

Type	Id. No.
TCi 110	58010409
TCi 150	58020409
TCi 200	58030409

Consisting of:
2 pieces jaws

TCi pull-down jaws serrated

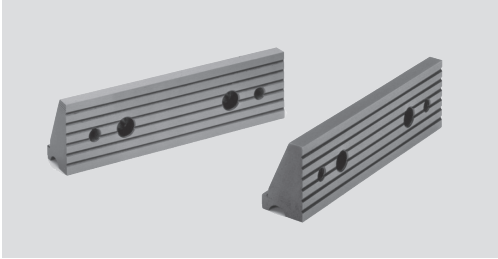

Type	Id. No.
TCi 110	58014409
TCi 150	58024409
TCi 200	58034409

Consisting of:
2 pieces jaws

TCi torque wrench

Type	Id. No.
TCi 110	51501001
TCi 150	51501002
TCi 200	51501003

TCi fixed jaw carrier for double clamping (extension)

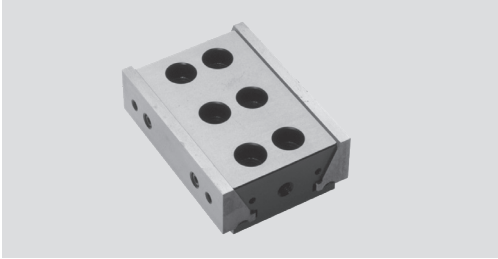

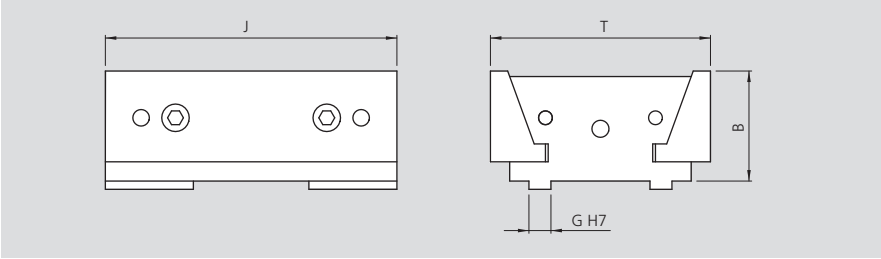

Type	Id. No	B [mm]	G [mm]	J [mm]	T [mm]	Weight [kg]
TCi 110	58117210	40	8	110	80	2.2
TCi 150	58127210	50	12	150	108	5
TCi 200	58137210	70	14	200	194	11.6

Clamps (1 pair) incl. screw and T-nut

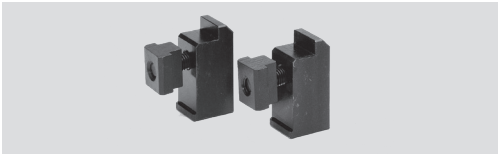

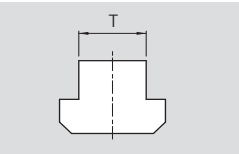

Type	Id. No. / groove width					
	12 mm	14 mm	16 mm	18 mm	20 mm	22 mm
TCi 110	58012792	58012793	58012794	58012795	58012796	58012797
TCi 150	58022792	58022793	58022794	58022795	58022796	58022797
TCi 200	58032792	58032793	58032794	58032795	58032796	58032797

T-nuts (1 pair) incl. screw

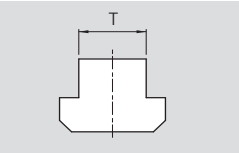

Type	Id. No. / groove width					
	12 mm	14 mm	16 mm	18 mm	20 mm	22 mm
TCi 110	58012592	58012593	58012594	58012595	58012596	58012597
TCi 150	58022592	58022593	58022594	58022595	58022596	58022597
TCi 200	58032592	58032593	58032594	58032595	58032596	58032597

Key way with standard dimensions (1 pair)

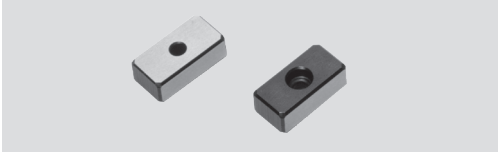

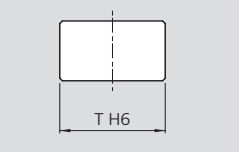

Type	Id. No. / groove width 12h6 mm
TCi 110	58011392
TCi 150	58021395
TCi 200	58021395

Key way with special dimensions (1 pair)

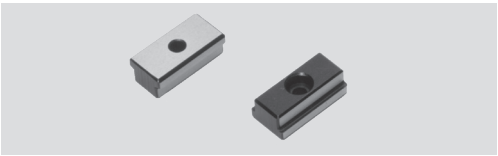

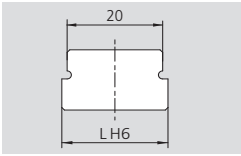

Type	Id. No. / groove width					
	12h6 mm	14h6 mm	16h6 mm	18h6 mm	20h6 mm	22h6 mm
TCi 110	58011392	58011393	58011394	58011395	58011396	58011397
TCi 150	58021392	58021393	58021394	58021395	58021396	58021397
TCi 200	58021392	58021393	58021394	58021395	58021396	58021397

Modular vertical clamping system

MVS-TCi

- Quick positioning for the jaw
- Maximum flexibility

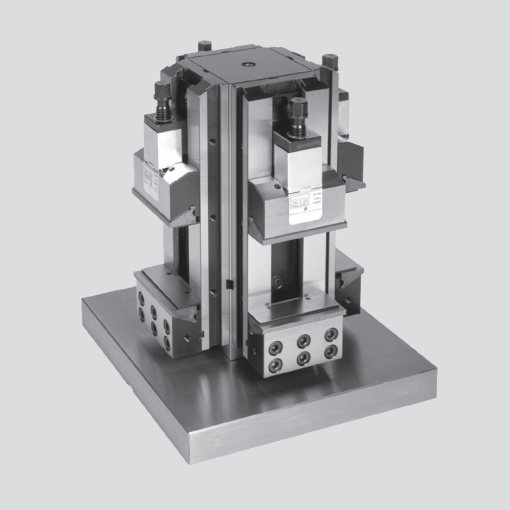

Application/customer benefits

- Steel tombstone ready to use on horizontal machining centres, including 4 TCi vices
- Quick positioning for the movable jaw
- Maximum flexibility due to the wide range of accessories

Technical features

- 3 different jaw sizes
- Pull-down jaws (0.2 mm), Fixed jaw 180° turned with serrated clamping side for OP 10
- Parallel stripes with quick change „CLAK-System“ see page 285
- Interface for JIS pallets and for zero point clamping systems APS / WPS / ZeroAct (on request)

Standard equipment

Vertical clamping system complete with: 4 clamping equipment TCi, 1 column, 1 base for vertical system TCi, 4 pairs of SinterGrip jaws, 4 pairs of CLAK parallels, 4 covers for protection of the screws 4 rigid slide-ways, 4 floating slide-ways (for raw workpieces), 4 workstops, 4 wrenches, eye bolt for lifting, transport box

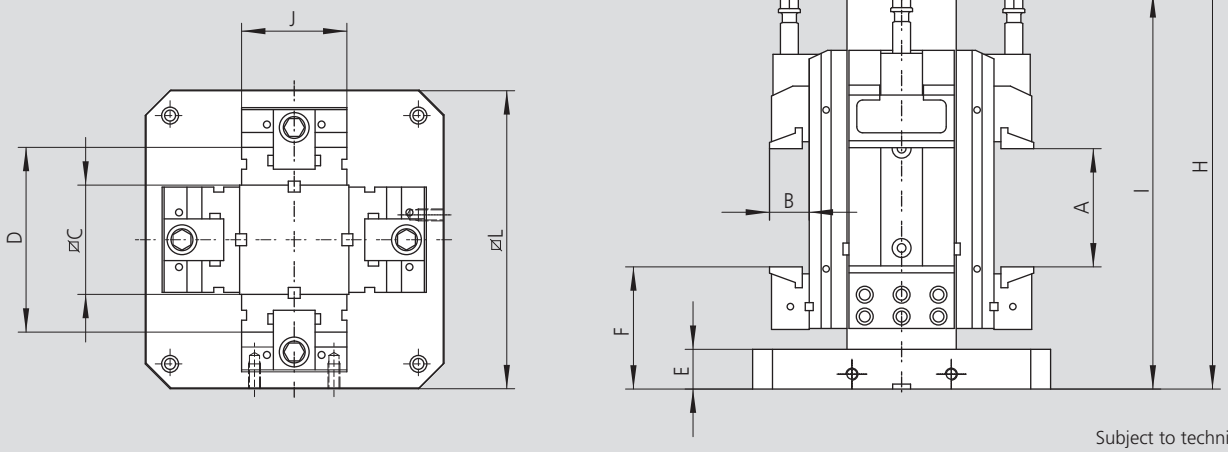

Subject to technical changes.

Order review

Type	Id. No.	A [mm]	B [mm]	C [mm]	D [mm]	E [mm]	F [mm]	H [mm]	I [mm]	J [mm]	L [mm]	Weight [kg]
MVS-TCi 110x100	77582111	100	40	110	186	40	123	391	400	110	300	108
MVS-TCi 110x150	77582112	150	40	110	186	40	123	391	450	110	300	112
MVS-TCi 150x200	77582221	200	50	150	246	40	151	580	550	150	400	255
MVS-TCi 150x250	77582222	250	50	150	246	40	151	580	600	150	400	263
MVS-TCi 150x300	77582223	300	50	150	246	40	151	580	655	150	400	273
MVS-TCi 150x200	77582231	200	50	150	246	40	151	580	550	150	500	282
MVS-TCi 150x250	77582232	250	50	150	246	40	151	580	600	150	500	290
MVS-TCi 150x300	77582233	300	50	150	246	40	151	580	655	150	500	300
MVS-TCi 200x300	77582332	300	70	200	336	40	173	661	750	200	500	580

MVS-TCi

Modular vertical clamping system

■ Steel tombstone

Application/customer benefits
- Steel tombstone ready to use on horizontal machining centres

Technical features
- Interface for JIS pallets and for zero point clamping systems APS / WPS / ZeroAct

Standard equipment
Tombstone

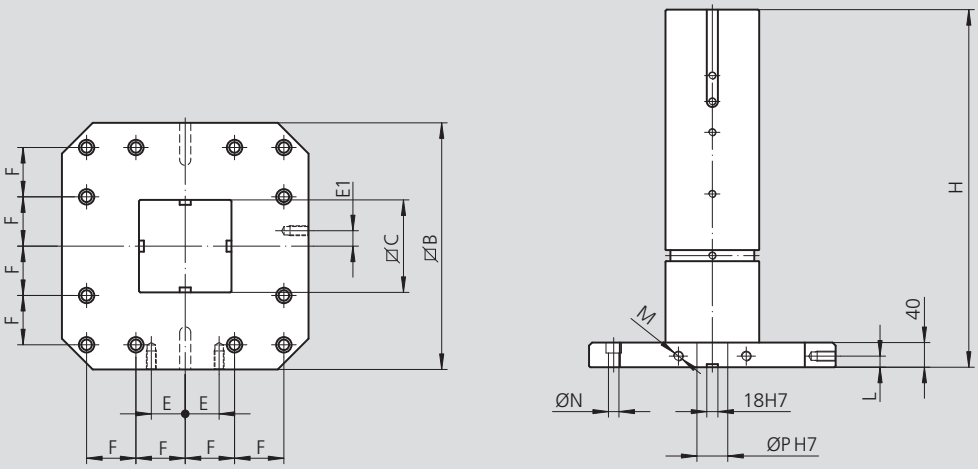

Subject to technical changes.

Order review

Type	Id. No.	B [mm]	C [mm]	E [mm]	E1 [mm]	F [mm]	H [mm]	L [mm]	M [mm]	N [mm]	P [mm]	Weight [kg]
MVS-TCi 110	58218010	300	110	40	0	125	391	15	12	13	25	57
MVS-TCi 150	58228020	400	150	55	25	80	580	18	16	17	50	142
MVS-TCi 150	58228030	500	150	75	25	100	580	18	16	17	50	169
MVS-TCi 200	58238030	500	200	75	25	100	661	18	16	17	50	266

Insert for vertical use

Type	Id. No.
MVS-TCi 110	58213300
MVS-TCi 150	58223300
MVS-TCi 200	58233300

Modular vertical clamping system

VCS-TC

- Quick positioning for the jaw
- Maximum flexibility

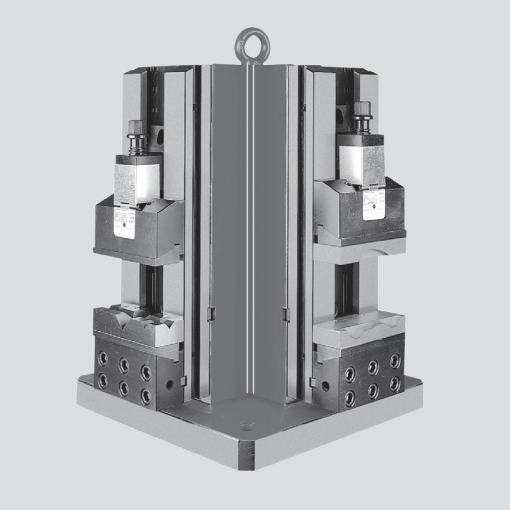

Application/customer benefits

- Steel cross tombstone ready to use on horizontal machining centres, including 4 TCi vises
- Quick positioning for the movable jaw
- Maximum flexibility due to the wide range of accessories

Technical features

- 2 different jaw sizes
- Pull-down jaws (0.2 mm), Fixed jaw 180° turned with serrated clamping side for OP 10
- Parallel stripes with quick change „CLAK-System“ see page 285
- Interface for JIS pallets and for zero point clamping systems APS / WPS / ZeroAct (on request)

Standard equipment

Vertical clamping system complete with: 4 clamping equipment TCi, 1 cross tombstone, 4 pairs of SinterGrip jaws, 4 pairs of CLAK parallels, 4 covers for protection of the screws 4 rigid slide-ways, 4 floating slide-ways (for raw workpieces), 4 workstops, 4 wrenches, eye bolt for lifting, transport box

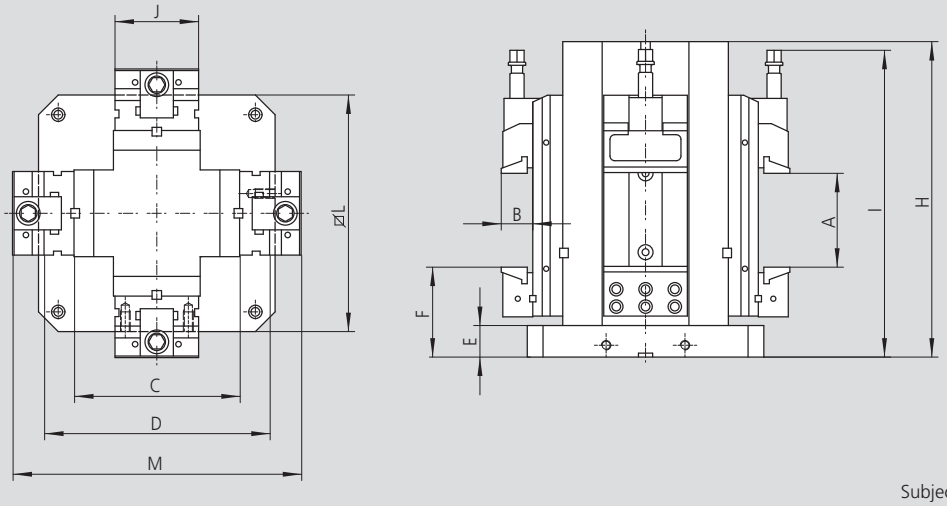

Subject to technical changes.

Order review

Type	Id. No.	A [mm]	B [mm]	C [mm]	D [mm]	E [mm]	F [mm]	H [mm]	I [mm]	J [mm]	L [mm]	M [mm]	Weight [kg]
VCS-TCi 110x100	77585111	100	40	210	286	40	114	382	390	110	300	366	121
VCS-TCi 110x150	77585112	150	40	210	286	40	114	382	440	110	300	366	125
VCS-TCi 150x200	77585221	200	50	300	396	40	145	580	545	150	400	496	320
VCS-TCi 150x250	77585222	250	50	300	396	40	145	580	595	150	400	496	328
VCS-TCi 150x300	77585223	300	50	300	396	40	145	580	652	150	400	496	338
VCS-TCi 150x200	77585231	200	50	300	396	40	145	580	545	150	500	496	348
VCS-TCi 150x250	77585232	250	50	300	396	40	145	580	595	150	500	496	356
VCS-TCi 150x300	77585233	300	50	300	396	40	145	580	652	150	500	496	366
VCS-TCi 200x300	77585342	300	70	350	486	45	182	670	760	200	630	626	675

Application examples

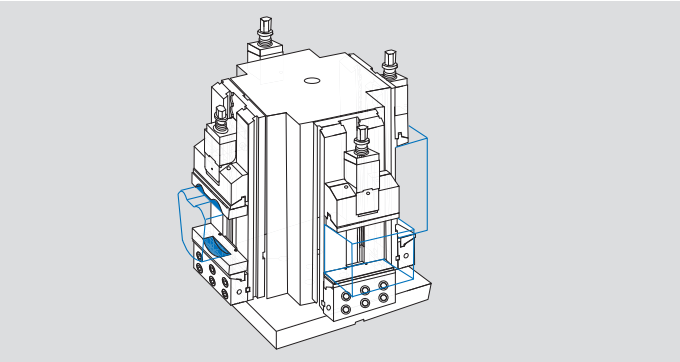

DVCS-TCi

Modular vertical double clamping system

- Quick positioning for the jaw
- Maximum flexibility

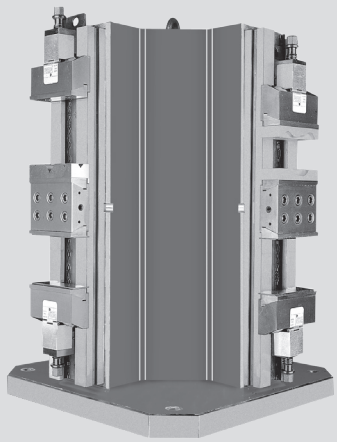

Application/customer benefits

- Steel cross tombstone ready to use on horizontal machining centres, including 4 TCi vises
- Extra long clamping range
- Quick positioning for the movable jaw
- Maximum flexibility due to the wide range of accessories

Technical features

- 3 different jaw sizes
- Pull-down jaws (0.2 mm), Fixed jaw 180° turned with serrated clamping side for OP 10
- Parallel stripes with quick change „CLAK-System“ see page 285
- Interface for JIS pallets and for zero point clamping systems APS / WPS / ZeroAct (on request)

Standard equipment

Vertical clamping system complete with: 4 clamping equipment TCi-DC, 1 cross tombstone, 8 pairs of CLAK parallels, 8 covers for protection of the screws, 8 rigid slide-ways, 8 floating slide-ways (for raw workpieces), 8 workstops, 8 wrenches, eye bolt for lifting, transport box

Subject to technical changes.

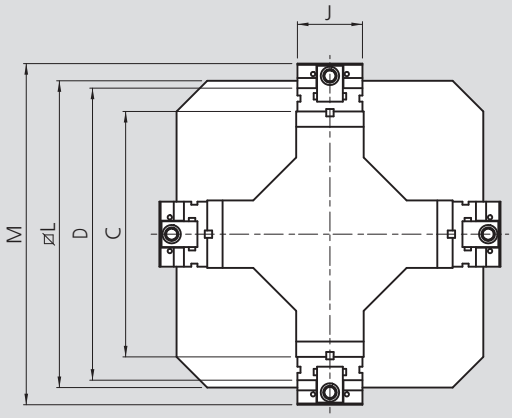

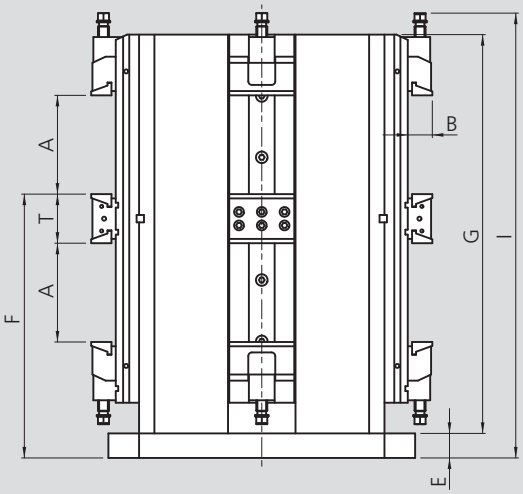

Order review

Type	Id. No.	A [mm]	B [mm]	C [mm]	D [mm]	E [mm]	F [mm]	G [mm]	I [mm]	J [mm]	L [mm]	M [mm]	T [mm]	Weight [kg]
DVCS-TCi 110x155	77586101	155	40	400	476	40	430	650	725	110	500	556	80	352
DVCS-TCi 150x195	77586201	195	50	550	646	45	515	795	890	150	630	746	108	647

Precision bench vise

MCi

- Quick positioning for the jaw
- Maximum flexibility

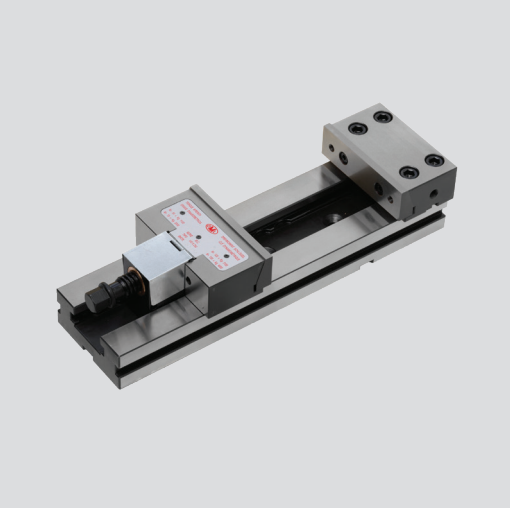

Application/customer benefits

- High precision bench vise
- Quick positioning for the movable jaw
- Pull-down jaws including the possibility to use them without pull down effect
- Easy and quick cleaning possible
- Maximum flexibility due to the wide range of accessories

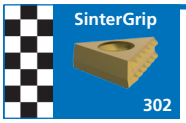

Technical features

- 2 different jaw sizes
- Pull-down jaws (0.2 mm)
- Parallel stripes with quick change „CLAK-System“ see page 285
- Optional: Interface for zero point clamping systems APS / WPS / ZeroAct (on request)
- No side mounting possible

Standard equipment

MCi precision bench vise with clamping wrench, pull-down jaws, jaws for SinterGrip clamping inserts, workstop, protection cover for spindle, parallels with quick change „CLAK-System“, 1 pair 18 mm positioning keys, transport box

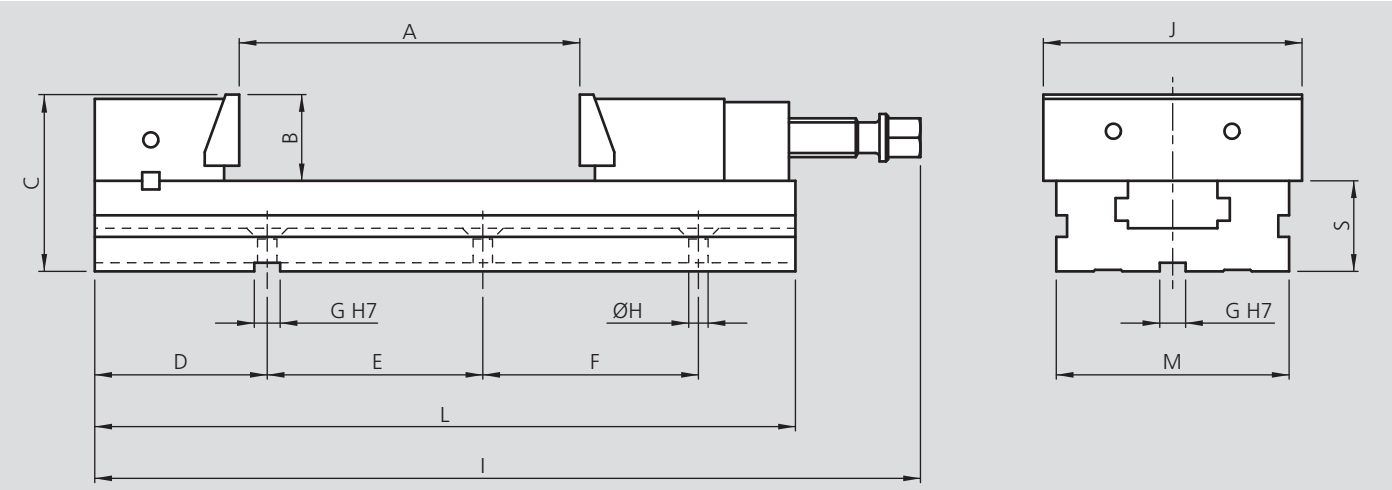

Subject to technical changes.

Order review

Type	Id. No.	A [mm]	B [mm]	C [mm]	D [mm]	E [mm]	F [mm]	G [mm]	H [mm]	I [mm]	J [mm]	L [mm]	M [mm]	O [mm]	S [mm]	Weight [kg]
MCi 150 x 200	77580601	200	50	102	120	200	-	18	12.5	482	150	415	128	85	52	25.5
MCi 150 x 250	77580602	250	50	102	120	100	100	18	12.5	532	150	465	128	85	52	57.5
MCi 150 x 300	77580603	300	50	102	120	100	100	18	12.5	587	150	520	128	85	52	30.4
MCi 200 x 300	77580701	300	70	136	150	150	150	18	12.5	656	200	570	168	109	66	66
MCi 200 x 400	77580702	400	70	136	150	200	200	18	12.5	756	200	670	168	109	66	68

MCi-XL

Precision bench vise

■ Quick positioning for the jaw
■ Extra long clamping range

Application/customer benefits

- High precision bench vise in extra long version
- Quick positioning for the movable jaw
- Pull-down jaws including the possibility to use them without pull down effect
- Easy and quick cleaning possible
- Maximum flexibility due to the wide range of accessories

Technical features

- Pull-down jaws (0.2 mm)
- Parallel stripes with quick change „CLAK-System“ see page 285
- Optional: interface for zero point clamping systems APS / WPS / ZeroAct (on request)

Standard equipment

MCi-XL precision bench vise with clamping wrench, pull-down jaws, workstop, protection cover for spindle, parallels with quick change „CLAK-System“, 1 pair 18 mm positioning keys, transport box

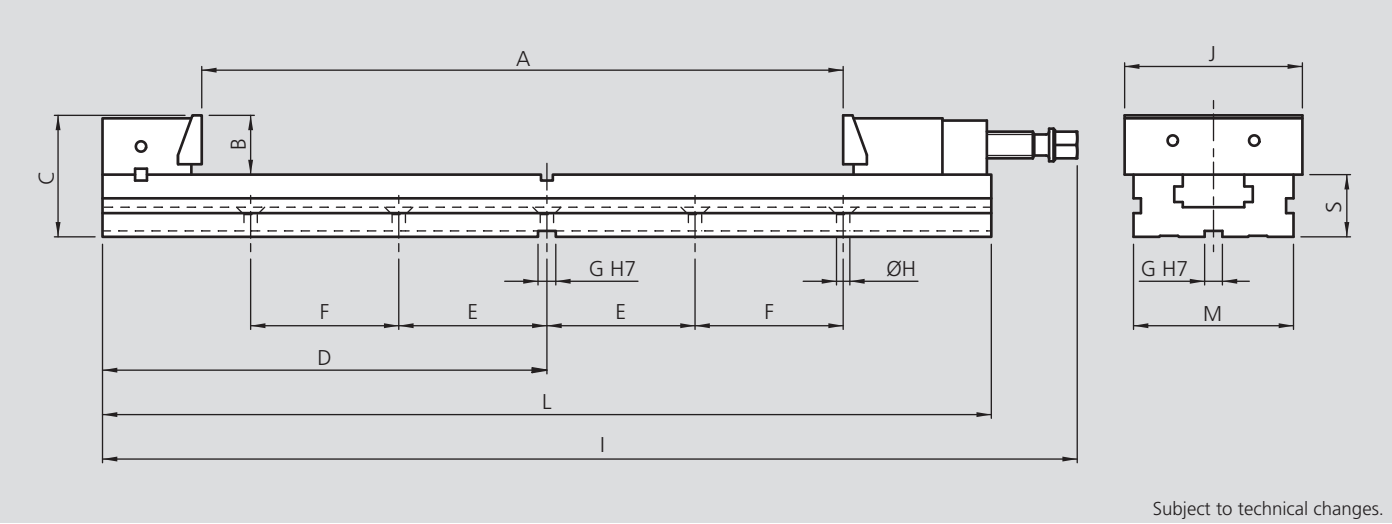

Subject to technical changes.

Order review

Type	Id. No.	A [mm]	B [mm]	C [mm]	D [mm]	E [mm]	F [mm]	G [mm]	H [mm]	I [mm]	J [mm]	L [mm]	M [mm]	S [mm]	Weight [kg]
MCi-XL 150x545	77580604	545	50	102	379	100	150	18	12.5	828	150	758	128	52	37
MCi-XL 150x655	77580605	655	50	102	439	100	200	18	12.5	938	150	878	128	52	41

Precision bench vise

MCi-DC

- Quick positioning for the jaw
- Double clamping system

Application/customer benefits

- High precision bench vise in extra long version
- Quick positioning for the movable jaw
- Pull-down jaws including the possibility to use them without pull down effect
- Easy and quick cleaning possible
- Maximum flexibility due to the wide range of accessories

Technical features

- Pull-down jaws (0.2 mm)
- Parallel stripes with quick change „CLAK-System“ see page 285
- Optional: Interface for zero point clamping systems APS / WPS / ZeroAct (on request)

Standard equipment

MCi-DC precision bench vise with clamping wrench, workstop, protection cover for spindle, parallels with quick change „CLAK-System“, 1 pair positioning keys, transport box

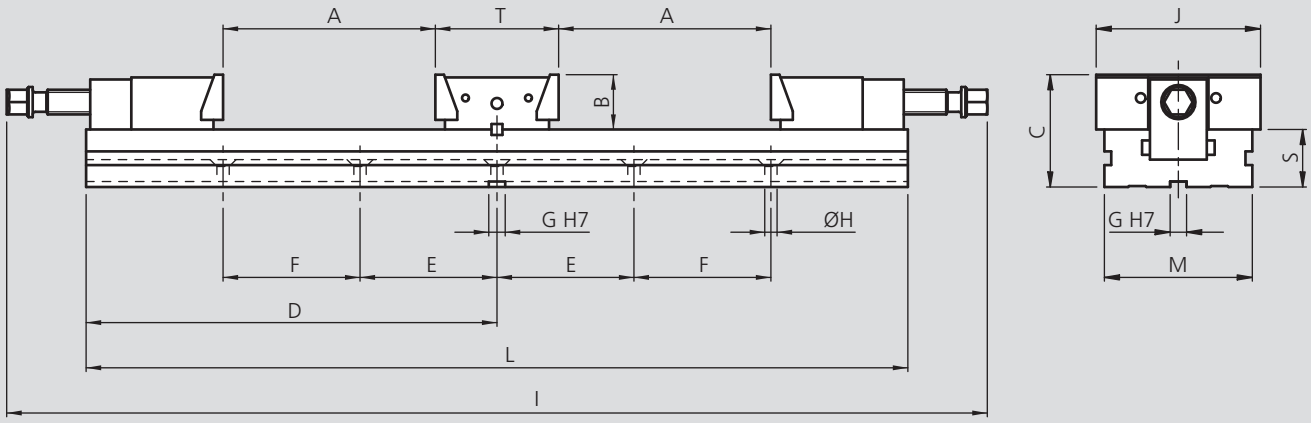

Subject to technical changes.

Order review

Type	Id. No.	A [mm]	B [mm]	C [mm]	D [mm]	E [mm]	F [mm]	G [mm]	H [mm]	I [mm]	J [mm]	L [mm]	M [mm]	S [mm]	T [mm]	Weight [kg]
MCi-DC 150x200	77581601	200	50	102	379	100	150	18	12.5	897	150	758	128	52	103	44
MCi-DC 150x250	77581602	250	50	102	439	100	200	18	12.5	997	150	878	128	52	103	48

Clamping force diagram

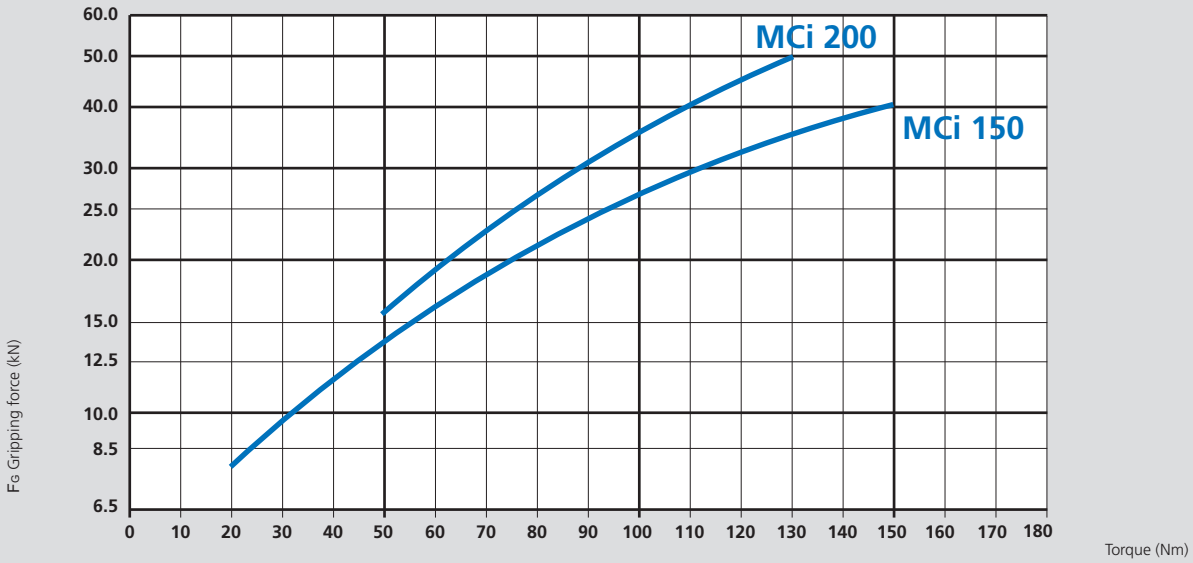

Form, position and dimensional tolerances for all clamping vices MCi

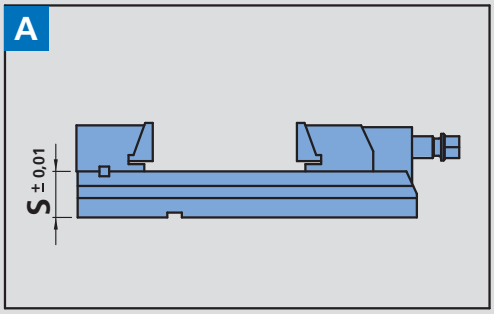

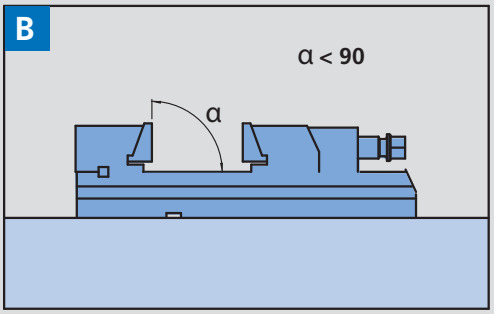

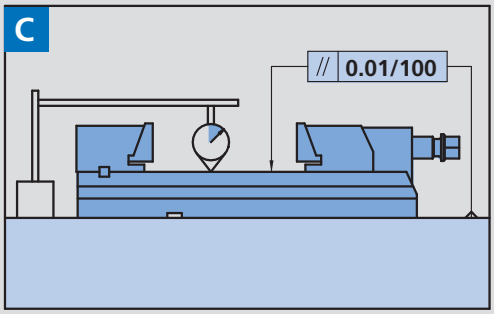

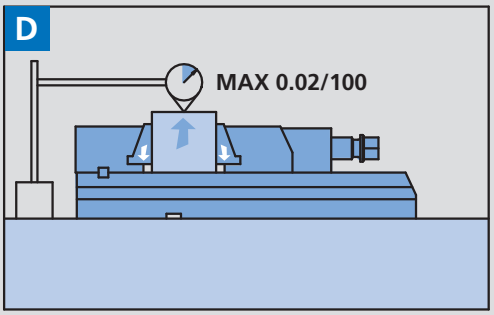

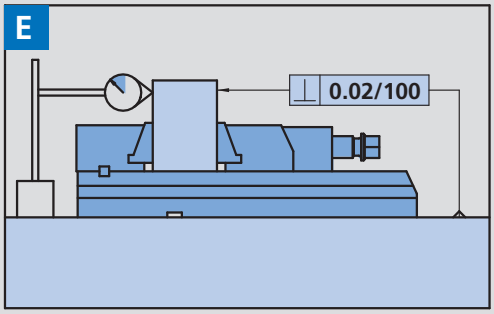

MCi extension element with pair of 18 mm positioning keys

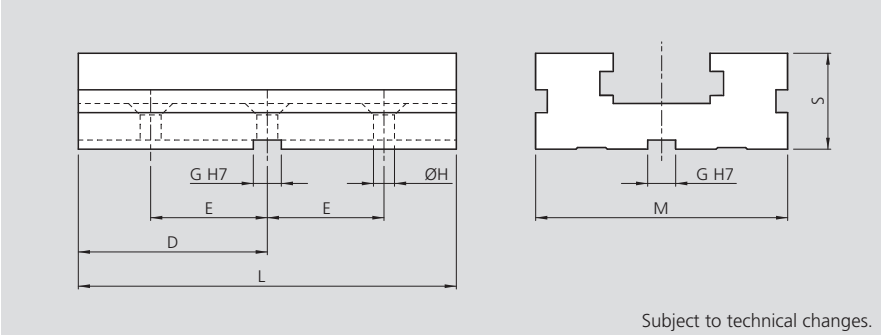

Subject to technical changes.

Type	Id. No.	D [mm]	E [mm]	G [mm]	H [mm]	L [mm]	M [mm]	S [mm]	Weight [kg]
MCi 150	58061700	114	75	18	12.5	228	128	52	8
MCi 200	58071700	140	100	18	12.5	280	168	66	18

MCi double fixed support with jaw

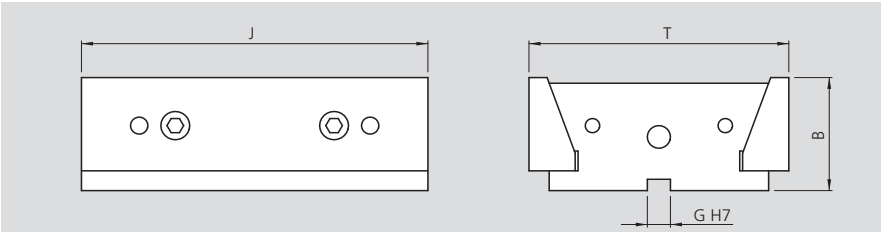

Subject to technical changes.

Type	Id. No.	B [mm]	G [mm]	J [mm]	T [mm]	Weight [kg]
MCi 150	58167210	50	12	150	103	5
MCi 200	58177210	70	18	200	140	15

MCi complete extension element with pair of 18 mm positioning keys

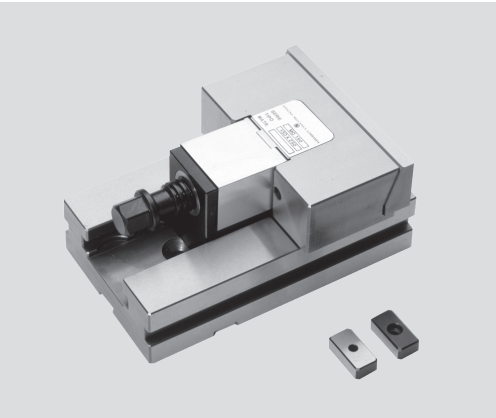

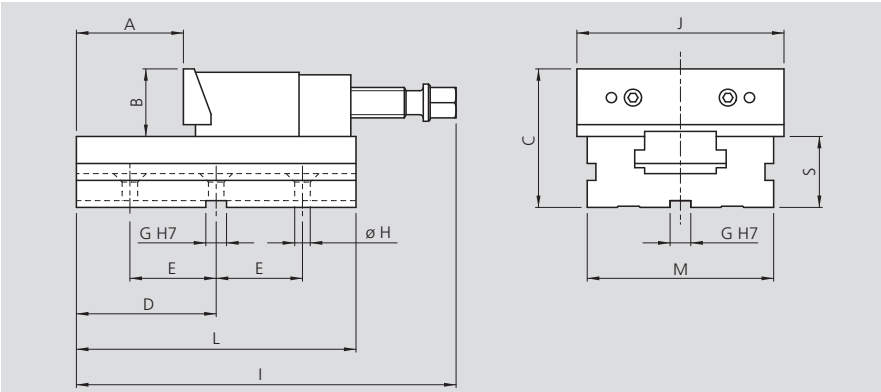

Subject to technical changes.

Type	Id. No.	A [mm]	B [mm]	C [mm]	D [mm]	E [mm]	G [mm]	H [mm]	I [mm]	J [mm]	L [mm]	M [mm]	S [mm]	Weight [kg]
MCi 150	58067110	100	50	102	114	75	18	12.5	295	150	228	128	52	14.5
MCi 200	58077110	120	70	136	140	100	18	12.5	370	200	280	168	66	34.5

MCi base with fixed support with jaw complete with pair of 18 mm positioning keys

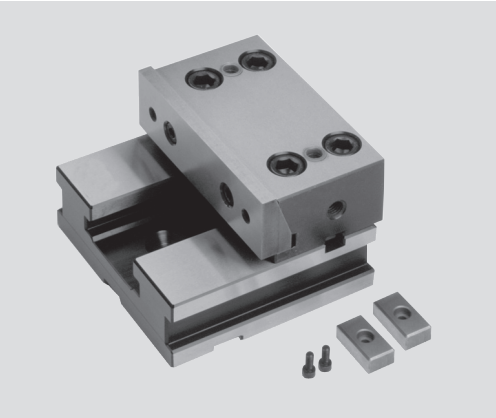

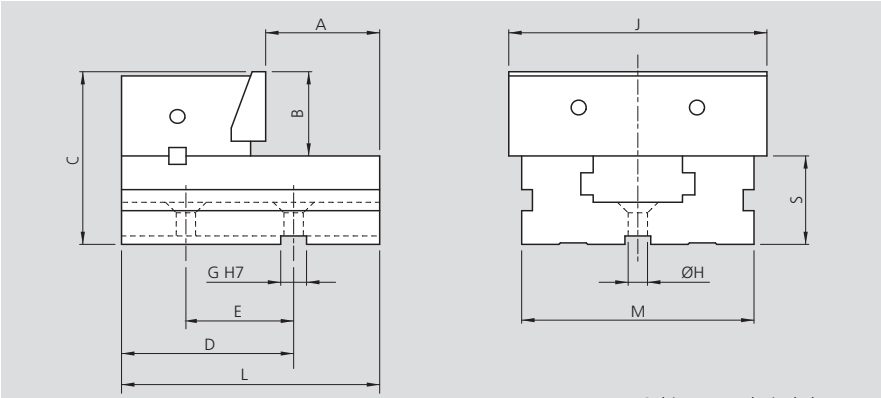

Subject to technical changes.

Type	Id. No.	A [mm]	B [mm]	C [mm]	D [mm]	E [mm]	G [mm]	H [mm]	J [mm]	L [mm]	M [mm]	S [mm]	Weight [kg]
MCi 150	58067010	85	50	102	120	75	18	12.5	150	170	128	52	9.5
MCi 200	58077010	96	70	136	150	100	18	12.5	200	205	168	66	22

MCi base with double fixed support with jaw complete with pair of 18 mm positioning keys

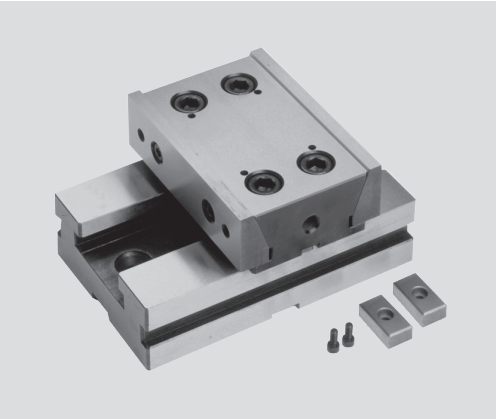

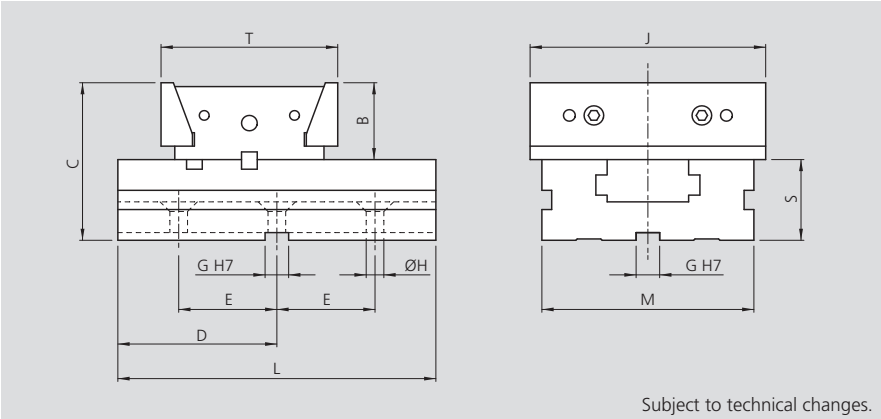

Subject to technical changes.

Type	Id. No.	B [mm]	C [mm]	D [mm]	E [mm]	G [mm]	H [mm]	J [mm]	L [mm]	M [mm]	S [mm]	T [mm]	Weight [kg]
MCi 150	58167010	50	102	100	75	18	12.5	150	200	128	52	103	13
MCi 200	58177010	70	136	125	100	18	12.5	200	250	168	66	140	40

Modular, vertical clamping system

MVS-MCi

- Quick positioning for the jaw
- Maximum flexibility

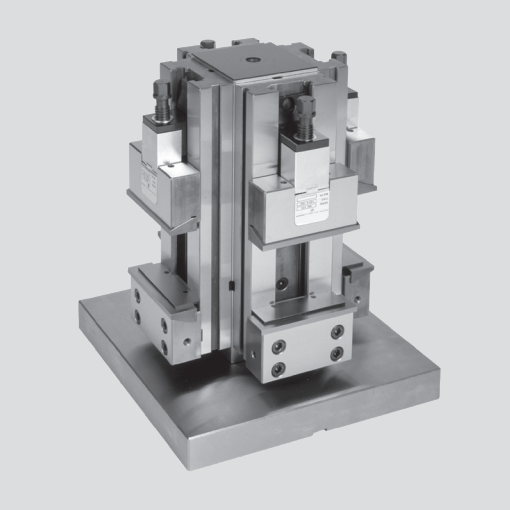

Application/customer benefits

- Steel tombstone ready to use on horizontal machining centres, including 4 MCi vises
- Quick positioning for the movable jaw
- Maximum flexibility due to the wide range of accessories

Technical features

- 2 different jaw sizes
- Pull-down jaws (0.2 mm)
- Parallel stripes with quick change „CLAK-System“ see page 285
- Interface for JIS pallets and for zero point clamping systems APS / WPS / ZeroAct (on request)

Standard equipment

Vertical clamping system complete with: 4 clamping equipment MCi, 1 column, 1 base for vertical system MCi, 4 pairs of SinterGrip jaws, 4 pairs of CLAK parallels, 4 covers for protection of the screws 4 rigid slide-ways, 4 workstops, 4 wrenches, eye bolt for lifting, transport box

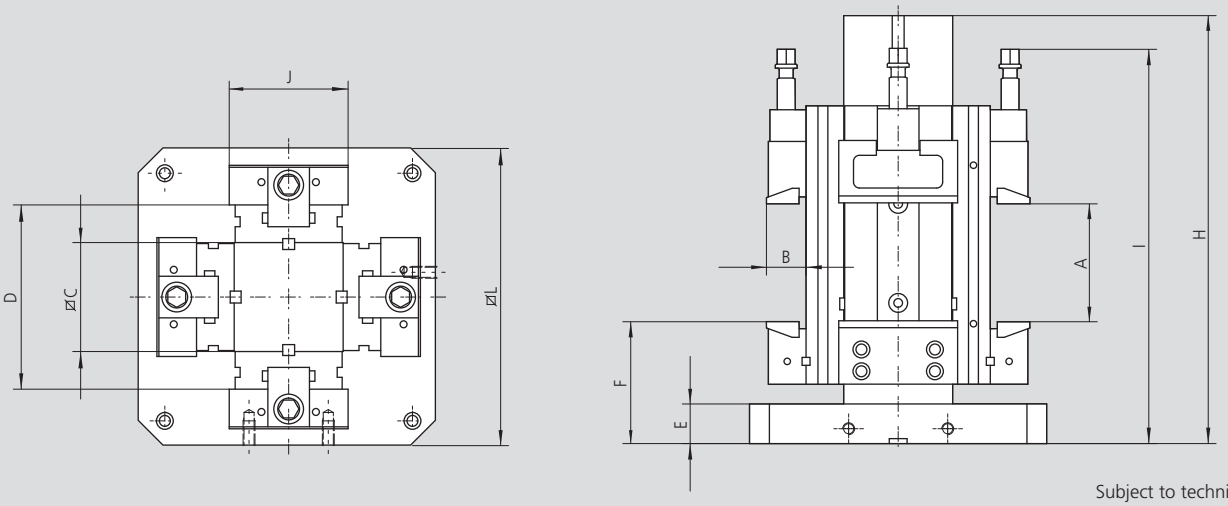

Subject to technical changes.

Order review

Type	Id. No.	A [mm]	B [mm]	C [mm]	D [mm]	E [mm]	F [mm]	H [mm]	I [mm]	J [mm]	L [mm]	Weight [kg]
MVS-MCi 150 x 200	77582621	200	50	150	254	40	146	580	545	150	400	249
MVS-MCi 150 x 250	77582622	250	50	150	254	40	146	580	595	150	400	257
MVS-MCi 150 x 300	77582623	300	50	150	254	40	146	580	650	150	400	267
MVS-MCi 150 x 200	77582631	200	50	150	254	40	146	580	545	150	500	276
MVS-MCi 150 x 250	77582632	250	50	150	254	40	146	580	595	150	500	284
MVS-MCi 150 x 300	77582633	300	50	150	254	40	146	580	650	150	500	294
MVS-MCi 200 x 300	77582731	300	70	200	332	40	159	661	711	200	500	535

MVS-MCi

Modular, vertical clamping system

■ Steel tombstone

Application/customer benefits
- Steel tombstone ready to use on horizontal machining centres

Technical features
- Interface for JIS pallets and for zero point clamping systems APS / WPS / ZeroAct

Standard equipment
Tombstone

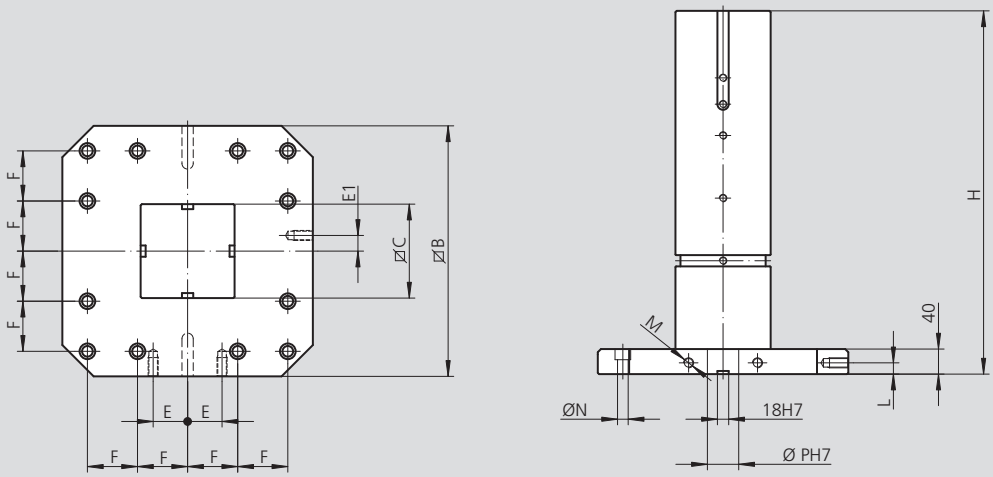

Subject to technical changes.

Order review

Type	Id. No.	B [mm]	C [mm]	E [mm]	E1 [mm]	F [mm]	H [mm]	L [mm]	M [mm]	N [mm]	P [mm]	Weight [kg]
MVS-MCi 150	58228020	400	150	55	25	80	580	18	16	17	50	142
MVS-MCi 150	58228030	500	150	75	25	100	580	18	16	17	50	169
MVS-MCi 200	58238030	500	200	75	25	100	661	18	16	17	50	266

Insert for vertical use

Type	Id. No.
MVS-MCi 150	58223300
MVS-MCi 200	58233300

Modular, vertical clamping system

VCS-MCi

- Quick positioning for the jaw
- Maximum flexibility

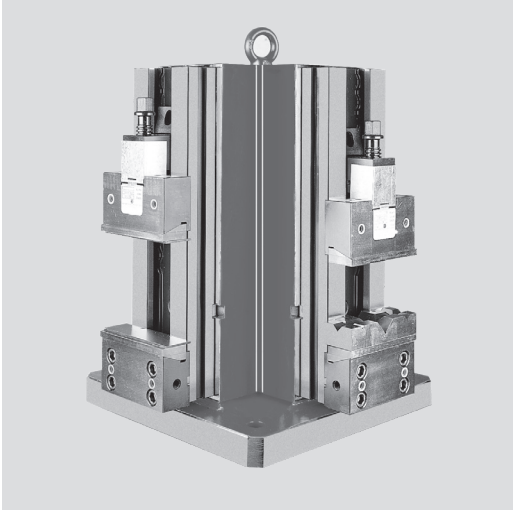

Application/customer benefits

- Steel tombstone ready to use on horizontal machining centres, including 4 MCi vises
- Quick positioning for the movable jaw
- Maximum flexibility due to the wide range of accessories

Technical features

- 2 different jaw sizes
- Pull-down jaws (0.2 mm)
- Parallel stripes with quick change „CLAK-System“ see page 285
- Interface for JIS pallets and for zero point clamping systems APS / WPS / ZeroAct (on request)

Standard equipment

Vertical clamping system complete with: 4 clamping equipment MCi, 1 cross tombstone for vertical system MCi, 4 pairs of SinterGrip jaws, 4 pairs of CLAK parallels, 4 covers for protection of the screws 4 rigid slide-ways, 4 work stops, 4 wrenches, eye bolt for lifting, transport box

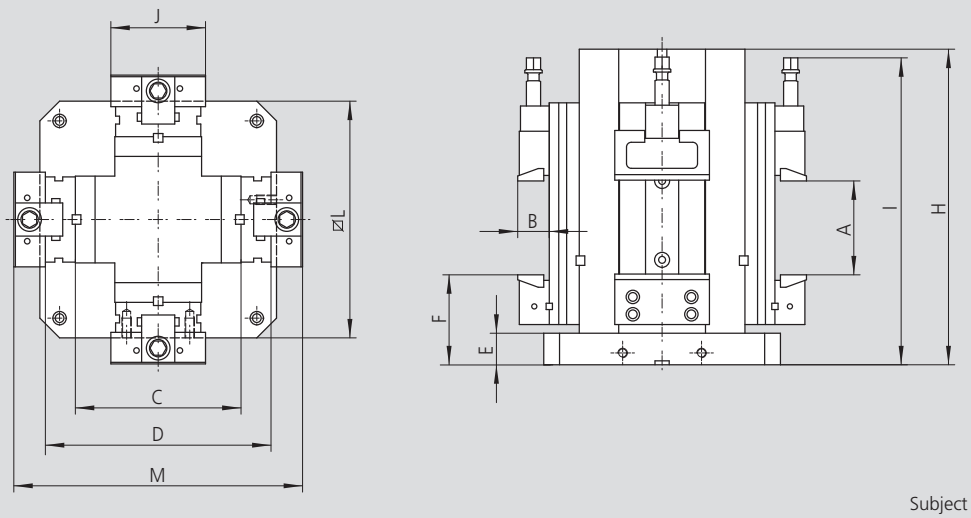

Subject to technical changes.

Order review

Type	Id. No.	A [mm]	B [mm]	C [mm]	D [mm]	E [mm]	F [mm]	H [mm]	I [mm]	J [mm]	L [mm]	M [mm]	Weight [kg]
VCS-MCi 150 x 200	77585621	200	50	300	404	40	140	580	540	150	400	504	314
VCS-MCi 150 x 250	77585622	250	50	300	404	40	140	580	590	150	400	504	322
VCS-MCi 150 x 300	77585623	300	50	300	404	40	140	580	647	150	400	504	332
VCS-MCi 150 x 200	77585631	200	50	300	404	40	140	580	540	150	500	504	342
VCS-MCi 150 x 250	77585632	250	50	300	404	40	140	580	590	150	500	504	350
VCS-MCi 150 x 300	77585633	300	50	300	404	40	140	580	547	150	500	504	360
VCS-MCi 200 x 300	77585741	300	70	350	482	45	168	670	720	200	630	622	627

Working examples

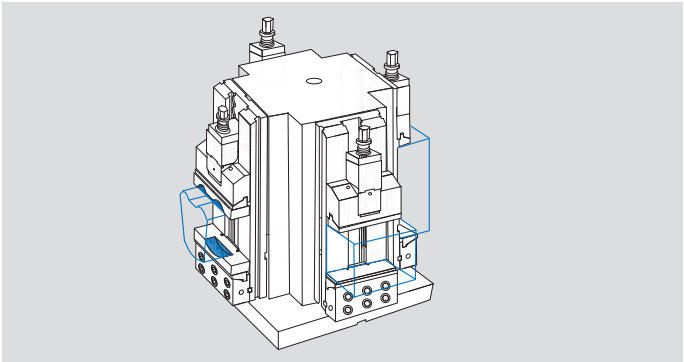

DVCS-MCi

Modular, vertical clamping system

- **Quick positioning for the jaw**
- **Maximum flexibility**

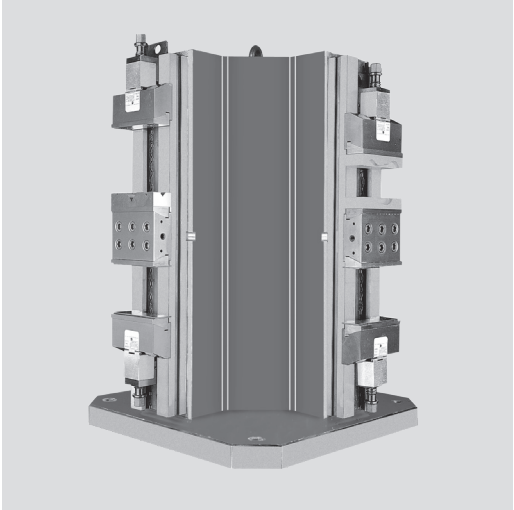

Application/customer benefits

- Ready to use vertical clamping system including 4 MCi vises
- Quick positioning for the movable jaw
- Extra long clamping range
- Maximum flexibility due to the wide range of accessories

Technical features

- Pull-down jaws (0.2 mm)
- Parallel stripes with quick change „CLAK-System“ see page 285
- Optional: Interface for zero point clamping systems APS / WPS / ZeroAct (on request)

Standard equipment

Vertical clamping system complete with: 4 double clamping equipment MCi-DC, 1 cross tombstone XL, 8 pairs parallels with quick change „CLAK-System, 8 covers for protection of the screws, 8 rigid slide-ways, 8 workstops, eye bolt for lifting, 8 wrenches, transport box

Subject to technical changes.

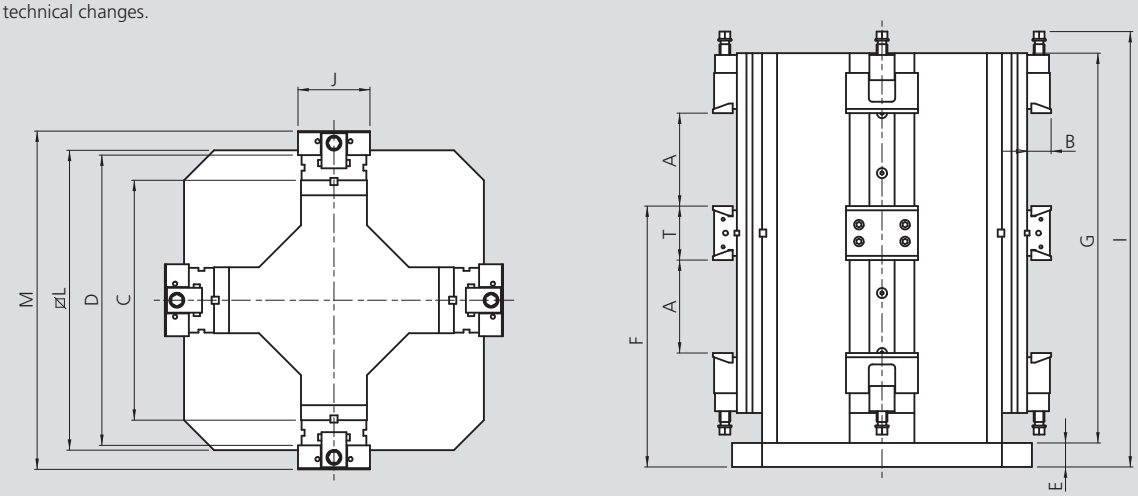

Order review

Type	Id. No.	A [mm]	B [mm]	C [mm]	D [mm]	E [mm]	F [mm]	G [mm]	I [mm]	J [mm]	L [mm]	M [mm]	T [mm]	Weight [kg]
DVCS-MCi 150x200	77586601	200	50	550	654	45	515	795	890	150	630	754	103	680

Cross cube for VCS-TCi; -MCi

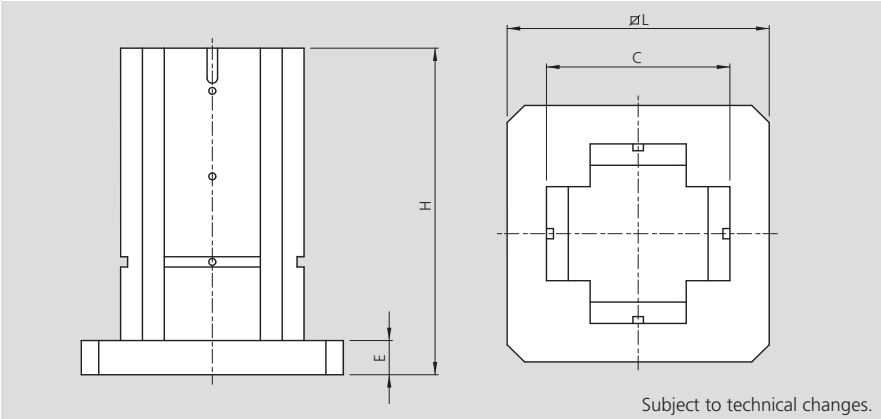

Type	Id. No.	C [mm]	E [mm]	H [mm]	L [mm]	Weight [kg]
VCS 150	58528020	300	40	580	400	212
VCS 150	58528030	300	40	580	500	240
VCS 200	58538040	350	45	670	630	363

Cross cube for DVCS-TCi; -MCi

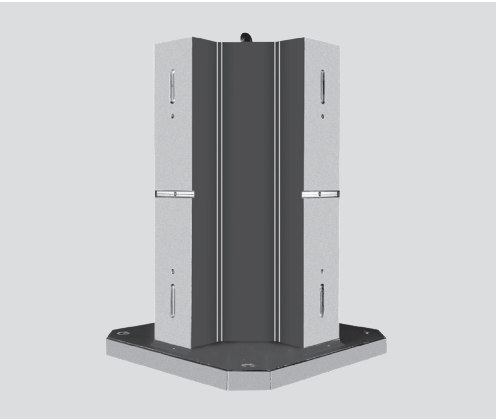

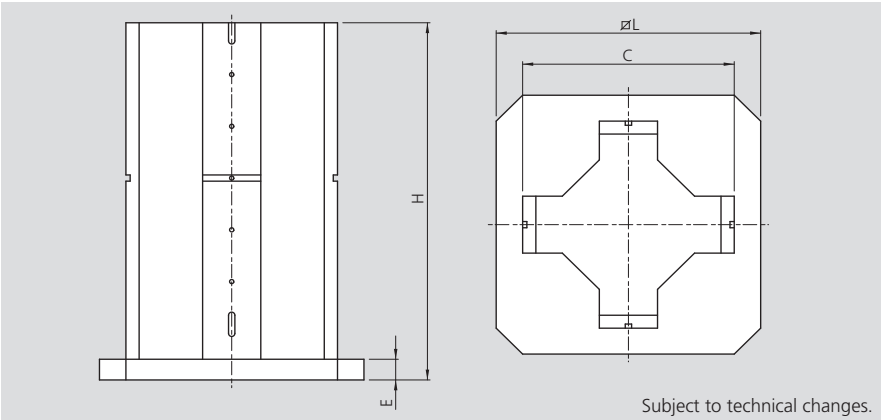

Type	Id. No.	C [mm]	E [mm]	H [mm]	L [mm]	Weight [kg]
DVCS 150	58628000	550	45	840	630	475

Insert for vertical use

Typ	Id. No.
MCi 150	58223300
MCi 200	58233300

Clamps (1 pair) incl. screw and T-nut

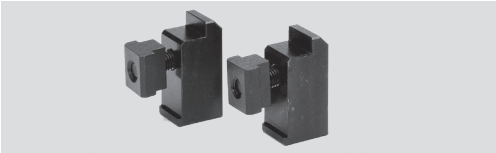

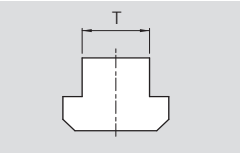

Type	Id. No. / Groove width					
	12 mm	14 mm	16 mm	18 mm	20 mm	22 mm
MCi 150	58022792	58022793	58022794	58022795	58022796	58022797
MCi 200	58032792	58032793	58032794	58032795	58032796	58032797

T-nuts (1 pair) incl. screw

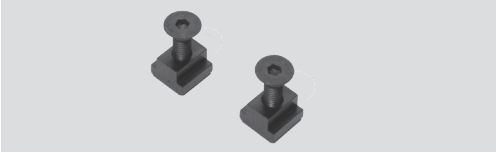

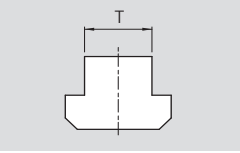

Type	Id. No. / Groove width					
	12 mm	14 mm	16 mm	18 mm	20 mm	22 mm
MCi 150	58022592	58022593	58022594	58022595	58022596	58022597
MCi 200	58032592	58032593	58032594	58032595	58032596	58032597

Key way with standard dimensions (1 pair)

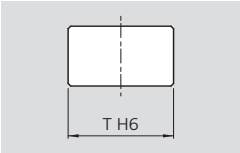

Type	Id. No. / Groove width 12h6 mm
MCi 150	58021395
MCi 200	58021395

Key way with special dimensions (1 pair)

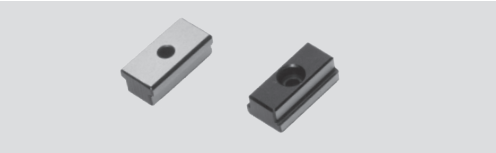

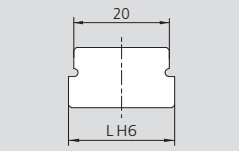

Type	Id. No. / Groove width				
	12h6 mm	14h6 mm	16h6 mm	20h6 mm	22h6 mm
MCi 150	58021392	58021393	58021394	58021396	58021397
MCi 200	58021392	58021393	58021394	58021396	58021397

Precision bench vise

CLAK-System

- Parallels for quick change CLAK-System
- Suitable for TCi and MCi vices

This new patented system allows the quick change of parallels, angular parallels, V-jaws, soft jaws for any type of workpieces.

Benefits:

- Reduce downtime and set-up time
- Elimination of clamps and locks thanks to the patented self locking system
- Increase the accuracy of finished parts and reduce scrap

All components are case hardened and precision ground.

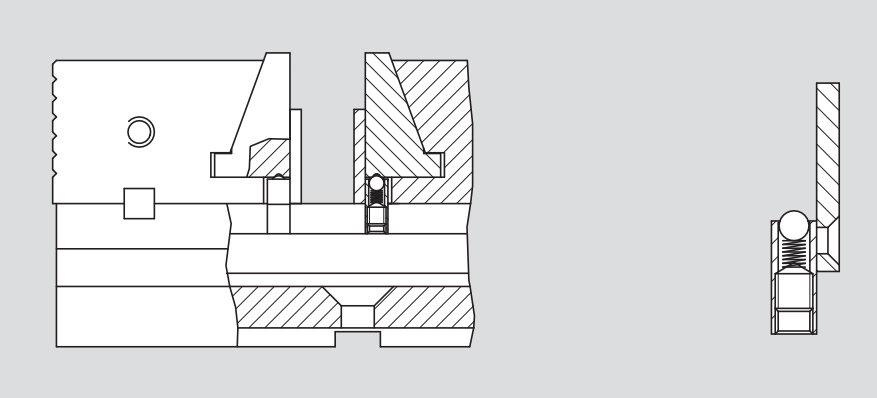

Set 6 pairs of parallels for quick change CLAK-System

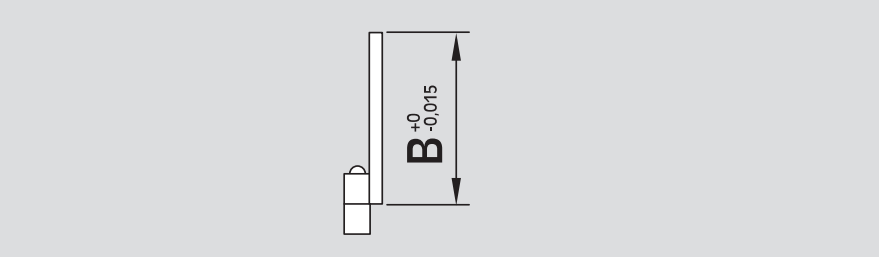

Type	Id. No.	B					
		[mm]	[mm]	[mm]	[mm]	[mm]	[mm]
TCi 110	58019206	10	15	20	25	30	35
TCi / MCi 150	58029206	20	25	30	35	40	45
TCi / MCi 200	58039206	20	30	40	50	60	65

Set 10 pairs of parallels for quick change CLAK-System

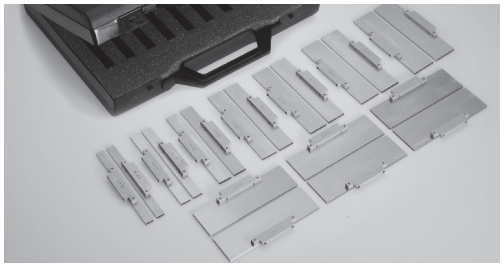

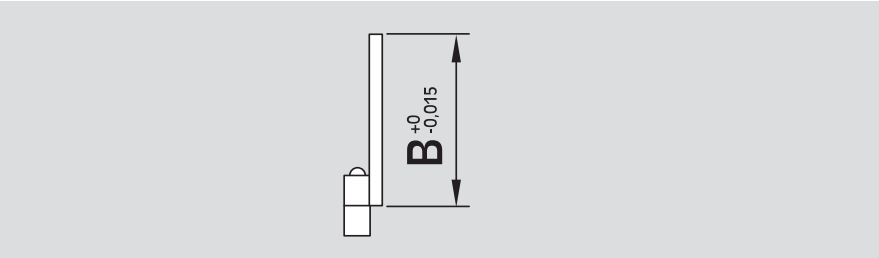

Type	Id. No.	B									
		[mm]	[mm]	[mm]	[mm]	[mm]	[mm]	[mm]	[mm]	[mm]	[mm]
TCi 110	58019210	10	12	15	20	25	28	30	33	35	37
TCi / MCi 150	58029210	12	15	20	25	30	35	40	43	45	47
TCi / MCi 200	58039210	20	25	30	35	40	45	50	55	60	65

Set 6 pairs of prism parallels for quick change CLAK-System

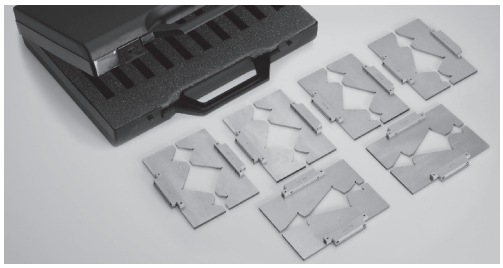

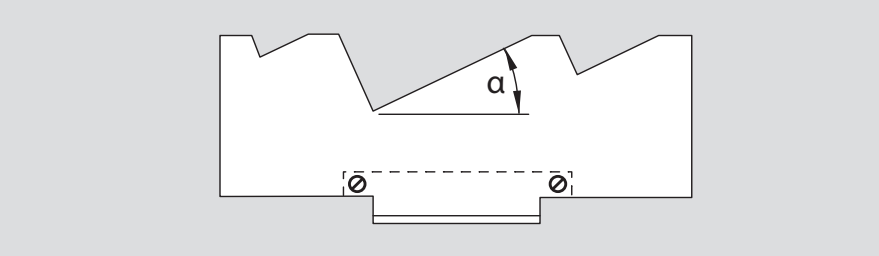

Type	Id. No.	α					
		[mm]	[mm]	[mm]	[mm]	[mm]	[mm]
TCi 110	58019306	20°	25°	30°	35°	40°	45°
TCi / MCi 150	58029306	20°	25°	30°	35°	40°	45°
TCi / MCi 200	58039306	20°	25°	30°	35°	40°	45°

CLAK-System

Precision bench vise

- Parallels for quick change CLAK-System
- Suitable for TCi and MCi vices

Parallels (1 pair)

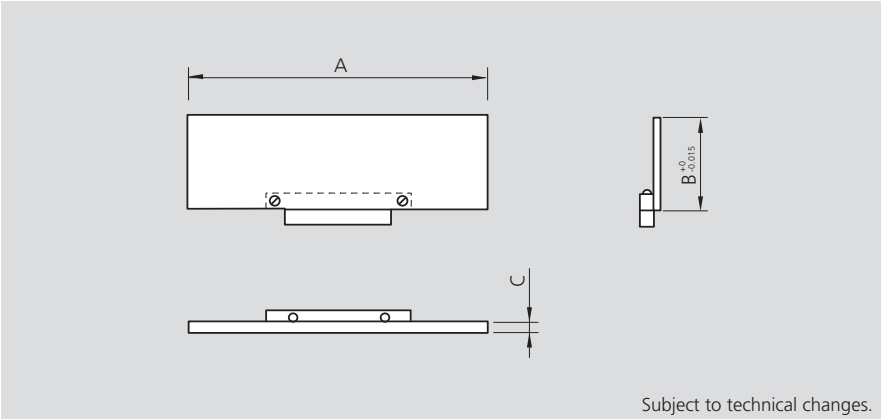

Subject to technical changes.

Type	Id. No.	B [mm]	A [mm]	C [mm]
TCi 110	58013510	10	106	3
TCi 110	58013512	12	106	3
TCi 110	58013515	15	106	3
TCi 110	58013520	20	106	3
TCi 110	58013525	25	106	3
TCi 110	58013528	28	106	3
TCi 110	58013530	30	106	3
TCi 110	58013533	33	106	3
TCi 110	58013535	35	106	3
TCi 110	58013537	37	106	3
TCi 150 / MCi 150	58023512	12	146	3
TCi 150 / MCi 150	58023515	15	146	3
TCi 150 / MCi 150	58023520	20	146	3
TCi 150 / MCi 150	58023525	25	146	3
TCi 150 / MCi 150	58023530	30	146	3
TCi 150 / MCi 150	58023535	35	146	3
TCi 150 / MCi 150	58023540	40	146	3
TCi 150 / MCi 150	58023543	43	146	3
TCi 150 / MCi 150	58023545	45	146	3
TCi 150 / MCi 150	58023547	47	146	3
TCi 200 / MCi 200	58033520	20	196	4
TCi 200 / MCi 200	58033525	25	196	4
TCi 200 / MCi 200	58033530	30	196	4
TCi 200 / MCi 200	58033535	35	196	4
TCi 200 / MCi 200	58033540	40	196	4
TCi 200 / MCi 200	58033545	45	196	4
TCi 200 / MCi 200	58033550	50	196	4
TCi 200 / MCi 200	58033555	55	196	4
TCi 200 / MCi 200	58033560	60	196	4
TCi 200 / MCi 200	58033565	65	196	4

Application examples

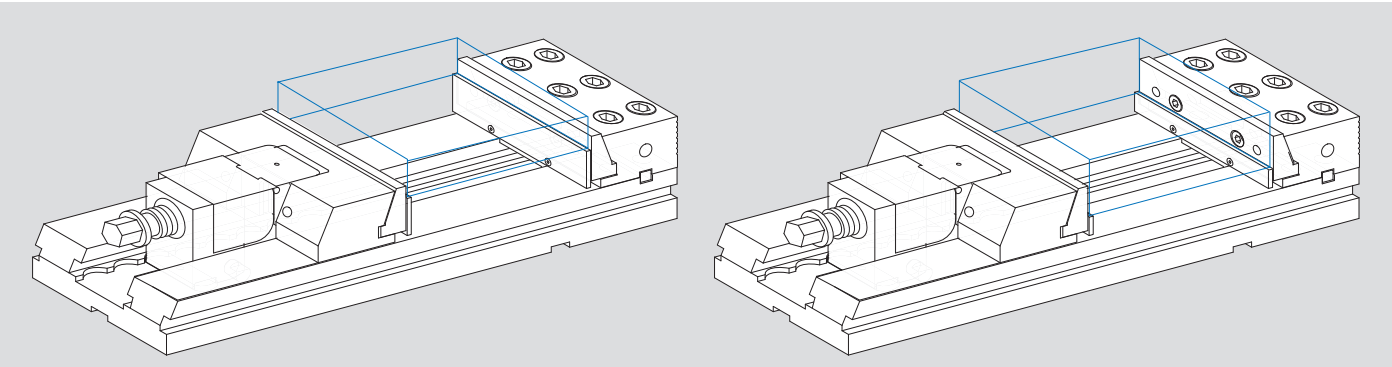

Precision bench vise

CLAK-System

- Parallels for quick change CLAK-System
- Suitable for TCi and MCi vices

Angular parallels (1 pair)

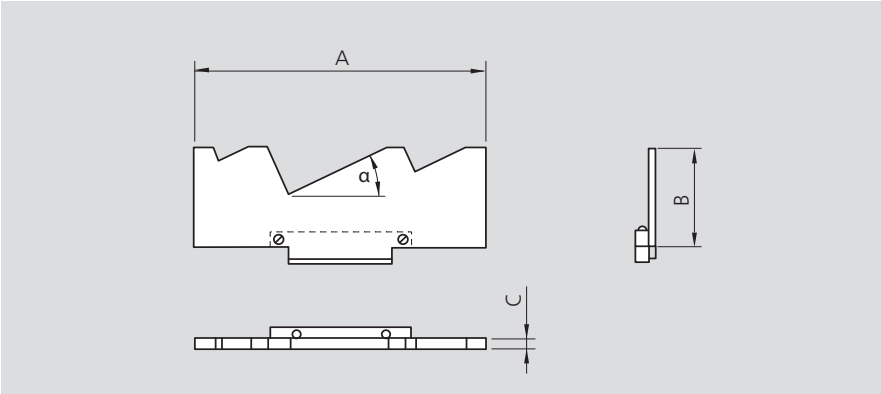

Subject to technical changes.

Type	Id. No.	α [mm]	A [mm]	B [mm]	C [mm]
TCi 110	58013620	20	106	40	4
TCi 110	58013625	25	106	40	4
TCi 110	58013630	30	106	40	4
TCi 110	58013635	35	106	40	4
TCi 110	58013640	40	106	40	4
TCi 110	58013645	45	106	40	4
TCi 150 / MCi 150	58023620	20	146	50	4
TCi 150 / MCi 150	58023625	25	146	50	4
TCi 150 / MCi 150	58023630	30	146	50	4
TCi 150 / MCi 150	58023635	35	146	50	4
TCi 150 / MCi 150	58023640	40	146	50	4
TCi 150 / MCi 150	58023645	45	146	50	4
TCi 200 / MCi 200	58033620	20	196	70	4
TCi 200 / MCi 200	58033625	25	196	70	4
TCi 200 / MCi 200	58033630	30	196	70	4
TCi 200 / MCi 200	58033635	35	196	70	4
TCi 200 / MCi 200	58033640	40	196	70	4
TCi 200 / MCi 200	58033645	45	196	70	4

Application examples

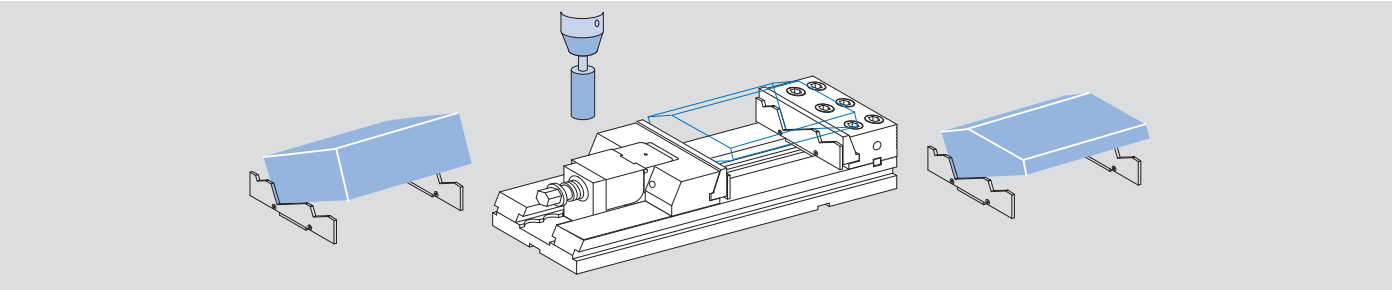

V-jaw

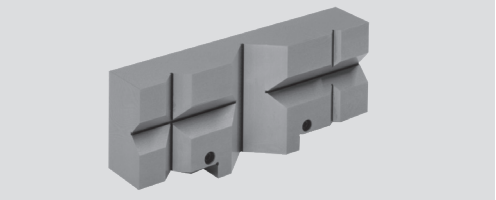

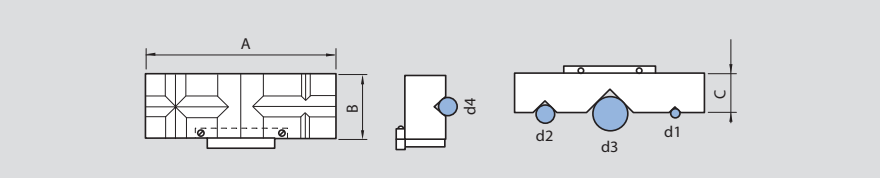

Subject to technical changes.

Type	Id. No.	A [mm]	B [mm]	C [mm]	D1		D2		D3		D4	
					min.-mm	max.-mm	min.-mm	max.-mm	min.-mm	max.-mm	min.-mm	max.-mm
TCi 110	58019409	106	40	30	3	6.5	6.5	15	15	35	7	16
TCi 150 / MCi 150	58029409	146	50	30	3	6.5	6.5	15	15	35	7	16
TCi 200 / MCi 200	58039409	196	70	50	6	13	13	30	30	70	15	35

CLAK-System

Precision bench vise

- Aluminium and steel soft jaws
- Suitable for TCi and MCi vices

Aluminium jaws (1 pair)

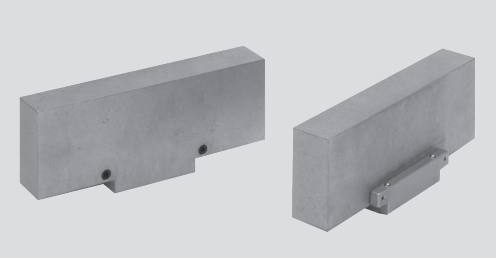

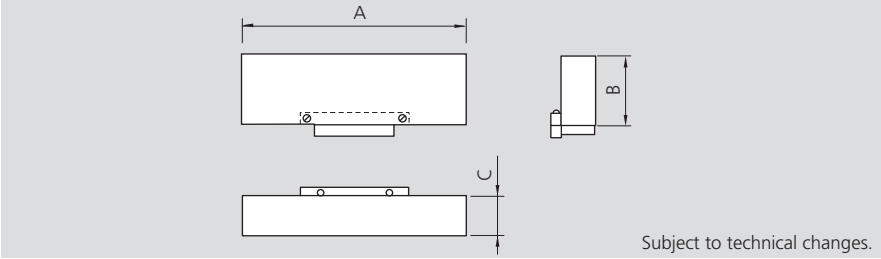

Type	Id. No.	A [mm]	B [mm]	C [mm]
TCi 110	58019509	106	40	19
TCi 150 / MCi 150	58029509	146	50	24
TCi 200 / MCi 200	58039509	196	70	34

Steel soft jaws (1 pair)

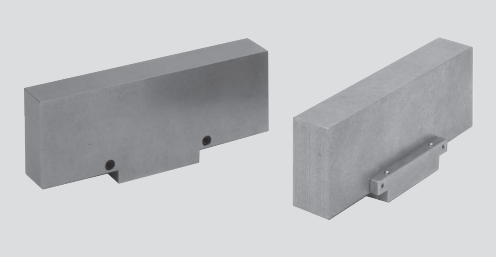

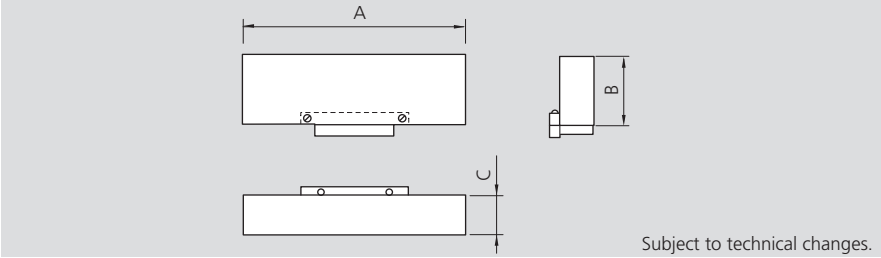

Type	Id. No.	A [mm]	B [mm]	C [mm]
TCi 110	58019609	106	40	19
TCi 150 / MCi 150	58029609	146	50	24
TCi 200 / MCi 200	58039609	196	70	34

Application examples

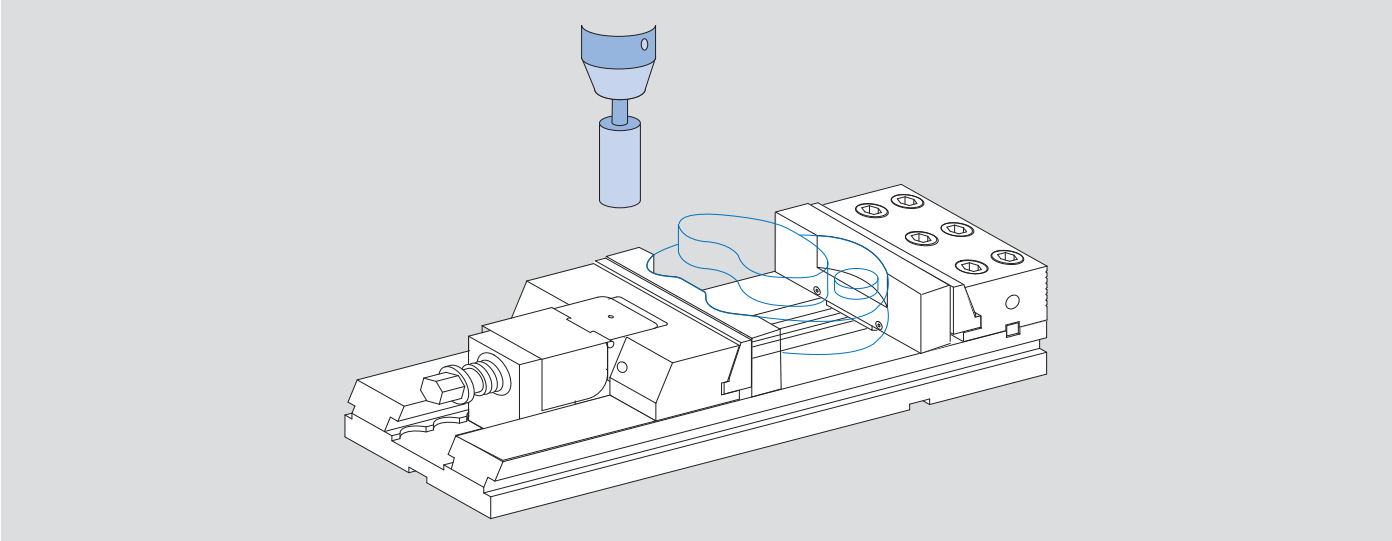

Middle jaw CLAK-System

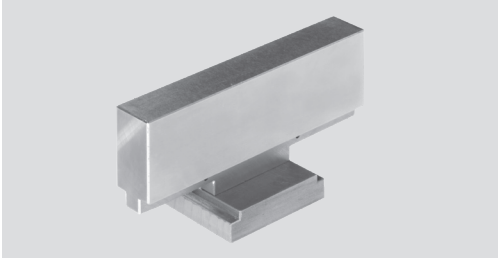

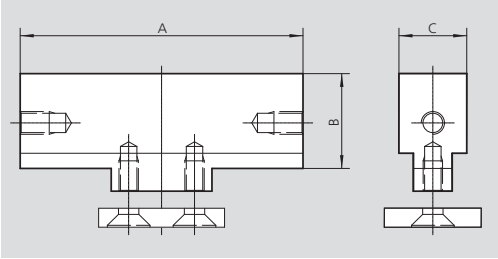

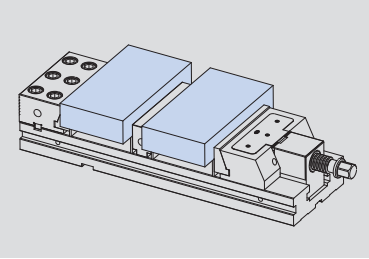

Type	Id. No.	A [mm]	B [mm]	C [mm]
TCi 110	58014109	106	40	32
TCi 150 / MCi 150	58024109	146	50	32
TCi 200 / MCi 200	58034109	196	70	48

Jaw with rolls

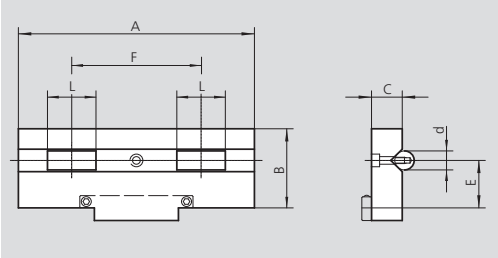

Workpiece with machined surface

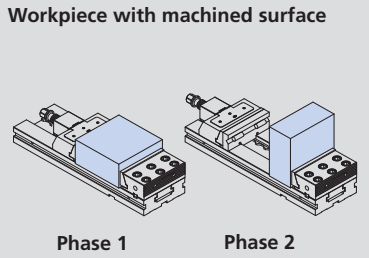

Type	Id. No.	A [mm]	B [mm]	C [mm]	d [mm]	E [mm]	F [mm]	L [mm]
TCi 110	58019709	106	40	19	12	25	60	30
TCi 150 / MCi 150	58029709	146	50	19	12	30	80	30
TCi 200 / MCi 200	58039709	196	70	28	16	40	110	40

Jaws (1 pair) with grippers UGE

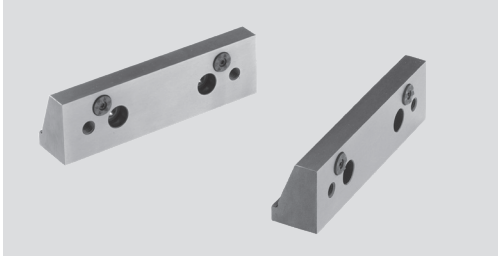

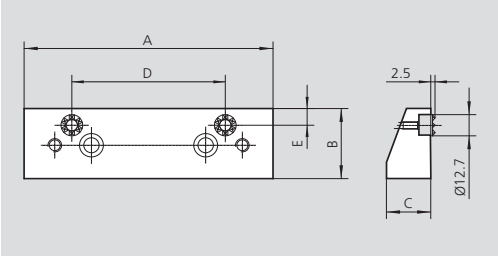

For raw workpieces

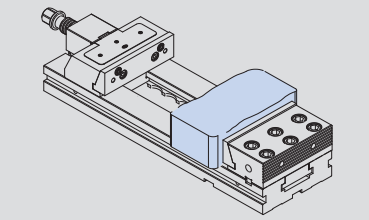

Type	Id. No.	A [mm]	B [mm]	C [mm]	D [mm]	E [mm]
TCi 150 / MCi 150	58024509	146	42	26	90	10
TCi 200 / MCi 200	58034509	196	60	31	160	12

TTi-2G

NC High clamping vise

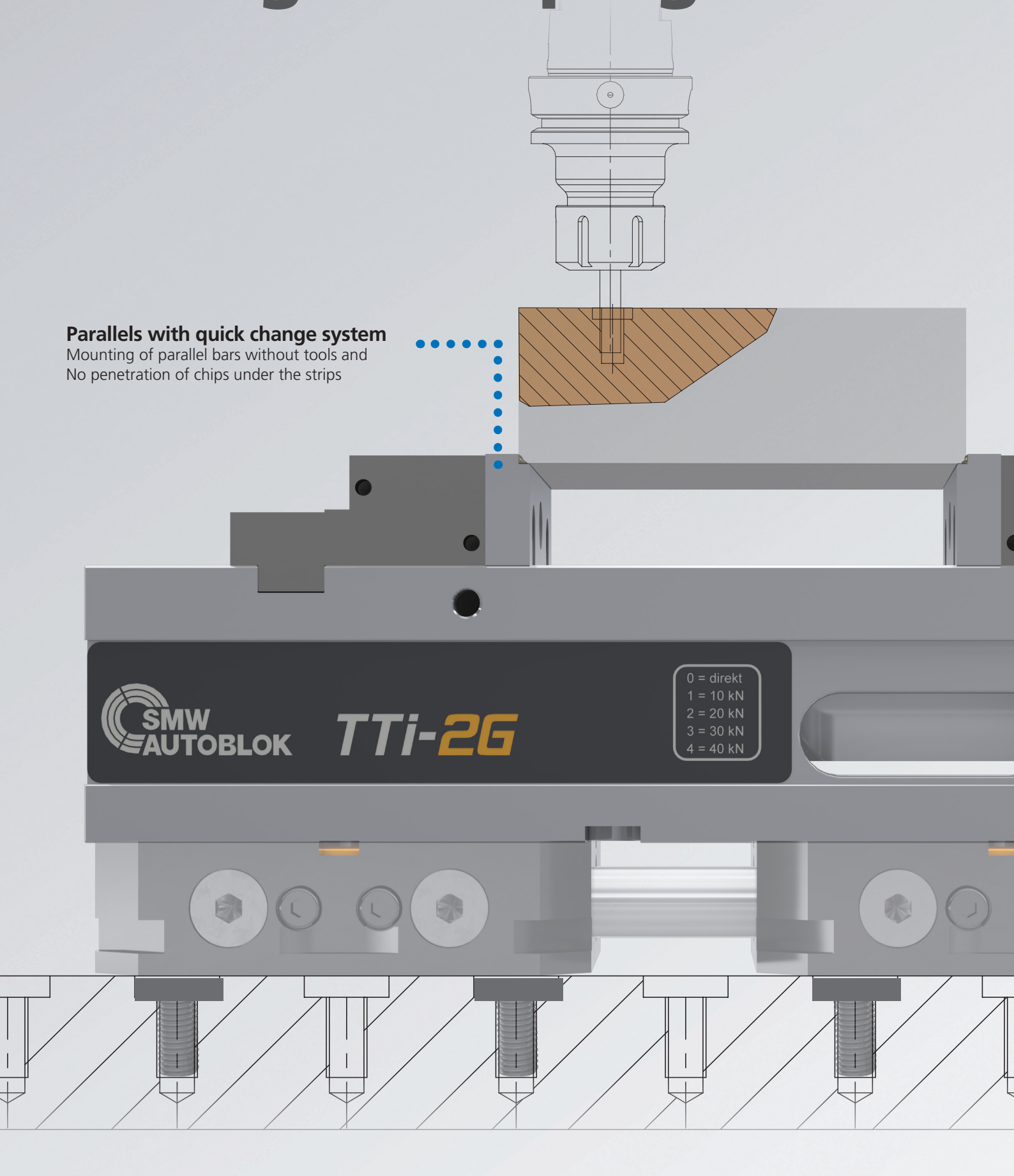

Parallels with quick change system
Mounting of parallel bars without tools and
No penetration of chips under the strips

SinterGrip

SinterGrip
Page 302

Jaws for SinterGrip clamping inserts as accessories for OP 10 machining available

Quick change system of the spindle unit

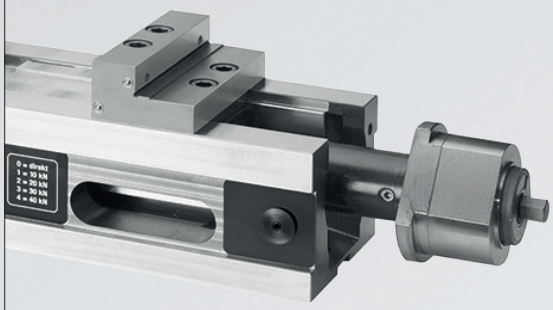

- Removal of the spindle unit without tools
- Therefore easy and quick cleaning
- Fastening possible through the base body

Angle drive (accessory)

- Easy use on the machine table
- Best accessibility for the setting of the clamping force

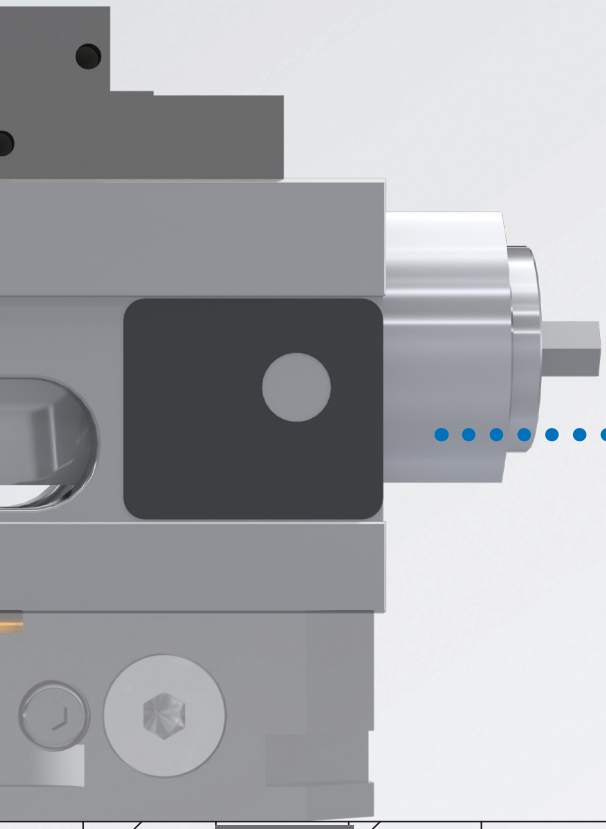

Protected spindle with

- power transmitter
- Exact pre-select of the clamping force
- (up to 11 steps)
  Constant clamping force for maximum process reliability

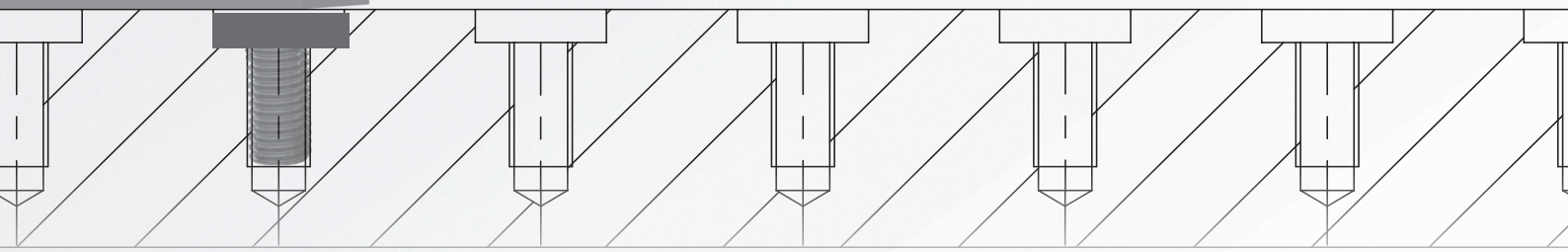

TTi-2G

NC clamping vise

■ With precision power transmitter
■ Clamping against fixed jaw

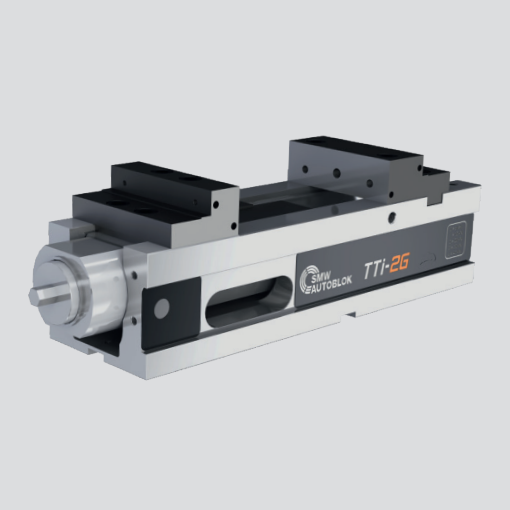

Application/customer benefits

- NC clamping vise with precision power transmitter for high clamping forces
- Maintenance-free encapsulated spindle
- Accurate and highest repeatability of the clamping process
- Easy and quick cleaning possibility
- Maximum flexibility due to the huge range of accessories
- Clamping force pre-adjustment (up to 11 clamping steps)
- Standardized jaw interface (Allmatic compatible)
- Parallels with quick change

Technical features

- High clamping forces (up to 60 kN)
- 3 different sizes
- Precision guideway hardened and ground
- Interface for zero point clamping systems APS / WPS / ZeroAct as a standard

Standard equipment

TTi-2G clamping vise together with hand crank and stepped top jaws,
4 pieces of clamps for fixing

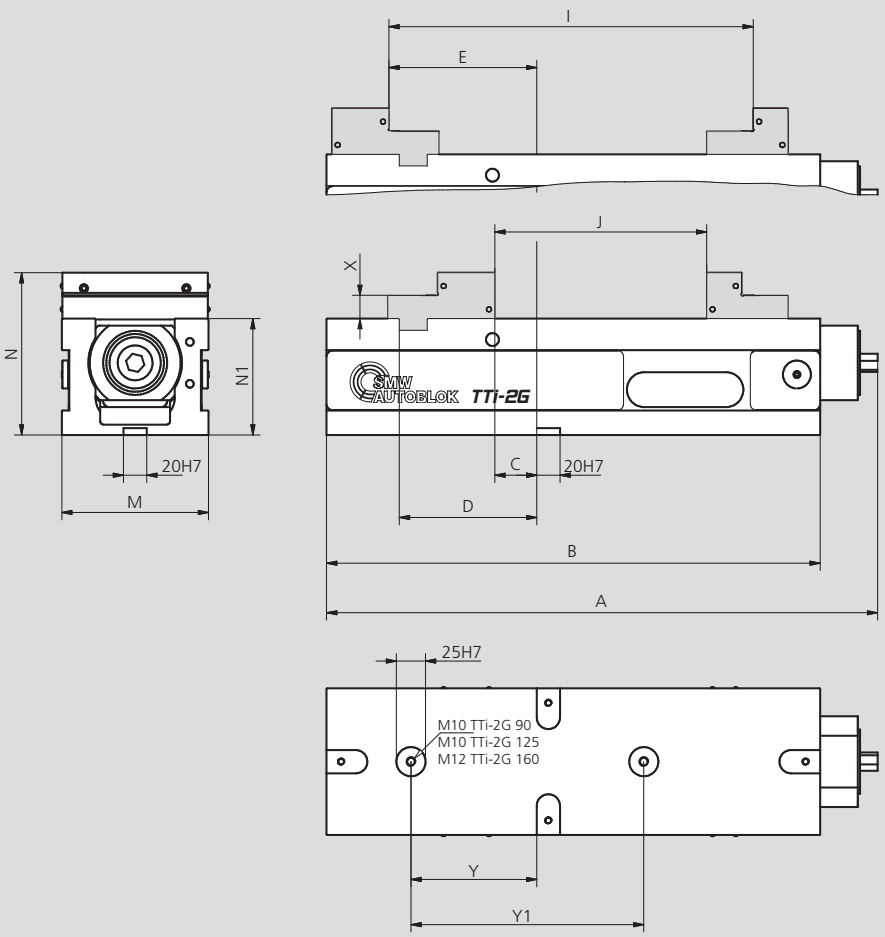

Subject to technical changes.

Order review

Type	Id. No.	A [mm]	B [mm]	C [mm]	D [mm]	E [mm]	J [mm]	I [mm]	M [mm]	N [mm]	N1 [mm]	X [mm]	Y [mm]	Y1 [mm]	Clamping force [kN]	Weight [kg]
TTi-2G 90	462734	340	305	15	73	75	0-126	91-217	90	114	80	16	58	200	28	15
TTi-2G 125	462735	483	424	36	118	127	0-185	131-313	126	139.5	100	20	108	200	40	35
TTi-2G 160	462736	616	560	70	164	178	17-263	187-433	164	164.8	115	25	114	300	60	60

NC clamping vise

TTi-2G

- With precision power transmitter
- Clamping against fixed jaw

Clamping force diagram

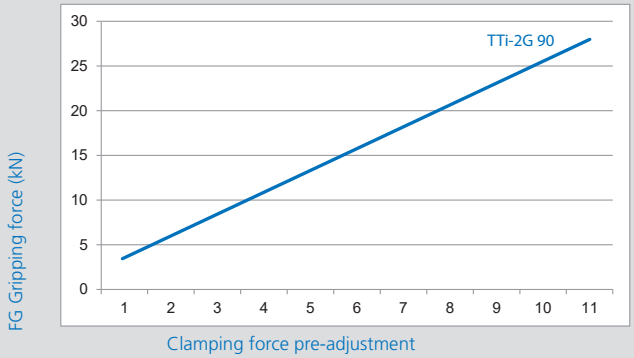

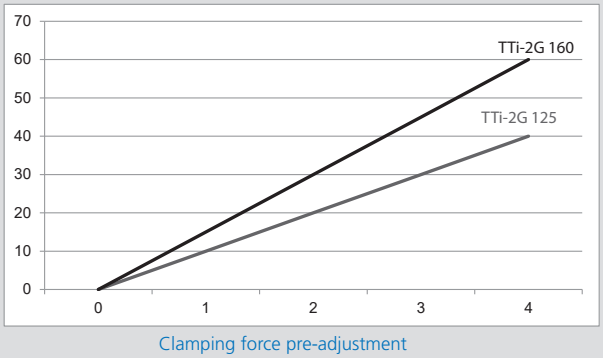

Form, position and dimensional tolerances for all NC clamping vises TTi-2G

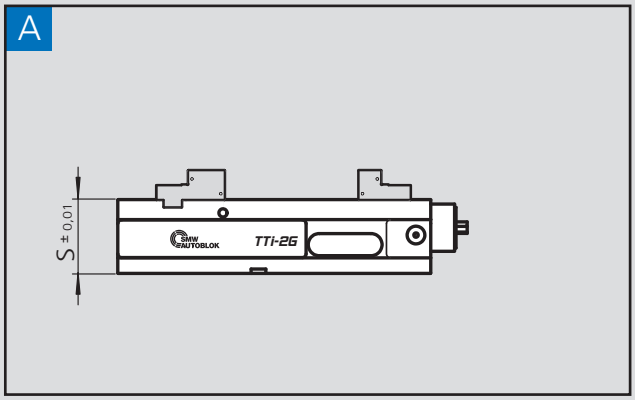

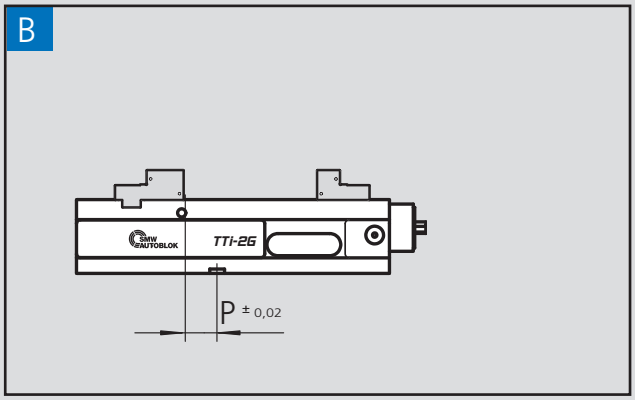

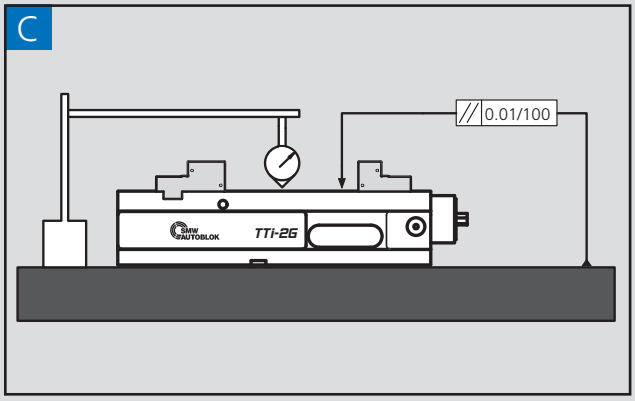

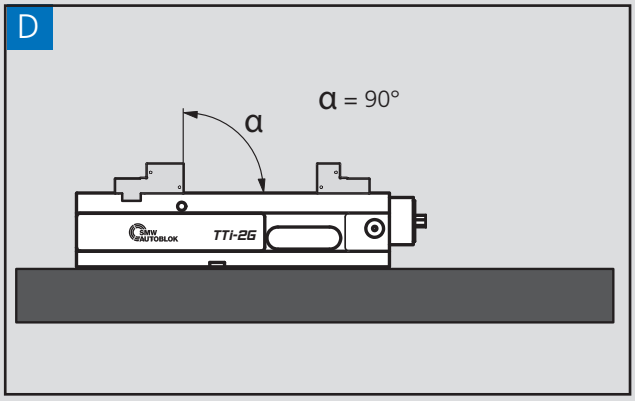

6

Smooth clamping jaw hardened and grinded

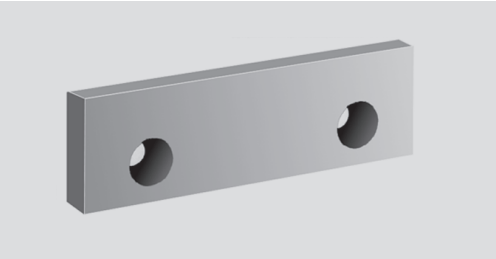

Type	Id. No.	Height [mm]	Depth [mm]
TTi-2G 90	462738	34	10
TTi-2G 125	462739	39.2	12
TTi-2G 160	462740	49.2	16

Consisting of:
1 piece clamping jaw

Smooth clamping jaw soft (Material 1.2842)

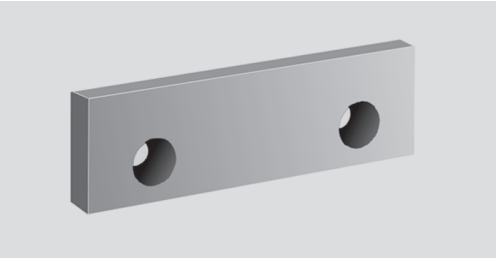

Type	Id. No.	Height [mm]	Depth [mm]
TTi-2G 90	462741	34	12
TTi-2G 125	462742	39.2	12
TTi-2G 160	462743	49.2	16

Consisting of:
1 piece clamping jaw

Clamping jaw with transverse rib

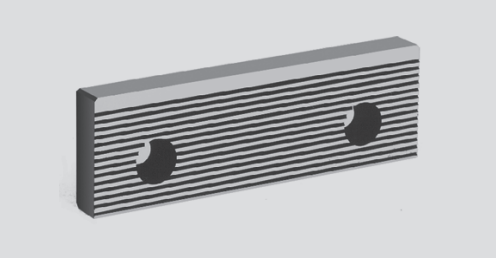

Type	Id. No.	Height [mm]	Depth [mm]
TTi-2G 90	462744	34	10
TTi-2G 125	462745	39.2	12
TTi-2G 160	462746	49.2	16

Consisting of:
1 piece clamping jaw

Level bar with quick change fixing

Type	Id. No.	Height [mm]	Depth [mm]
TTi-2G 90	462747	13	3
TTi-2G 90	462748	22	3
TTi-2G 125	462749	39	3
TTi-2G 125	462750	35	3
TTi-2G 125	462751	15	3
TTi-2G 160	462752	14	3
TTi-2G 160	462753	30	3
TTi-2G 160	462754	44	3

Consisting of:
1 piece level bar

SinterGrip clamping jaw

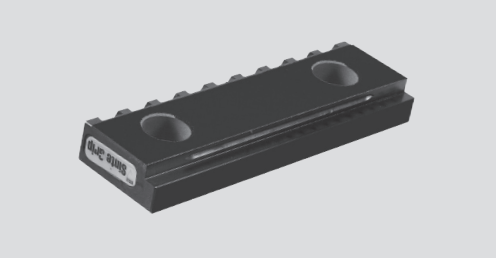

Type	Id. No.	Qty. Sinter-Grip per jaw	Height [mm]	Depth [mm]
TTi-2G 125	462755	9	39.5	12
TTi-2G 160	462756	11	49.8	12

Consisting of:
1 set = 2 pieces; SinterGrip clamping jaw (without clamping inserts)

SinterGrip
Page 302

Smooth clamping jaw hardened and grinded

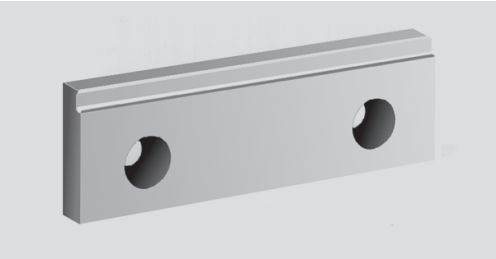

Type	Id. No.	Step [mm]	Height [mm]	Depth [mm]
TTi-2G 125	462757	3 x 6	39.2	12
TTi-2G 125	462758	5 x 10	39.2	12
TTi-2G 160	462759	5 x 8	49.2	16

Consisting of:
1 piece clamping jaw

Grip bar suitable for smooth clamping jaws TTi-2G 125

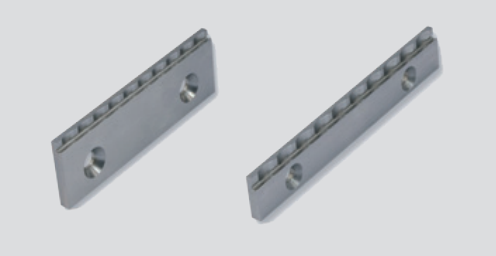

Type	Id. No.	Model	Height [mm]	Step [mm]
TTi-2G 125	462760	High	39.5	1.4 x 4.5
TTi-2G 125	462761	Step	19.5	2 x 4.5

Consisting of:
2 pieces grip bar (1 set)

Clamping jaw with fluting

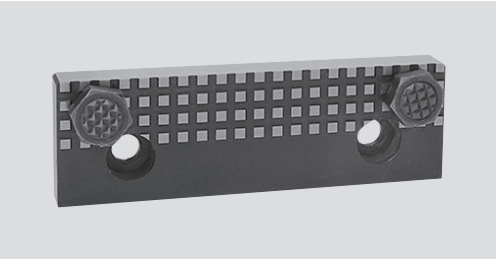

Type	Id. No.	Height [mm]	Depth [mm]	Thread	Id. No. Grippers
TTi-2G 90	462762	34	12	M10	462696
TTi-2G 125	462763	40	12	M10	462696
TTi-2G 160	462764	50	16	M12	462697

Consisting of:
1 piece clamping jaw

Prismatic jaw horizontal and vertical prisma 90°, hardened and grinded

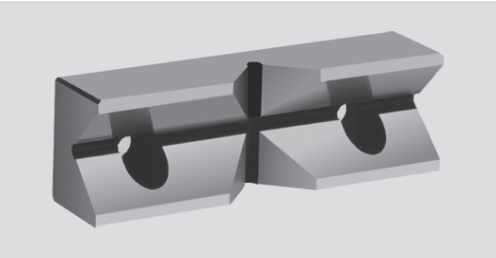

Type	Id. No.	Height [mm]	Depth [mm]	Clamping width in mm	
				1 jaw	2 jaws
TTi-2G 90	462765	36	17	Ø 12-14	Ø 18-42
TTi-2G 125	462766	39.2	28	Ø 15-42	Ø 24-42
TTi-2G 160	462767	49.2	32	Ø 18-50	Ø 28-50

Consisting of:
1 piece clamping jaw

Pull-down jaw with interchangable insert

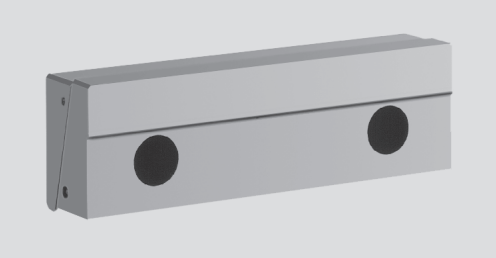

Type	Id. No.	Height [mm]	Depth [mm]
TTi-2G 90	462768	34	24
TTi-2G 125	462769	39.2	25
TTi-2G 160	462770	49.2	28

Consisting of:
1 piece clamping jaw

Pull-down jaw for raw parts with spring blade

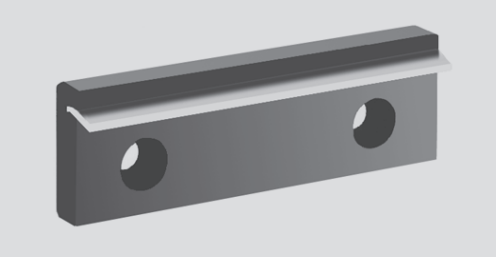

Type	Id. No.	Height [mm]	Depth [mm]
TTi-2G 90	462771	34	18
TTi-2G 125	462772	40	21
TTi-2G 160	462773	50	24

Consisting of:
1 piece clamping jaw

Multi-jaw for grip inserts, pendulum jaws and workstop elements

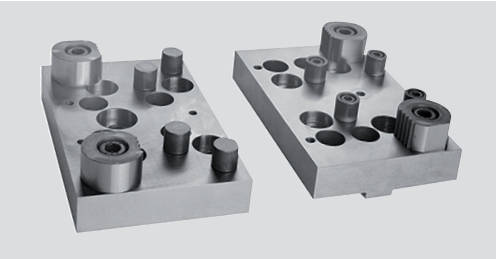

Type	Id. No. Fix jaw	Id. No. Mobil jaw	Id. No. Gripper	Width [mm]	Length [mm]	Height [mm]
TTi-2G 90	462774	462786	462789	90	145	25
TTi-2G 125	462775	462787	462789	105	170	25
TTi-2G 160	462776	462788	462790	115	200	25

Consisting of:
1 piece clamping jaw

Pendulum jaw suitable for multi-jaw (moveable jaw)

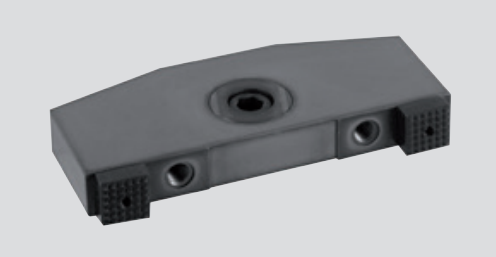

Type	Id. No.	Width [mm]	Length [mm]	Height [mm]
TTi-2G 90	462777	50	141	20
TTi-2G 125	462778	65	156	20
TTi-2G 160	462779	76	196	23

Consisting of:
1 piece clamping jaw

Angle drive for TTi-2G NC clamping vises

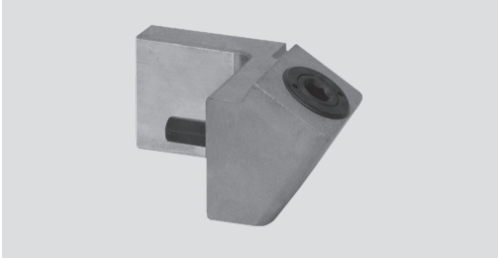

Type	Id. No.	Length [mm]	SW
TTi-2G 90	462780	12	SW 12
TTi-2G 125	462781	33	SW 14
TTi-2G 160	462782	49	SW 14

Consisting of:
1 piece angle drive

Hand crank standard version for TTi-2G NC clamping vises

Type	Id. No.	Length [mm]	SW
TTi-2G 90	462783	160	SW 12
TTi-2G 125	462784	160	SW 14
TTi-2G 160	462785	160	SW 14

Consisting of:
1 piece hand crank

T-nuts with screws

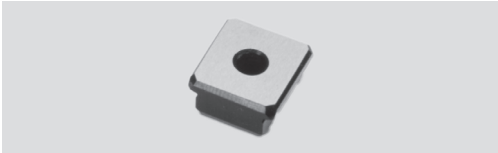

Consisting of:
1 t-nut incl. screw

Type	Id. No.					
	20x12 mm	20x14 mm	20x16 mm	20x18 mm	20x20 mm	20x22 mm
TTi-2G	465118	465119	465120	465121	465122	465123

SinterGrip – Lowest clamping depth without pre-marking

Thanks to the **SinterGrip clamping inserts**, it is possible to clamp workpieces safe with a clamping depth of just 3.5 mm, so the workpiece can be completely machined in a single operation. This reduces the cost of materials, particularly where raw material costs considerably influence the piece price. **SinterGrip** also optimizes the performance of the machine and tools: Faster cutting and feeding speeds mean larger cutting volumes and shorter machining times for each workpiece.

In addition, production steps required until now, such as workpiece pre-marking, are no longer necessary. Eliminating the pre-marking process reduces investment costs and saves on upstream processing costs. Considerable time is also saved as the workpiece can be clamped immediately by eliminating upstream processes.

The triangular insert with pyramidal teeth penetrates into the material, creating a positive fit between the clamp and the workpiece. The forces and vibrations generated during machining are evenly distributed and absorbed.

SinterGrip comes in 3 different versions for different materials: Steel, hardened steel (up to 54 HRC) / titanium and aluminium / plastic. **SinterGrip** is compatible with all commonly available types of vises and clamping devices.

SinterGrip clamping inserts

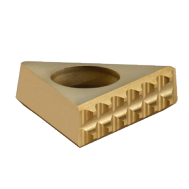

Page 300

SinterGrip

Clamping inserts

- Low clamping depth of only 3.5 mm
- No pre-marking necessary
- Highest stability and active vibration absorption
- Increase of the cutting forces compared to other systems

SinterGrip
Clamping inserts

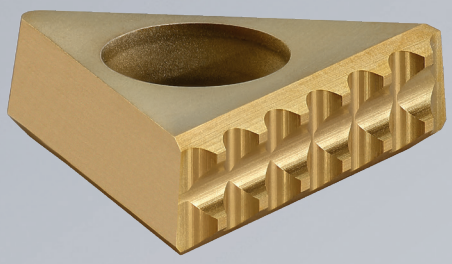

SinterGrip
clamping insert

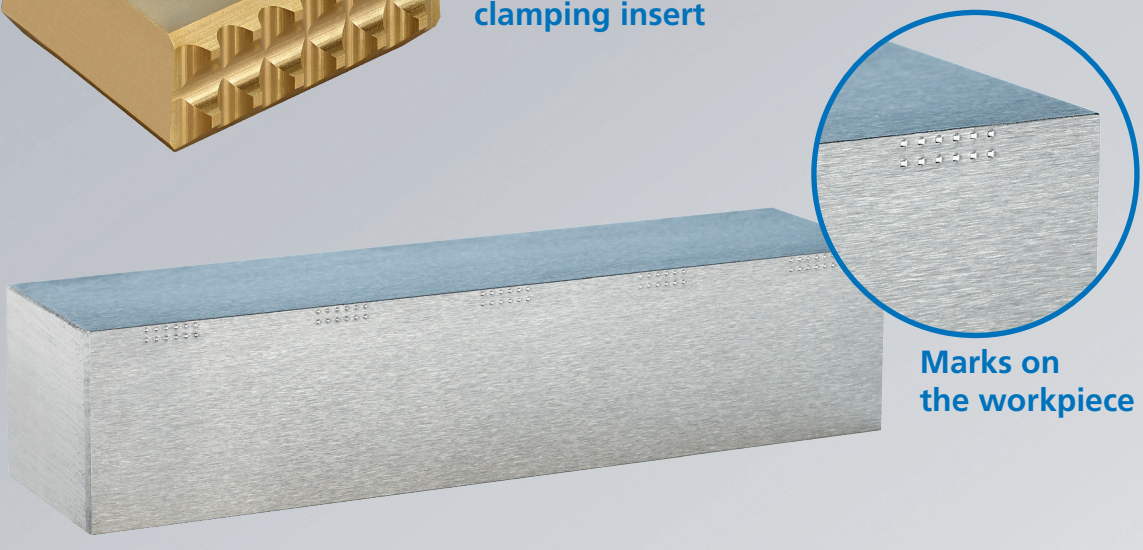

Marks on
the workpiece

Comparison clamping depths

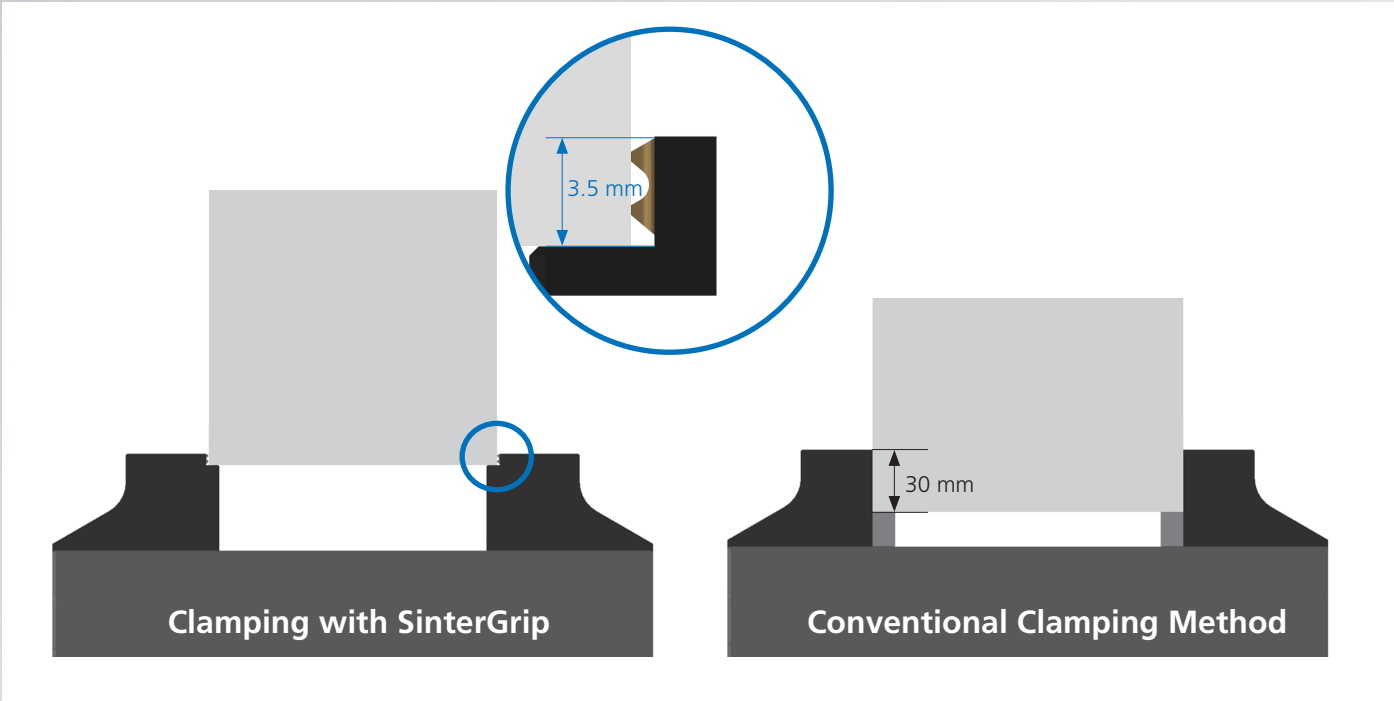

▶ Lowest clamping depth of workpieces – no pre-marking

Benefits

1

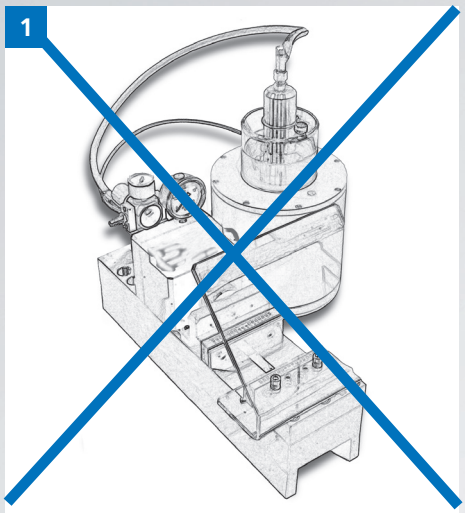

No pre-marking necessary

→ Elimination of the costs for a pre-mark machine and set-up times

2

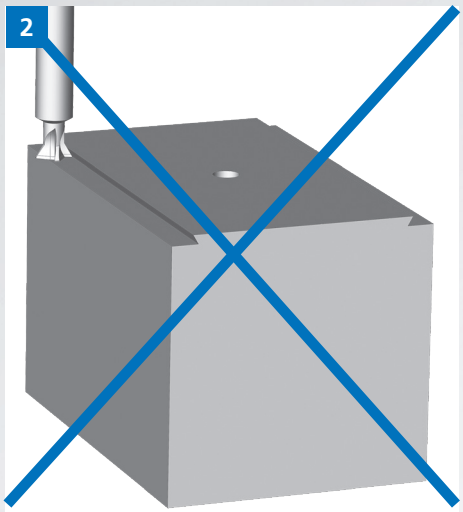

No pre-machining of the workpiece or clamping surfaces necessary

→ Elimination of the costs for the pre-machining

3

3 different versions for all materials:

→ Steel

→ Hardened steel | Titanium (up to 54 HRC)

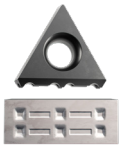

→ Aluminum | Plastic

4

Best accessibility and highest holding forces

→ Safe clamping of workpieces
→ Ideal for 5-axis machining
→ High material saving due to low clamping depth of only 3.5 mm

5

Maximum lifetime | No wear costs

→ SinterGrip clamping inserts are made from coated carbide steel and have maximum lifetime
→ The inserts are individually exchangeable

6

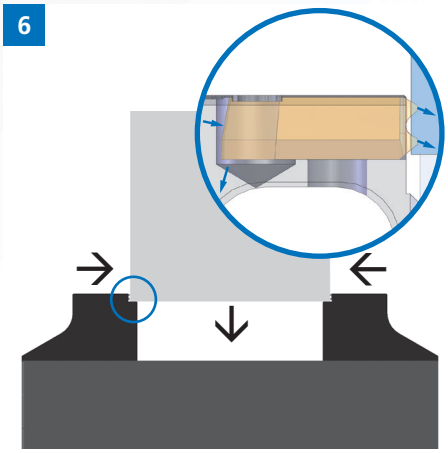

Pull-down effect | Active vibration absorption

→ Even distribution of the clamping forces and active vibration absorption
→ Form-fitting clamping by means of the SinterGrip inserts

SinterGrip

Clamping inserts

- Low clamping depth
- High stability and active vibration absorption

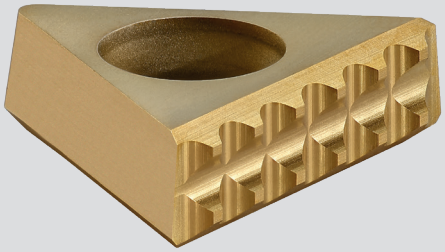

Application/customer benefits

- Very low clamping depth (only 3.5 mm) ensures safe clamping of the workpieces: Highest efficiency and productivity resulting in lower material costs and less machining costs
- No pre-marking necessary: Eliminates costs for a pre-mark machine and set-up times
- Highest stability and active vibration absorption
- Pull-down effect due to the special row of the teeth
- Increases cutting speeds compared to other systems
- Simple manufacturing of jaws for SinterGrip inserts by the customer
- Maximum lifetime

Technical features

- Clamping depth only 3.5 mm
- 3 different versions for steel, hardened steel / titanium (up to 54 HRC) and aluminum / plastic
- Made from coated carbide steel

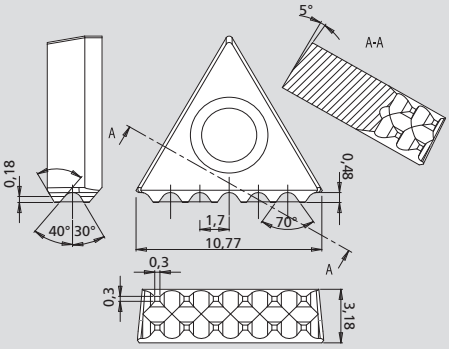

SinterGrip STD

Clamping insert for steel

Id. No. 58450119

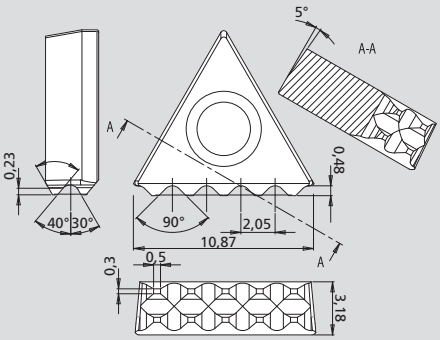

SinterGrip HRC

Clamping insert for hardened steel and titanium until 54 HRC

Id. No. 58450129

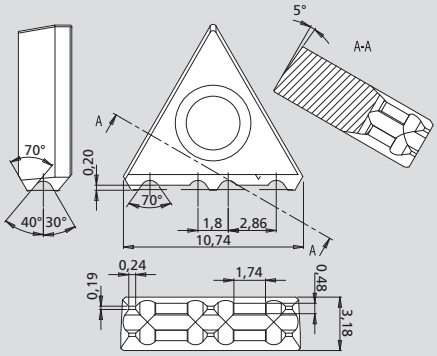

SinterGrip ALU

Clamping insert for aluminum and plastic

Id. No. 58450139

Order review

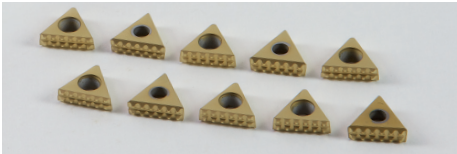

Type	Id. No.
SinterGrip STD	58450119

Consisting of 10 pcs. clamping inserts
(without bolts; Order no. SinterGrip bolt-set 58450219)

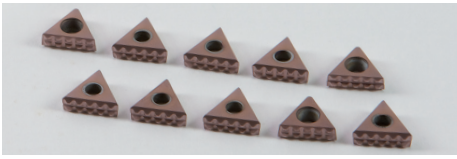

Type	Id. No.
SinterGrip HRC	58450129

Consisting of 10 pcs. clamping inserts
(without bolts; Order no. SinterGrip bolt-set 58450219)

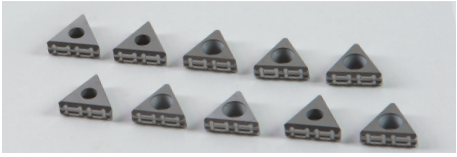

Type	Id. No.
SinterGrip ALU	58450139

Consisting of 10 pcs. clamping inserts
(without bolts; Order no. SinterGrip bolt-set 58450219)

SinterGrip Bolt set, consisting of 10 pieces

Type	Id. No.
SinterGrip	58450219

Key T9

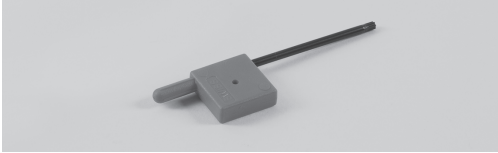

Type	Id. No.
SinterGrip	58450320

Protection cover aluminum set, consisting of 10 pieces

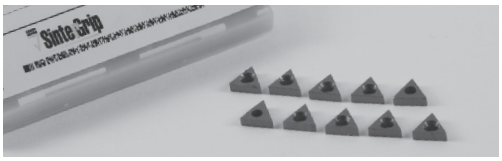

Type	Id. No.
SinterGrip	58450519

Pair of jaws, set (incl. 1 pair parallels, wrench torx T9, screws)

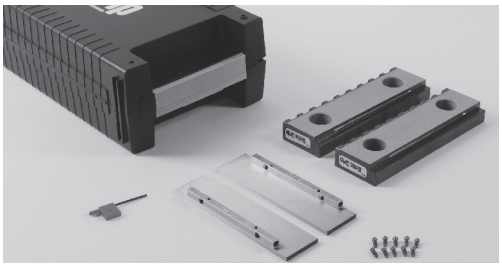

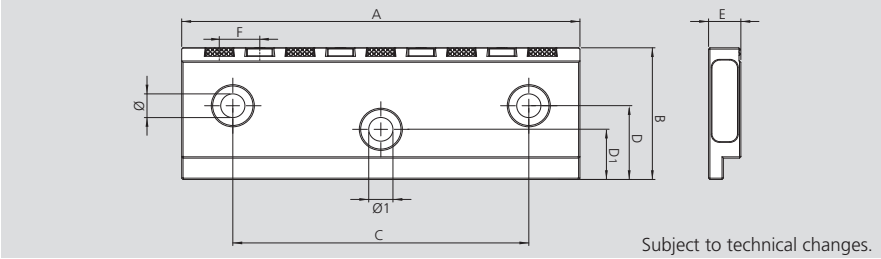

Subject to technical changes.

Type	Id. No. Version 1	Id. No. Version 2	A mm	B mm	C mm	D mm	D1 mm	E mm	Ø mm	Ø1 mm	H parall. mm	F mm
ALLMATIC-T-REX/TITAN	58451119	58452119	124.4	39.5	88	12.3	18	12	7	11	36.5	14
GRESSEL/WNT/SCHUNK	58451129	58452129	125	40	80	15	-	12	9	-	36.5	14
HILMA	58451149	58452149	125	45	80	14	-	12	9	-	42	14
KURT 6"	58451229	58452229	152	44.1	98.4	23.6	-	18.4	11	-	41	15.875
ALLMATIC-T-REX/TITAN	58451319	58452319	160	49.8	88	12.3	20	12	7	11	47	14
GRESSEL/WNT/SCHUNK	58451329	58452329	160	50	100	20	-	12	11	-	47	14
HILMA	58451349	58452349	160	54	100	17	-	12	11	-	51	14

Version 1: without wolfram-carbide coating
Version 2: with wolfram-carbide coating
for a better grip in the 2nd operation (picture)

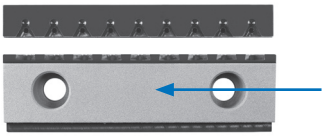

Number of the needed SinterGrip clamping inserts:
Id. No. 58451119 to 58452229: 9 pcs. SinterGrip clamping inserts
Id. No. 58451319 to 58452349: 11 pcs. SinterGrip clamping inserts

Starter Kit (for the preparation by the customer, tutorial see next page)

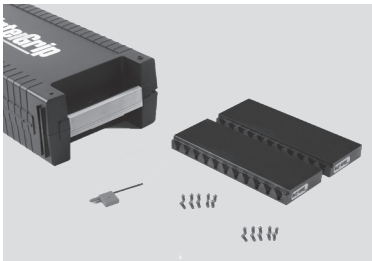

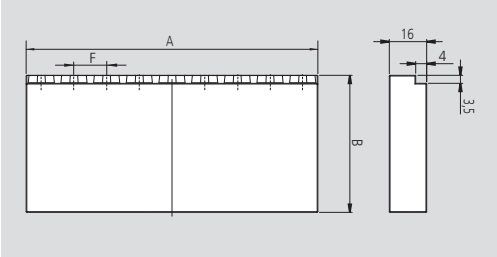

Type	Id. No.	A mm	B mm	F mm	Inserts
Starter Kit	58453119	125	59	14	9
Starter Kit	58453319	160	59	14	11
Starter Kit	58453419	200	70	15	13

Consisting of:
1 pair of jaws,
1 wrench TORX T9 and 1 kit of 10 screws

SinterGrip

Manufacturing of jaws for SinterGrip inserts by the customer

- Milling cutter for SinterGrip clamping inserts
- Manual

SinterGrip milling cutting tool

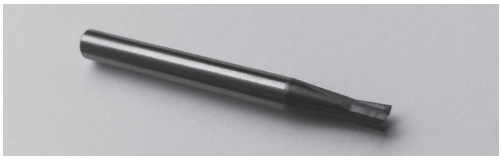

Type	Id. No.
SinterGrip milling cutter	58450410

Solid carbide end milling cutting tool, Ø 4 mm, 3 cutting edges, Ø 3x5°, V = 40-60 m/min, Fz = 0.01-0.04 mm/tooth.

Drawing for the pocket to include SinterGrip clamping inserts:
Recommended cutting parameters:
Cutting speed V = 80-120 m/min
Feed force per tooth FZ = 0.02 mm

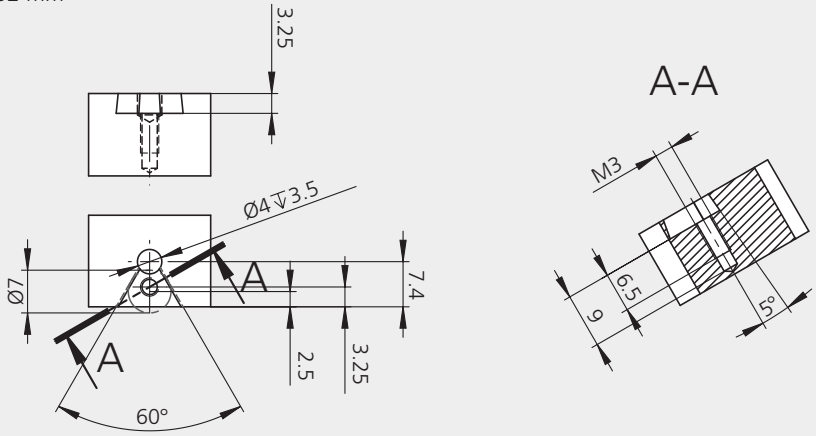

Subject to technical changes.

Tutorial for the preparation of jaws for SinterGrip inserts by the customer

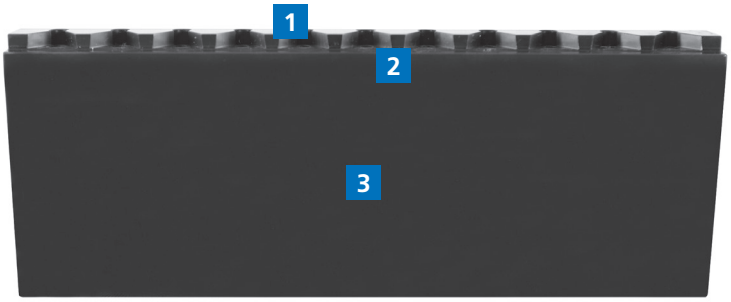

1. Shape of the SinterGrip pocket manufactured with SinterGrip milling cutting tool (Id. No. 58450410)
2. Clamping step 3.5 x 4 mm
3. Jaw made from nitrided steel with a tensile strength of ≈ 980N/mm²

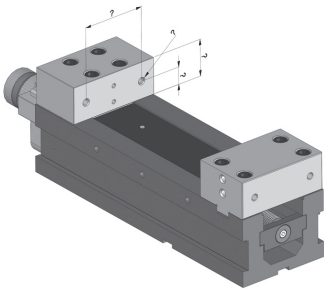

Measurement of the dimensions of the vise

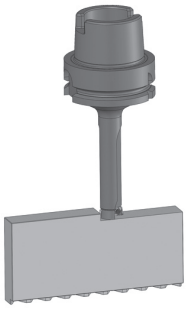

Milling of the jaw to the required height

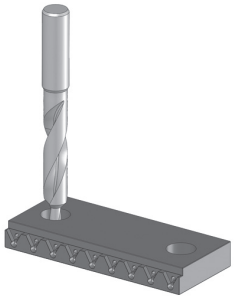

Drilling of the jaw with the correct distance of the holes

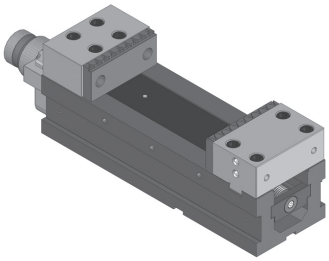

Mounting of the jaw on the vise

SinterGrip

- Multi jaw for the use of SinterGrip clamping inserts on machine vises
- Form-fitting clamping of components without pre-processing

Multi jaw SinterGrip

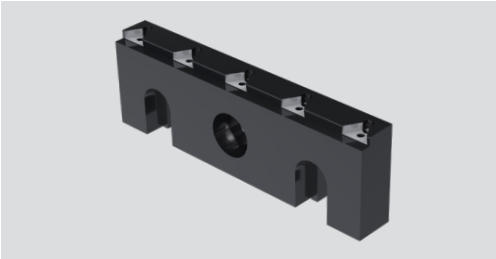

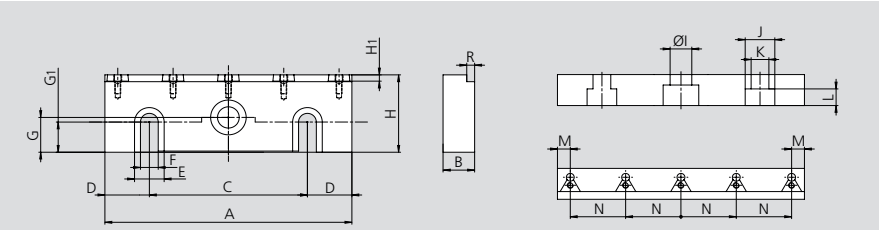

Subject to technical changes.

SMW-AUTOBLOK Type		Multi jaw SinterGrip 467112
A	mm	125
B	mm	18
C	mm	80
D	mm	22.5
E	mm	15
F	mm	9
G	mm	18
G1	mm	15.6
H	mm	40
H1	mm	3.25
I	mm	11
J	mm	15
K	mm	9
L	mm	8.6
M	mm	6.5
N	mm	28

Multi jaw compatible with SMW-AUTOBLOK TTI-2G 125, Gressel gripos 125, WNT NCG 125, Schunk KSC 125, Allmatic NC8 125, TC/LC 125, Hoffmann HiPo Clamp 125, Garant NC high pressure vise version LC, KESEL NCA 125, CNC125, Röhm RKE 125

Consisting of: Multi jaw SinterGrip, without SinterGrip clamping inserts, without SinterGrip bolts

Manual chucks from SMW-AUTOBLOK

3-jaw manual chucks are particularly suitable for clamping workpieces in machining centres. The **HG-N**, **HG-NB** and **HG-2G / HG-B-2G** manual chucks feature a built-in quick jaw change system as standard and are available with diameters ranging from 160 to 1000 mm. The quick jaw change system significantly reduces set-up times. The wedge bar design guarantees the highest precision and accuracy.

The **new generation HG-2G / HG-B-2G** is mechanically sealed and low-maintenance. The sealing protects the guideways and inside of the chuck against dirt. The HG-2G / HG-B-2G's optimized innovative lubrication system guarantees a constant clamping force and reduces maintenance intervals. The HG-2G manual chucks are available in sizes ranging from 400 to 1000 mm (additional sizes available on request).

PTF 4-jaw faceplates are suitable for clamping round, square or irregular workpieces. Each individual jaw can be set radially by hand. Clamping forces can be increased many times over through the use of a torque multiplier. The PTF faceplates are also sealed and therefore resistant to dirt. PTF faceplates are available with diameters ranging from 1000 to 2000 mm.

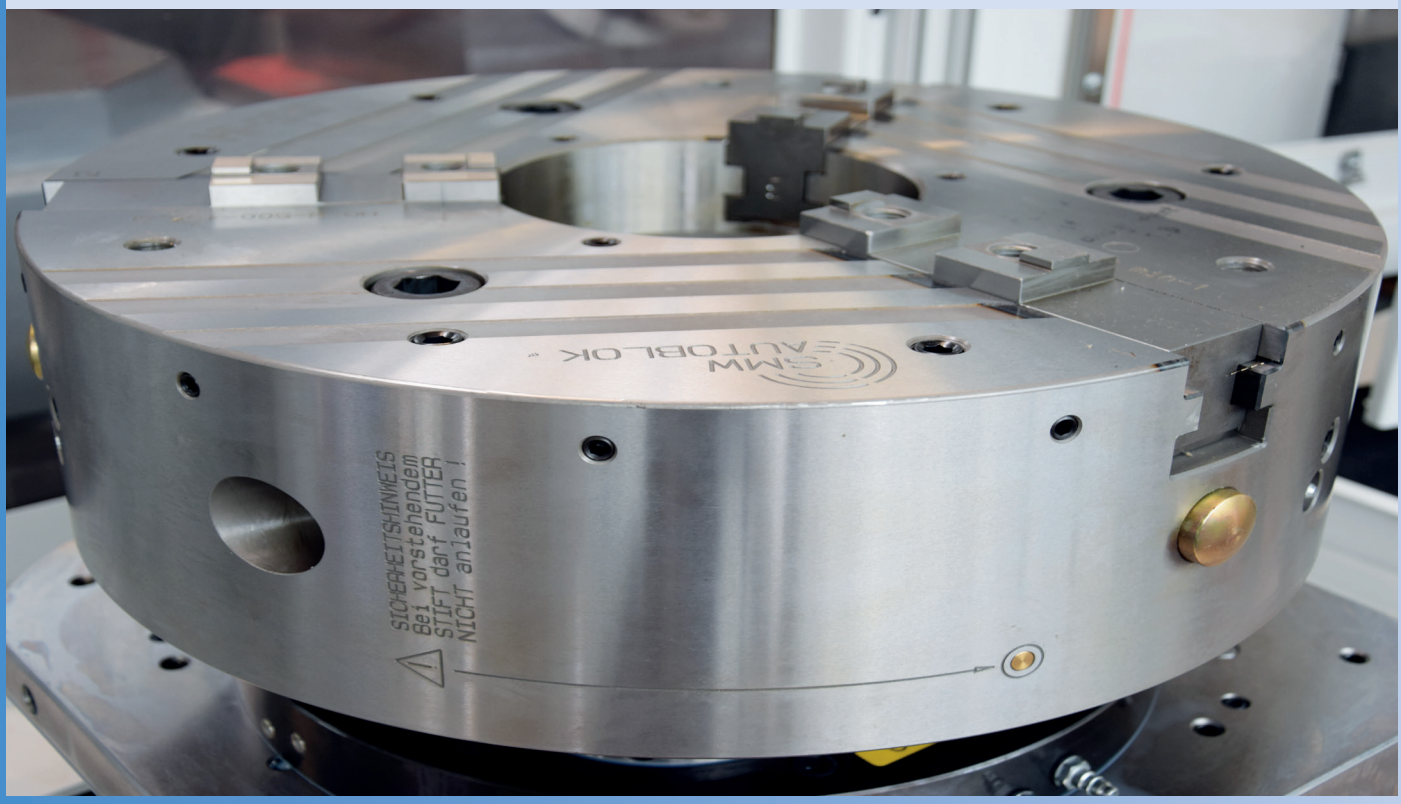

Manual Chucks

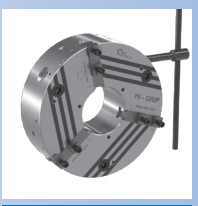

Page 308

HG-N
TONGUE & GROOVE
Jaw system original SMW

Manual chucks Ø 160 - 630 mm

- With through-hole – Quick jaw change
- 3 jaws

Page 314

HG-N Flange
Chuck flange for stationary mounting

- Chuck flange for mounting an SMW manual - chuck HG on machining centers, milling and and drilling machines
- Including drain grooves for an oriented drainage of coolant and dirt
- Usable with HG-N / HG-F / HG-2G

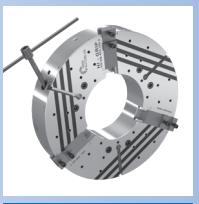

Page 316

HG-NB
TONGUE & GROOVE

Manual chucks Ø 800 - 1000 mm

- With extra large through-hole – Quick jaw change
- All existing top jaws can be used
- 3 jaws

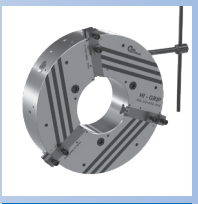

Page 320

HG-2G
TONGUE & GROOVE

Manual chucks Ø 315 - 630 mm

- With through-hole – Quick jaw change
- 3 jaws
- Lubrication channels in the jaw guide ways
- Mechanic sealed – low maintenance

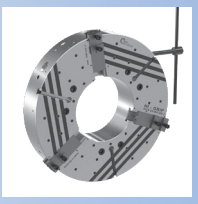

Page 326

HG-B-2G
TONGUE & GROOVE

Manual chucks Ø 800 - 1000 mm

- With extra large through-hole – Quick jaw change
- All existing top jaws can be used
- 3 jaws
- Mechanic sealed – low maintenance

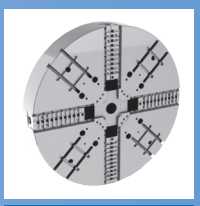

Page 330

PTF
TONGUE & GROOVE
Manual clamping and radial setting of jaws

High precision 4 jaws independent manual chucks Ø 530 - 2000 mm

- Closed center
- 4 jaws

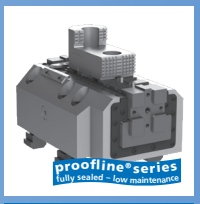

Page 332

JBX
Manual jaw box
Standard mounting dimensions

JBX-2G
Manual jaw box with semi-finished body

High precision, resistance and power manual jaw box

- Accessory for face plates, 4 jaws independent manual or chucks
- Internal or external clamping

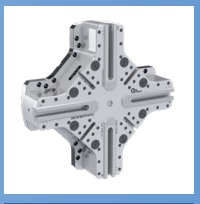

Page 336

Centco4-MLW
INCH
SERRATION

4-jaw chuck Ø 315 - 1400 mm

- Independent self centering clamping in 2 axis
- Weight-optimized chuck body
- 4 jaws

Quick jaw change

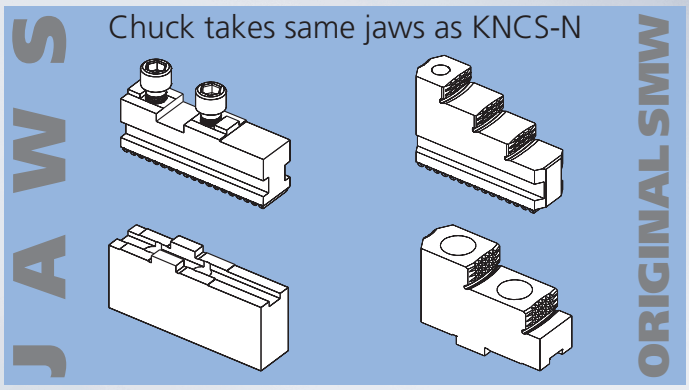

HG-N

- Jaw change in less than 1 minute

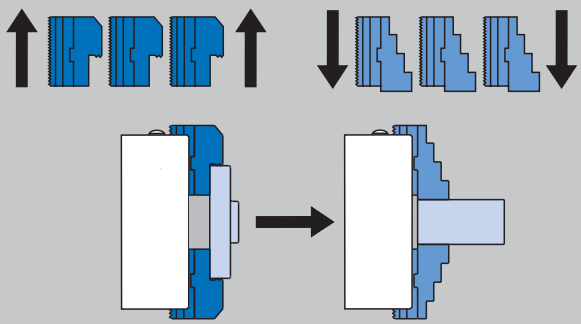

- Universal, because jaws can be radially adjusted and reversed = less jaw sets

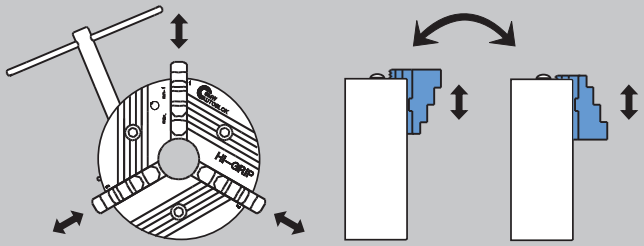

Jaws radially adjustable Jaws 180° reversed

Flat gripping force curve for highest speeds

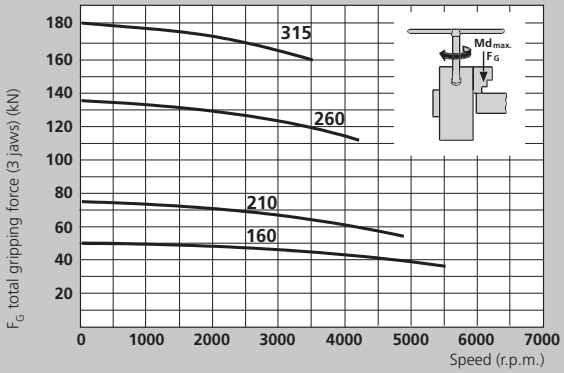

- The max. gripping force is the total, acting on the 3 jaws, obtained by applying to the chuck the max. allowed driving torque. The data refers to a chuck newly maintained accordingly to their service manual, using SMW K05 grease.

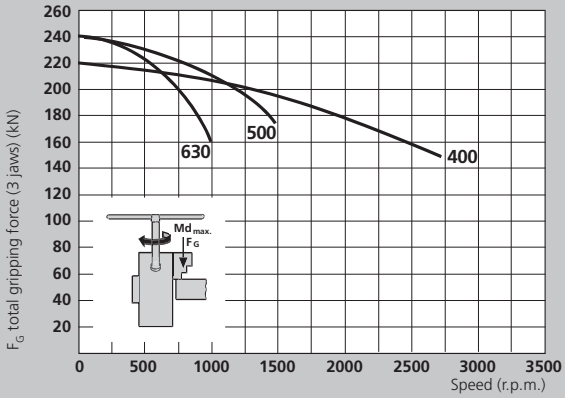

- The dynamic gripping forces have been measured using hardened standard stepped monoblock jaws type GST placed in a position not exceeding the outer diameter of the chuck.

⚠ **Safety advice / danger of damage:**
When using taller / havier jaws and / or clamping on a more external position reduce driving torque / rotating speed accordingly.

manual chuck HI-GRIP®

Direct mounting

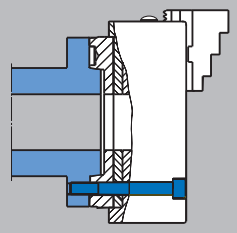

Recess and bolt circle to DIN 55026 / ISO-A 702/1

- No reboring of already machined jaws necessary, because of runout < 0.02 (e.g. HG-N 210)

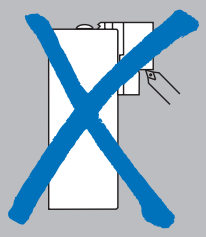

Wedge bar design guarantees highest precision, concentricity and repeatability as well as highest gripping forces

Safety jaw release with interlock

Jaw system SMW

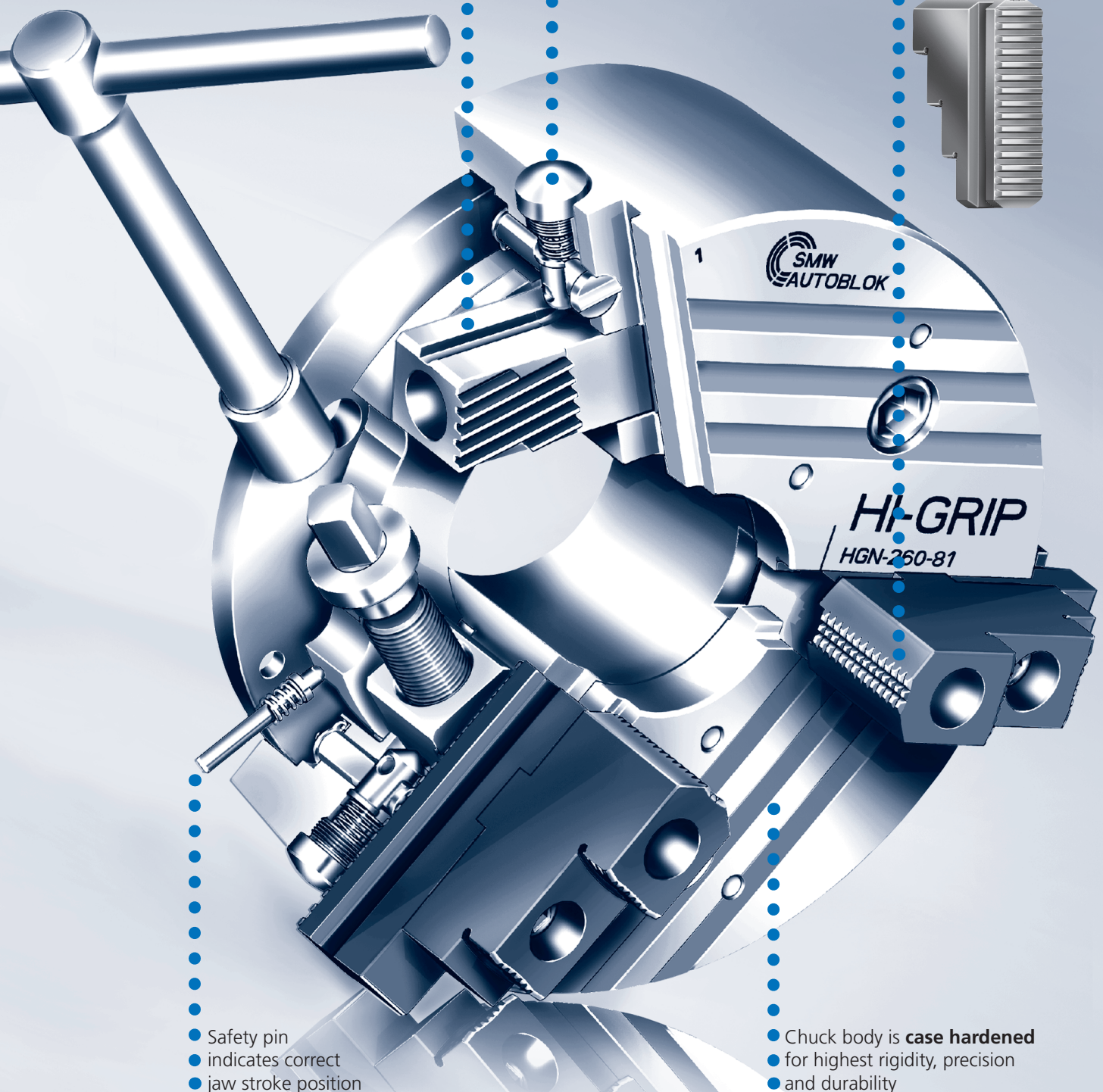

Safety pin indicates correct jaw stroke position

Chuck body is **case hardened** for highest rigidity, precision and durability

HG-N

QUICK JAW CHANGE
Jaw system original SMW

Manual chuck

■ Main dimensions and technical data

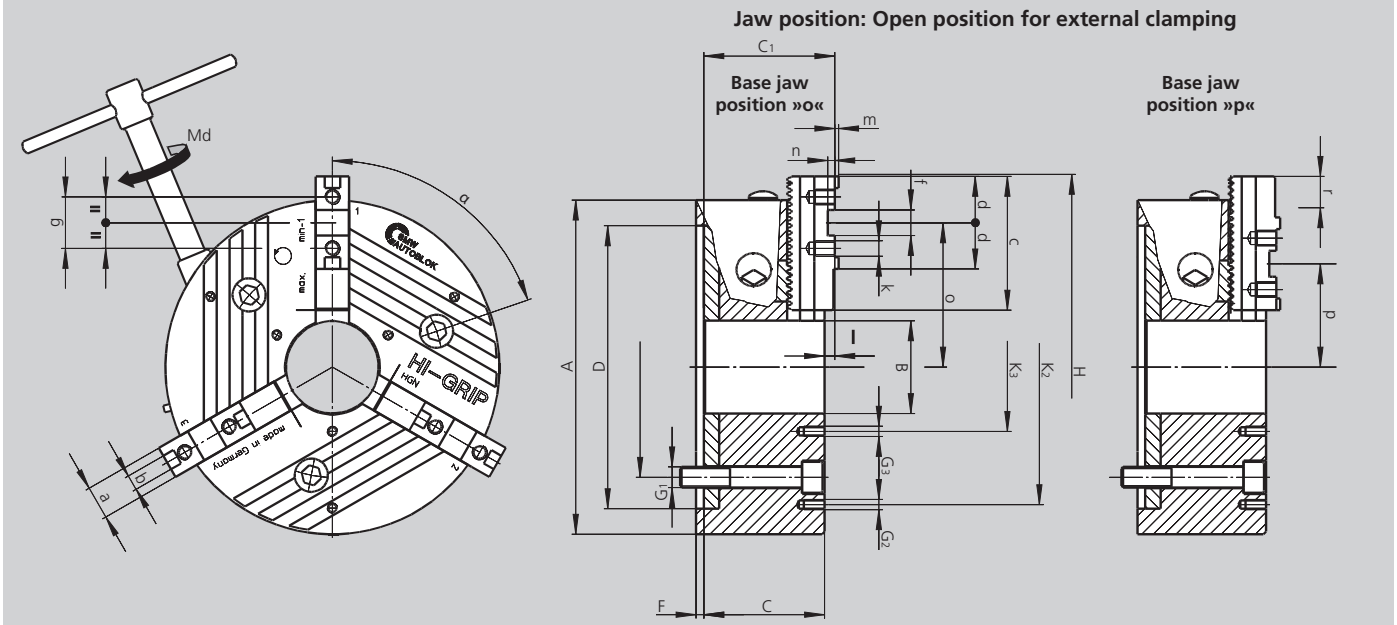

Subject to technical changes.
For more detailed information please ask our customer service.

SMW-AUTOBLOK Type		HG-N 160-46	HG-N 210-60	HG-N 260-81	HG-N 315-102	HG-N 400-128	HG-N 500-165	HG-N 630-254
Mounting	**Size**	**Z140**	**Z170**	**Z220**	**Z300**	**Z380**	**Z380**	**Z380**
	A	165	210	260	315	400	500	630
	B	46	60	81	102	128	165	254
	C	64	85.5	93.7	110.8	125	136	143
	C1	71	90.4	102	120.1	134.3	146	153
H6	**D**	140	170	220	300	380	380	380
	E	104.8	133.4	171.4	235	330.2	330.2	330.2
	F	5	6	6	6	6	8	8
	G1	M10	M12	M16	M20	M24	M24	M24
	G2	-	M10 / 3 x 120°	M10 / 3 x 120°	M10 / 3 x 120°	M12 / 3 x 120°	M16 / 9 x 40°	M16 / 6 x 60°
	G3	M5 / 3 x 120°	M6 / 3 x 120°	M8 / 3 x 120°	M10 / 3 x 120°	M12 / 3 x 120°	M12 / 3 x 120°	M12 / 3 x 120°
Swing dia.	**H**	194	244	300	358	426	530	685
	K2	-	168	210	268	330	420	550
	K3	75	75	95	120	152	195	290
	α	76°	74°	71°	71°	71°	71°	74°
	β	-	60°	60°	60°	60°	20°	30°
Master jaw		GBK 160	GBK 200	GBK 250	GBK 315	GBK 400	GBK 500	GBK 630
	a	20	22	26	32	32	45	45
f7	**b**	8	10	12	12	12	18	18
	c	65	85	104	115	125	160	200
	d	28	33	36	36	43	50	50
H7	**f**	18	20	20	20 (26)	26	30	30
	g	32	40	40	40 (54)	54	60	60
Thread / thread depth	**k**	M8 / 12	M8 / 13	M12 / 15	M12 / 17	M12 / 17	M16 / 34	M16 / 34
	l	6	4.9	8.3	9.3	9.3	10	10
	m	2.5	2.5	3	3	3	4	4
	n	5	4.5	5.5	6	7	9	9
Max. / min.	**o**	68.5 / 49.5	88 / 64.5	112.4 / 79.4	141.3 / 102.8	168.8 / 113.8	211 / 141	291.5 / 200.5
Max. / min.	**p**	59.3 / 40.5	69 / 45.5	80.6 / 47.6	98.3 / 59.8	129.8 / 74.8	150 / 80	191.5 / 100.5
Base jaw tooth pitch	**-**	4.7	4.7	5.5	5.5	5.5	7	7
Master jaw offset	**r**	18.8	23.5	33	38.5	55	70	91
Master jaw offset	teeth	4	5	6	7	10	10	13
Usable jaw stroke	mm	5.9	6.4	7.4	9.6	11.4	11.5	13
Max. total gripping force	kN	60	75	130	180	220	250	250
At max. torque Md	Nm	80	120	160	200	250	260	260
Speed	r.p.m.	5500	4800	4200	3500	2700	1500	1000
Weight without jaws	kg	8.3	19	32	53	103	161	270
Moment of inertia	kg·m²	0.03	0.09	0.25	0.60	1.9	4.5	12

Chuck with center mounting DIN 6350

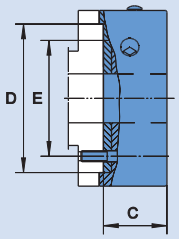

Chuck	HG-N 160-46	HG-N 210-60	HG-N 260-81	HG-N 315-102	HG-N 400-128	HG-N 500-165	HG-N 630-254
Mounting	Z140	Z170	Z220	Z300	Z380	Z380	Z380
C	81	85.5	94	111	125	136	136
D	140	170	220	300	380	380	380
E	104.8	133.4	171.4	235	330.2	330.2	330.2
Chuck with GBK + WAK							
Id. No.	089310	089538	089550	089562	089574	089584	089708
Chuck with GST							
Id. No.	089312	089313	089317	089321	089325	089328	089709
Chuck with GBK + GUA							
Id. No.	089331	089539	089551	089563	089575	089585	089710

Chuck with ISO-A mounting DIN 55026

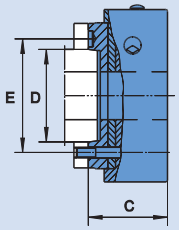

Chuck	HG-N 160-46		HG-N 210-60			HG-N 260-81		HG-N 315-102		HG-N 400-128		HG-N 500-165		HG-N 630-254	
Mounting	A4	A5	A5	A6	A8	A6	A8	A8	A11	A11	A15	A11	A15	A11	A15
C	101	101	109.5	107.5	125.5	118	119	141	141	165	161	176	172	176	172
D	63.52	82.57	82.57	106.39	139.73	106.39	139.73	139.73	196.88	196.88	285.77	196.88	285.77	196.88	285.77
E	82.6	104.8	104.8	133.4	171.4	133.4	171.4	171.4	235.0	235.0	330.2	235.0	330.2	235.0	330.2
Chuck with GBK + WAK															
Id. No.	089332	089342	090458	089540	089542	089552	089554	089564	089566	089576	089578	089586	089588	089711	089713
Chuck with GST															
Id. No.	089962	089346	090459	089314	089315	089318	089319	089322	089323	089326	089327	089329	089330	089715	089732
Chuck with GBK + GUA															
Id. No.	089427	089434	090460	089541	089543	089553	089555	089565	089567	089577	089579	089587	089589	089749	089760

Chuck with bayonet mounting DIN 55027 Type C

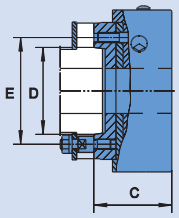

Chuck	HG-N 160-46		HG-N 210-60			HG-N 260-81		HG-N 315-102		HG-N 400-128		HG-N 500-165		HG-N 630-254	
Mounting	C4	C5	C5	C6	C8	C6	C8	C8	C11	C11	C15	C11	C15	C11	C15
C	101	101	107.5	107.5	125.5	119	119	141	141	161	161	172	172	172	172
D	63.52	82.57	82.57	106.39	139.73	106.39	139.73	139.73	196.88	196.88	285.77	196.88	285.77	196.88	285.77
E	85	104.8	104.8	133.4	171.4	133.4	171.4	171.4	235.0	235.0	330.2	235.0	330.2	235.0	330.2
Chuck with GBK + WAK															
Id. No.	089464	089487	090461	089544	089546	089556	089558	089568	089570	089580	089582	089590	089592	089761	089762
Chuck with GST															
Id. No.	089488	089489	090462	089478	089479	089480	089476	089481	089482	089483	089484	089485	089486	089765	089766
Chuck with GBK + GUA															
Id. No.	089518	089519	090463	089545	089547	089557	089559	089569	089571	089581	089583	089591	089593	089786	089802

Chuck with Camlock mounting DIN 55029 Type S

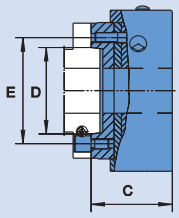

Chuck	HG-N 160-46		HG-N 210-60			HG-N 260-81		HG-N 315-102		HG-N 400-128		HG-N 500-165		HG-N 630-254	
Mounting	S4	S5	S5	S6	S8	S6	S8	S8	S11	S11	S15	S11	S15	S11	S15
C	109	109	118.5	118.5	125.5	132	132	154	154	175	175	186	186	186	186
D	63.52	82.57	82.57	106.39	139.73	106.39	139.73	139.73	196.88	196.88	285.77	196.88	285.77	196.88	285.77
E	82.6	104.8	104.8	133.4	171.4	133.4	171.4	171.4	235.0	235.0	330.2	235.0	330.2	235.0	330.2
Chuck with GBK + WAK															
Id. No.	089520	089528	090464	089901	089905	089909	089913	089917	089921	089925	089929	089933	089937	089803	089832
Chuck with GST															
Id. No.	089602	089663	089996	089899	089903	089907	089911	089915	089919	089923	089927	089931	089935	089843	089897
Chuck with GBK + GUA															
Id. No.	089668	089674	090466	089902	089906	089910	089914	089918	089922	089926	089930	089934	089938	089942	089955

Parts included: Fixing elements (screws resp. studs resp. camlock bolts).

HG-N

QUICK JAW CHANGE

■ Jaws

GBK
Hardened base jaws

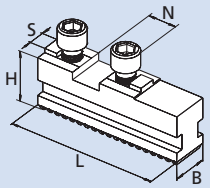

Chuck	HG-N 160	HG-N 210	HG-N 260	HG-N 315	HG-N 400	HG-N 500	HG-N 630
Jaw type	GBK 160	GBK 200	GBK 250	GBK 315	GBK 400	GBK 500	GBK 630
Id. No.	012439	012440	012441	012442	012443	012444	012445
B	20	22	26	32	32	45	45
H	27.5	29.5	37	43	43	57	57
L	65	85	104	115	125	160	200
N	18	20	20	20	26	30	30
S	8	10	12	12	12	18	18
kg / set	0.7	1.0	1.8	2.7	3.0	7.1	9.0

WAK
Soft top jaws

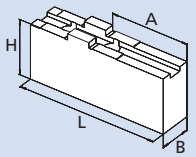

Chuck	HG-N 160	HG-N 210	HG-N 260	HG-N 315	HG-N 400	HG-N 500	HG-N 630
Jaw type	WAK 160-10	WAK 200-10	WAK 250-10	WAK 250-10	WAK 400-10	WAK 500-10	WAK 500-10
Id. No.	012491	012492	012493	012493	012494	012495	012495
B	20	22	30	30	35	50	50
H	35.5	42	50	50	54	73	73
L	85	105	125	125	145	180	180
A	42	50	70	70	74	100	100
kg / set	1.2	2.0	3.6	3.6	5.8	13.7	13.7

WAKS
Wide soft top jaws

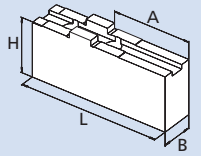

Chuck	HG-N 160	HG-N 210	HG-N 260	HG-N 315	HG-N 400	HG-N 500	HG-N 630
Jaw type	WAKS 140-10	WAKS 200-30	WAKS 250-20	WAKS 250-30	WAKS 400-30	WAKS 500-30	WAKS 500-30
Id. No.	012496	012497	012498	012499	012500	012501	012501
B	35	40	60	80	80	90	90
H	35.5	36	55	55	64	73	73
L	63	70	90	90	100	130	130
A	25	27	44	44	44	65	65
kg / set	1.5	1.9	6.2	8.5	11.0	16.4	16.4

UVB
Soft monoblock jaws

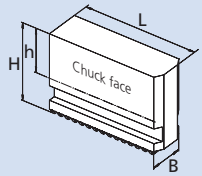

Chuck	HG-N 160	HG-N 210	HG-N 260	HG-N 315	HG-N 400	HG-N 500	HG-N 630
Jaw type	UVB 160	UVB 200	UVB 250	UVB 315	UVB 400	UVB 500	UVB 630
Id. No.	012447	012448	012449	012450	012451	012452	012453
B	20	22	26	32	32	45	45
H	60	70	90	100	100	134	134
h	39.4	45	61	66	66	87	87
L	69	83	108	119	146.5	175	230
kg / set	1.8	2.8	5.5	8.2	10	23	30

GST
Hardened stepped monoblock jaws

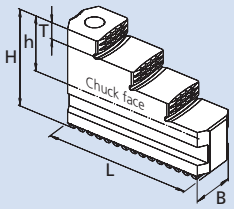

Chuck	HG-N 160	HG-N 210	HG-N 260	HG-N 315	HG-N 400	HG-N 500	HG-N 630
Jaw type	GST 170	GST 210	GST 260	GST 315	GST 400	GST 500	GST 500
Id. No.	035867	035863	037623	012457	012458	012459	012459
B	20	22	26	32	32	45	45
H	43.5	51	60	66	70	93	93
h	22	26	31.3	32	36	46	46
L	67	84	100	116.2	136.4	175	175
T	7	8	10	10	11	20	20
kg / set	0.82	1.4	2.23	3.48	4.4	11.47	11.47
A1	6-59	10-96	10-98	20-115	53-173	65-195	153-313
A2	42-89	56-130	62-150	85-180	116-238	160-285	241-401
A3	73-120	96-170	111-200	140-235	184-308	310-435	391-551
A4	104-151	136-210	161-250	195-290	252-378	-	-
J1	44-78	70-147	63-149	80-170	118-243	-	-
J2	74-110	109-187	112-199	135-225	186-310	170-295	254-414
J3	105-141	149-228	161-249	190-282	253-378	320-445	404-564
J4	135-182	186-260	212-300	255-350	328-448	-	-
S	198	244	303	350	456	540	660

Clamping ranges

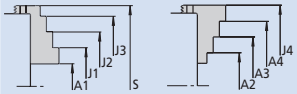

JAWS-CATALOG

Request or download: www.smw-autoblok.de

HG-N

QUICK JAW CHANGE

GUA
Hardened reversible stepped top jaws

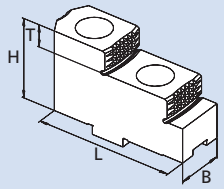

Clamping ranges

Base jaw position "o"

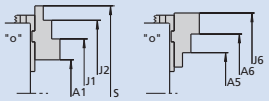

Base jaw position "p"

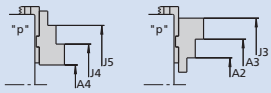

Chuck	HG-N 160	HG-N 210	HG-N 260	HG-N 315	HG-N 400	HG-N 500	HG-N 630
Jaw type	GUA 160	GUA 200	GUA 250	GUA 250	GUA 400	GUA 500	GUA 500
Id. No.	012484	012485	012486	012486	012487	012488	012488
B	20	22	30	30	36	45	45
H	36.5	38	50	50	56	70	70
L	63	72	90	90	105	130	130
T	7.5	10	14	14	15	20	20
kg / set	0.6	0.8	1.9	1.9	3.2	10.8	10.8
A1	32-69	55-111	73-161	120-205	138-258	150-308	265-469
A2	60-98	69-125	45-101	48-120	78-188	37-181	58-262
A3	85-123	96-152	125-181	130-200	186-298	144-302	179-383
A4	13-51	17-73	20-97	36-188	60-183	33-191	65-269
A5	78-116	104-163	76-165	120-205	143-268	143-301	258-462
A6	103-141	131-190	156-245	205-285	253-378	264-422	379-583
J1	91-129	117-174	152-240	202-285	218-338	259-417	374-578
J2	116-154	144-201	233-321	280-365	328-448	380-538	495-699
J3	144-181	158-215	204-259	208-280	263-380	253-411	288-492
J4	74-111	80-136	101-177	110-200	138-263	139-297	174-378
J5	99-136	107-163	180-257	198-280	248-373	260-418	295-499
J6	162-200	193-253	235-323	276-365	333-458	373-531	488-692
S	198	196-253/255	333	390	-	570	732

JAWS-CATALOG

Request or download: www.smw-autoblok.de

Important for maintenance and safe operation, to be ordered with the chuck

Grease K05®

Special grease for manual and power chucks

Cartridge 14 Oz. (DIN 1284)
Grease content 500 g
Id. No. 016440

Can 1000 g
Id. No. 011881

- High adhesion
- High resistance against coolant
- High load bearing capacity
- Low friction coefficient
- Avoids tribocorrosion

Grease gun

Grease gun (DIN 1283) for cartridges 14 Oz. (DIN 1284)

Lubrication set Id. No. 083726
Supply range
- Grease gun
- 1 Adapter flexible for high pressure grease nipple
- 1 Adapter for cone grease nipple

HG-N

QUICK JAW CHANGE
Jaw system SMW

Chuck flange for stationary mounting

- compatible with SMW zero point clamping systems
- for mounting on machining centers and milling/drilling machines
- usable with HG-N / HG-F / HG-2G

ID-No. flange
2704440
2704441

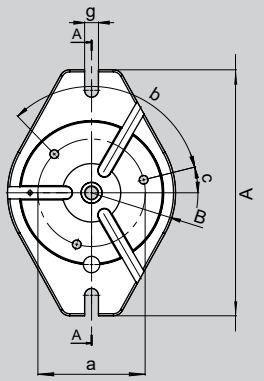

SECTION A-A

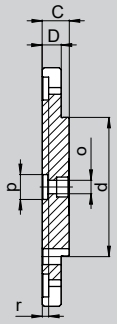

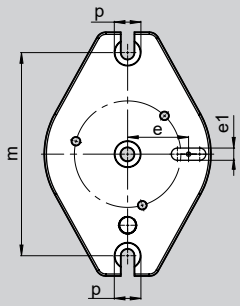

2704442

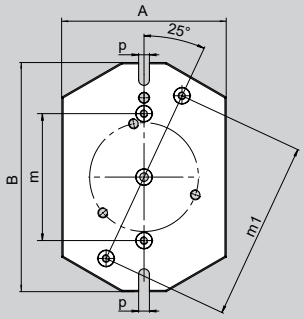

ID-No. flange
2704443
2704444

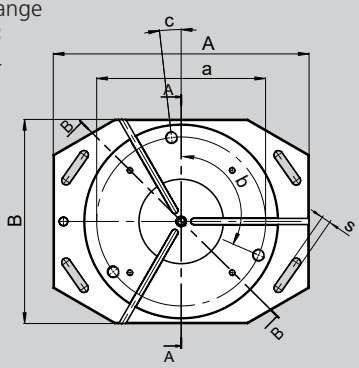

SECTION A-A

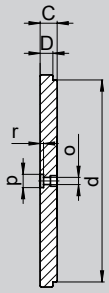

SECTION B-B

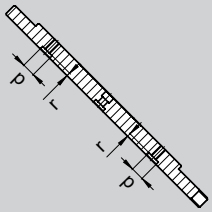

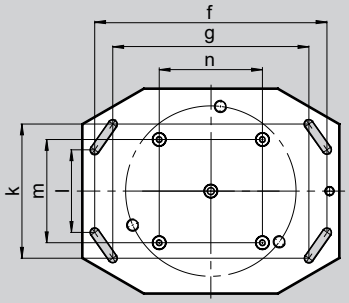

ID-No. flange
2704445

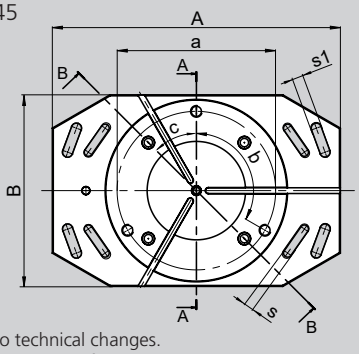

SECTION A-A

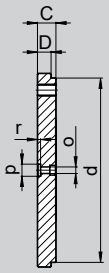

SECTION B-B

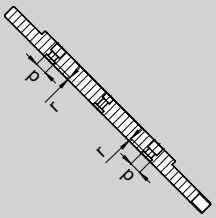

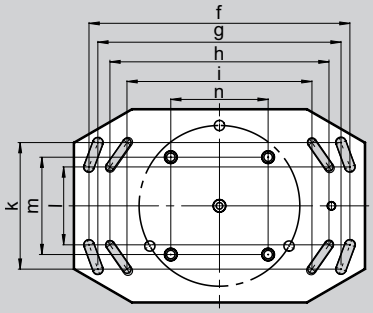

Subject to technical changes.
For more detailed information please ask our customer service.

SMW-AUTOBLOK Type			HG-N 160	HG-N 210	HG-N 260	HG-N 315	HG-N 400	HG-N 500
Mounting Id.-No. flange			Z140 2704440	Z170 2704441	Z220 2704442	Z300 2704443	Z380 2704444	Z380 2704445
	A	mm	240	300	361	455	500	600
	B	mm	Ø164	Ø208	259	314	399	399
	C	mm	27	27	30	35	38	38
	D	mm	19	19	22	27	30	28
Fixing bolt circle chuck	**a**	mm	Ø104.8 / M10	Ø133.4 / M12	Ø171.4 / M16	Ø235 / M20	Ø330.2 / M24	Ø330.2 / M24
	b	deg	3x120°					
	c	deg	14°	16°	19°	6,5°	6,5°	45°
	d	mm	140	170	220	300	380	380
Fitting groove	**e / e1**	mm	60 / 12H7	60 / 12H7	-	-	-	-
	f	mm	-	-	-	404	450	536
	g	mm	13.5	17	17	324	379.979	499.603
	h	mm	-	-		-	-	450
	i	mm	-	-	-	-	-	379.979
	k	mm	-	-	-	160	260	260
	l	mm	-	-	-	80	160	160
Mounting hole for clamping pins	**m / m1**	mm	200	200	200 / 282.843	200	200	200
	n	mm	-	-	-	200	200	200
	o	mm	Ø13.5					
	p	mm	Ø25H7					
	r	mm	5.5					
	s / s1	mm	-	-	-	17 / -	17 / -	17 / 21

Chuck with jaws and flange

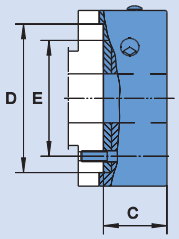

Chuck	HG-N - 160	HG-N - 210	HG-N - 260	HG-N - 315	HG-N - 400	HG-N - 500
Mounting	Z140	Z170	Z220	Z300	Z380	Z380
C	81	85.5	94	111	125	136
D	140	170	220	300	380	380
E	104.8	133.4	171.4	235	330.2	330.2
Chuck with GBK + WAK + flange						
Id.-Nr.	164289	164290	164291	164292	164293	164294

Fast changeover, fast payback:

The original quick jaw change manual chuck

HG-NB

EXTRA LARGE THROUGH-HOLE

▶ **ALL EXISTING TOP JAWS CAN BE USED**

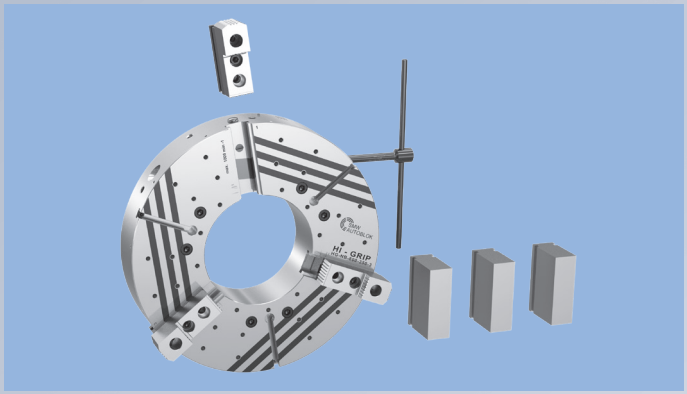

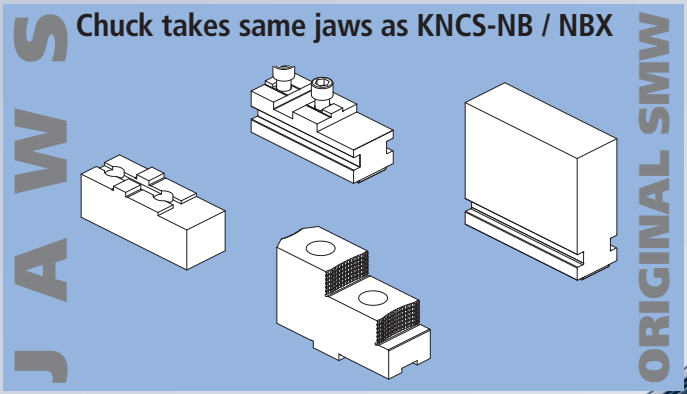

- Jaw change in less than 1 minute

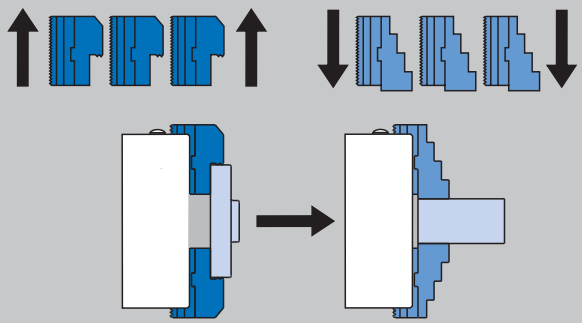

- Universal, because jaws can be radially adjusted and reversed = less jaw sets

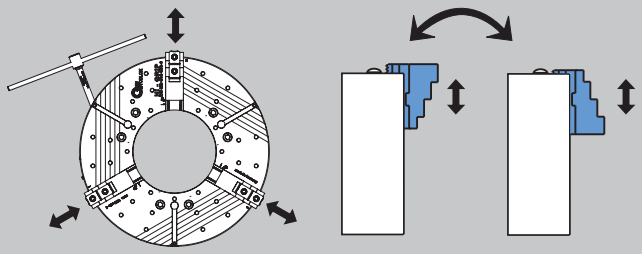

Jaws radially adjustable — Jaws 180° reversed

Flat gripping force curve for highest speeds

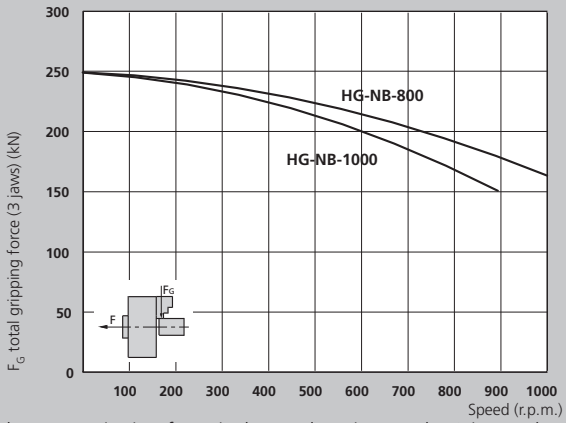

- The max. gripping force is the total, acting on the 3 jaws, obtained by applying to the chuck the max. allowed driving torque. The data refers to a chuck newly maintained accordingly to their service manual, using SMW K05 grease.
- The dynamic gripping forces have been measured using hardened standard stepped monoblock jaws placed in a position not exceeding the outer diameter of the chuck.

⚠ **Safety advice / danger of damage:**
When using taller / havier jaws and / or clamping on a more external position reduce driving torque / rotating speed accordingly.

Less costs by using all existing top jaws from:

- SMW-AUTOBLOK
- Autoblok
- Buck
- Forkardt
- Gamet
- Howa
- Kitagawa
- Logansport
- Mario Pinto
- Matsumoto
- Pratt Burnerd
- Röhm
- Rotomors
- Schunk
- Berg
- Woodworth

If your jaw type is not included, please contact us.

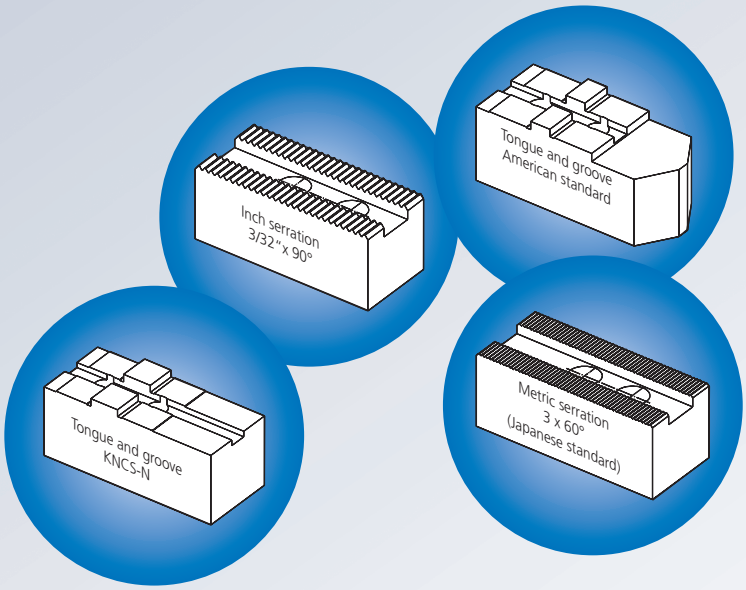

Wedge bar design guarantees highest precision, concentricity and repeatability as well as highest gripping forces

Safety jaw release with interlock

Jaw system SMW (same like KNCS-NB / KNCS-NBX)

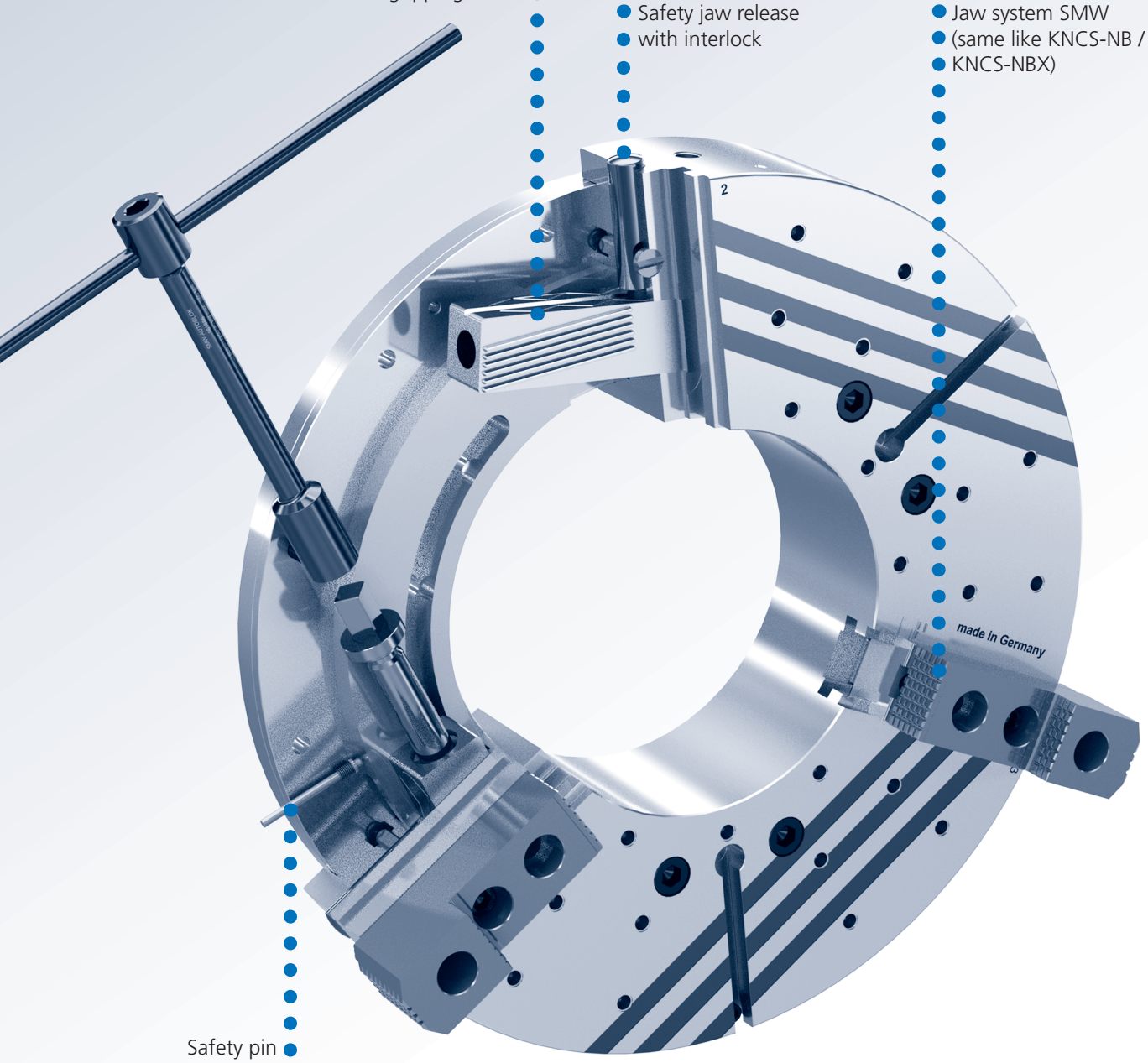

Safety pin indicates correct jaw stroke position

HG-NB

QUICK JAW CHANGE
Jaw system original SMW

Manual chuck

■ Main dimensions and technical data

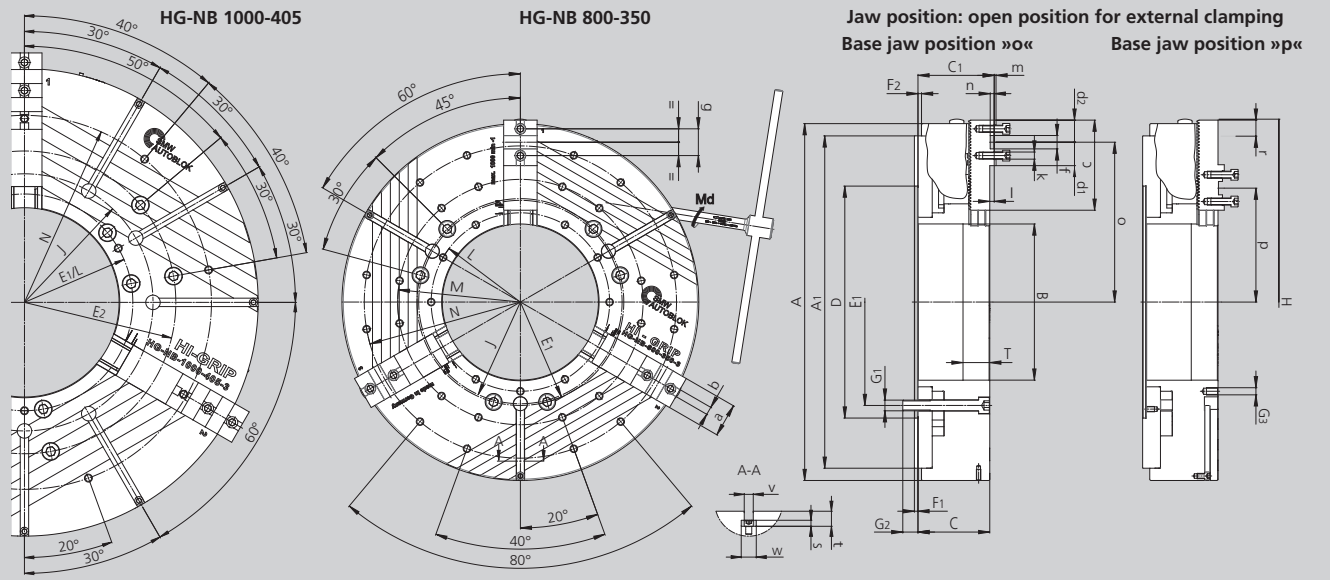

Subject to technical changes.
For more detailed information please ask our customer service.

Base jaw position with GBK-B

SMW-AUTOBLOK Type		HG-NB 800-350	HG-NB 1000-405
Mounting	**Size**	**Z520**	**Z720**
	A	800	1000
	A1	745	880
	B	350	405
	C	161	161
	C1	171	171
	D	520	720
	E1	463.6	463.6
	E2	-	647.6
	F1	8	8
	F2	8	8
	G1	M24 (6x)	M24 (12x)
	G2	34	34
Threads front face	**G3**	M16 (33x) / 26	M16 (9x) / 25
Swing dia.	**H**	839	1070
	J	456	550
	L	400	463.6
	M	550	-
	N	700	800
	T	60	60
Base jaw	**-**	GBK-B 630	GBK-B 800
	a	75	75
	b	18	18
	c	202	286
	d1	52.5	113
	d2	49.5	50.5
	f	30	30
	g	60	60
	k	M16	M16
	l	10	10
	m	4	4
	n	9	9
Max. / min.	**o**	368.4 / 277.4	478 / 303
Max. / min.	**p**	265.4 / 174.4	293 / 118
Base jaw tooth pitch	**-**	7	7
Base jaw offset	**r**	91	175
Base jaw offset	teeth	13	25
	s	12	12
	t	30	30
H8	**v**	18	18
	w	30	30

Usable jaw stroke	mm	13	13.2
Max. total gripping force	kN	250	250
At max. torque Md	Nm	350	350
Speed	r.p.m.	1000	900
Weight without jaws	kg	475	745
Moment of inertia	kg·m²	45.5	109

HG-NB

QUICK JAW CHANGE
Wide master jaws

■ Ordering review

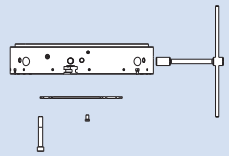

Spindle mounting \ Size	HG-NB 800-350	HG-NB 1000-405
Centering rim	Z520 161880	Z720 161910

Supply range
Chuck + actuation wrench + mounting bolts + 1 set of coverplates without base jaws

Base jaw type

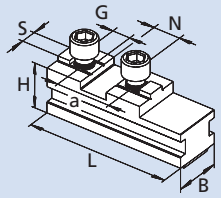

GBK-B

TONGUE & GROOVE KNCS-N standard

Chuck	HG-NB 800-350	HG-NB 1000-405
Id. No.	035902	064604
B	75	75
H	57	57
L	202	286
N	30	30 (2x)
S	18	18
G (metric)	M16	M16
a	60	2 x 60

Existing top jaw

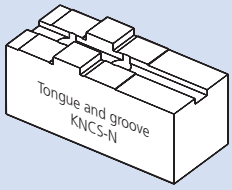

Base jaw type

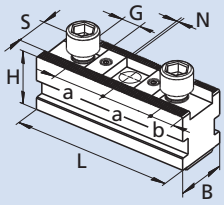

GBK-BD

INCH SERRATED (for SMW-AUTOBLOK standard jaws)

Chuck	HG-NB 800-350	HG-NB 1000-405
Id. No.	036295	036296
B	75	75
H	61	61
L	202	286
N	3/32" x 90°	3/32" x 90°
S (ridge)	25.5	25.5
G	M20	M20
a	38 / 38 / 52 / 38	3x38 / 60.7 / 2x38
b	18	17.5

Existing top jaw

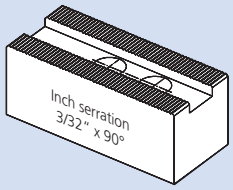

Base jaw type

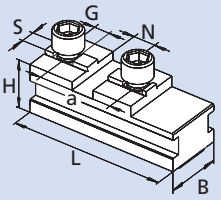

GBK-BA

TONGUE & GROOVE American standard

Chuck	HG-NB 800-350	HG-NB 1000-405
Id. No.	060562	064590
B	75	75
H	57	57
L	202	286
N	19.02	19.02 (2x)
S	12.7	12.7
G (inch)	3/4-10	3/4-10
a	76.2	2 x 76.2

Existing top jaw

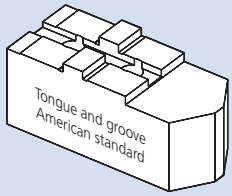

Base jaw type

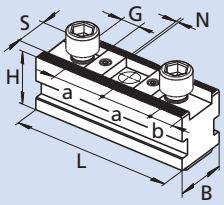

GBK-BM

METRIC SERRATION

Chuck	HG-NB 800-350	HG-NB 1000-405
Id. No.	035917	036708
B	75	75
H	61	61
L	202	286
N	3 x 60°	3 x 60°
S	25	25
G (metric)	M20	M20
a	2 x 60	60 / 60 / 70.5 / 60
b	18	17.5

Existing top jaw

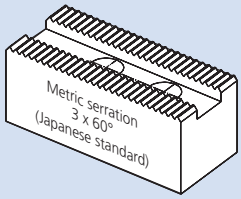

Jaw type

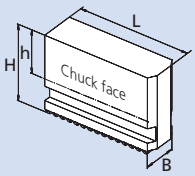

UVB-B

Soft wide monoblock jaws

Chuck	HG-NB 800/1000
Jaw type	UVB-B 630
Id. No.	5301060
B	75
H	160
h	105
L	230
kg / set	61.5

NEW GENERATION

The sealed quick jaw change manual chuck

HG-2G

▶ ALL EXISTING TOP JAWS CAN BE USED

Customer Benefits

	HG-N	HG-2G
Minimized set up times due to the quick jaw change system	■	■
Highest accuracy of the jaw change	■	■
Universal applicable	■	■
Case hardened parts	■	■
Wedge bar drive	■	■
Jaw safety interlock	■	■
Ideal for vertical mounting of chuck		■
Sealed wedge bars and base jaws		■
Optimized lubrication in the jaw guides		■
Low maintenance		■

Economic and Efficiency

Example: Maintenance costs at high accumulation of dirt / coolant

		HG-N	HG-2G
Lubrication interval		every shift	every 3rd shift
Required time for lubricating		10 Min.	10 Min.
Working days / year		230	230
Required time / year		2.300 Min.	767 Min.
Machine costs / hour		$ 60.–	$ 60.–
Total costs / year		$ 2.300.–	$ 767.–
Profit / year *	**at 1-shift operation**		**$ 1.533.–**
	at 2-shift operation		**$ 3.066.–**
	at 3-shift operation		**$ 4.599.–**

* Additionally the profit is increased by reducing the down time of the machine, as the 2G-chucks also need less disassembling for cleaning.

Clamping glossary

HG-2G: Evolution of the quick jaw change power chuck HG-N. The HG-2G features additional seals and an improved lubrication system for low maintenance. **The chuck still offers all the same advantages as the HG-N.**

The proven wedge bar drive guaranties unmatched accuracy and rigidity. A low loss of grip force due to centrifugal force makes the chuck ideal for high speed applications.

Sealing: The HG-2G is sealed by seals attached to both faces of the base jaws. Also the wedge bars are protected by mechanical seals. The seals **protect the chuck** against penetration of dirt and swarf.

Low Maintenance: The **lubrication system of the HG-2G is optimized**. Additional lubrication channels and grease pockets integrated in the jaw guide ways ensure constant clamping force. The lubrication intervals are significantly longer reducing down times and cost for maintenance.

Mass production: The sealing and the new lubrication system make the HG-2G also suitable for use on machining centers or turning and milling centers in vertical operation.

Compatibility: The HG-2G is interchangeable with the standard series of quick jaw change chucks HG-N. Existing master jaws still can be used without sealing. A small modification made to the master jaws and a **mounting kit** can upgrade existing master jaws to become 2G master jaws.

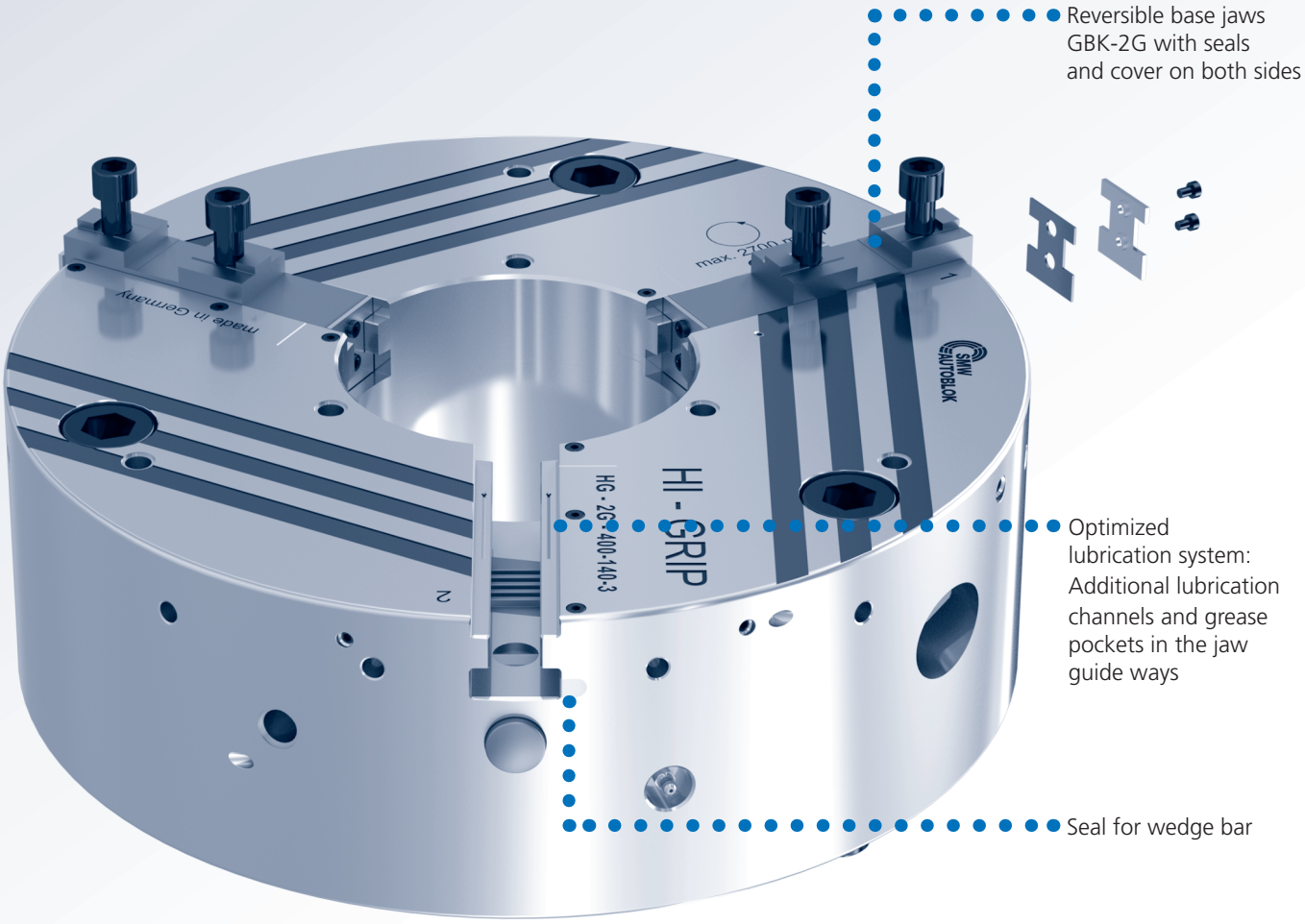

HG-2G

QUICK JAW CHANGE
Jaw system original SMW

Manual chuck

■ Main dimensions and technical data

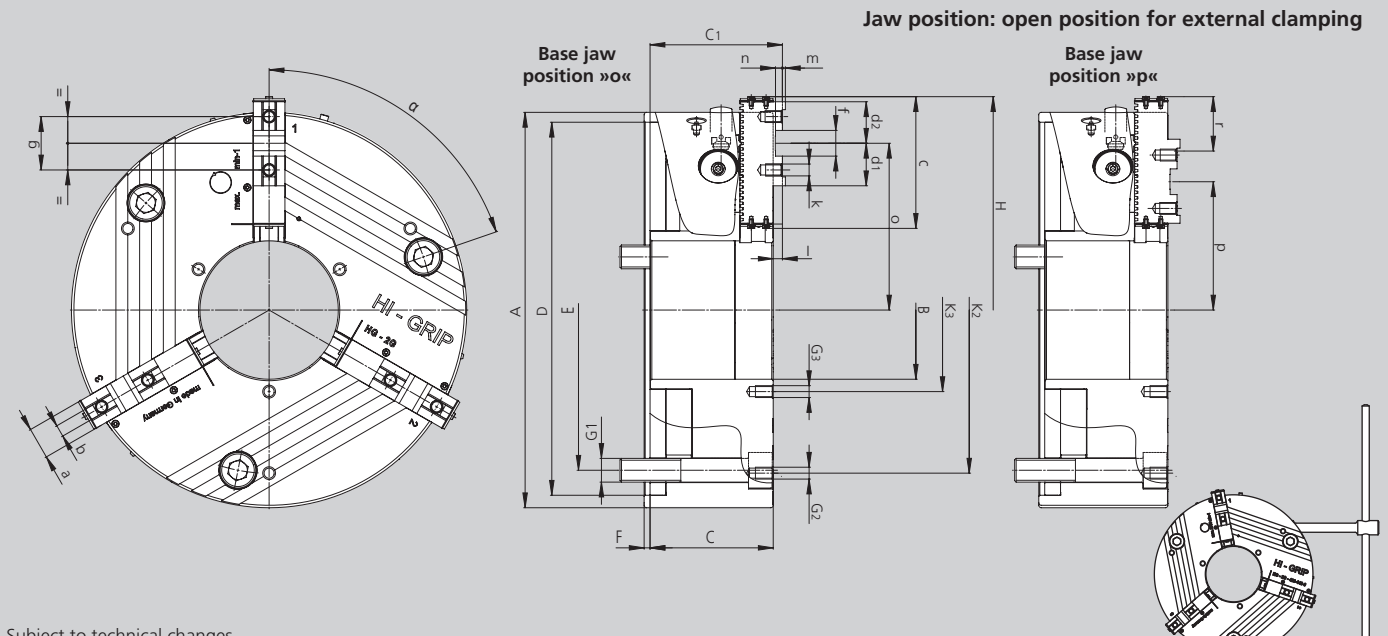

Subject to technical changes.
For more detailed information please ask our customer service.

SMW-AUTOBLOK Type		HG-2G 315-102	HG-2G 400-140	HG-2G 500-165	HG-2G 630-254
Mounting	**Size**	**Z300**	**Z380**	**Z380**	**Z380**
	A	315	400	500	630
	B	102	140	165	254
	C	110,8	124.6	136	143
	C1	120,1	133.9	146	153
H6	**D**	300	380	380	380
	E	235	330.2	330.2	330.2
	F	6	6	8	8
	G1	M20	M24	M24	M24
	G2	M10 / 3x120°	M12 / 3 x 120°	M16 / 9 x 40°	M16 / 6 x 60°
	G3	M10 / 3x120°	M12 / 3 x 120°	M12 / 3 x 120°	M12 / 3 x 120°
Swing dia.	**H**	361	432	on request	on request
	K2	268	330	420	550
	K3	120	165	195	290
	α	71°	71°	71°	74°
Master jaw		GBK-2G 315	GBK-2G 400	GBK-2G 500	GBK-2G 630
	a	32	32	45	45
f7	**b**	12	12	18	18
	c	122,2	133.2	167.7	209.7
	d1	36	43	53	53
	d2	34	42	48.25	49.7
H7	**f**	20	26	30	30
	g	40	54	60	60
Thread / thread depth	**k**	M12 / 17	M12 / 17	M16 / 34	M16 / 34
	l	9,3	9.3	10	10
	m	3	3	4	4
	n	6	7	9	9
Max. / min.	**o**	138,2 / 99,7	168.8 / 113.8	211 / 141	291.5 / 200.5
Max. / min.	**p**	94,2 / 55,7	129.8 / 74.8	150 / 80	191.5 / 100.5
Base jaw tooth pitch	**-**	5,5	5.5	7	7
Master jaw offset	**r**	38,5	55	70	91
Master jaw offset	teeth	7	10	10	13
Usable jaw stroke	mm	7	8.5	11.5	13
Max. total gripping force	kN	180	220	250	250
At max. torque Md	Nm	200	250	260	350
Speed	r.p.m.	3500	2700	1500	1000
Weight without jaws	kg	53	99	161	270
Moment of inertia	kg·m²	0,73	1.9	4.5	12

Further sizes on request.

HG-2G

QUICK JAW CHANGE
Jaw system original SMW

Chuck with center mounting DIN 6350

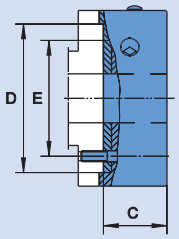

Chuck	HG-2G 315-102	HG-2G 400-140	HG-2G 500-165	HG-2G 630-254
Mounting	Z300	Z380	Z380	Z380
C	111	125	136	136
D	300	380	380	380
E	235,0	330.2	330.2	330.2
Chuck with GBK-2G + WAK				
Id. No.	164104	161729	161813	161827
Chuck with GBK-2G + GUA				
Id. No.	164105	161800	161814	161828

Chuck with ISO-A mounting DIN 55026

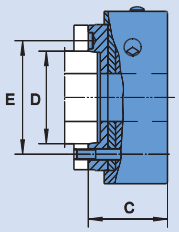

Chuck	HG-2G 315-102		HG-2G 400-140		HG-2G 500-165		HG-2G 630-254	
Mounting	A08	A11	A11	A15	A11	A15	A11	A15
C	141	141	165	161	176	172	176	172
D	139,73	196,88	196.88	285.77	196.88	285.77	196.88	285.77
E	171,4	235,0	235.0	330.2	235.0	330.2	235.0	330.2
Chuck with GBK-2G + WAK								
Id. No.	164106	164108	161801	161807	161815	161821	161829	161835
Chuck with GBK-2G + GUA								
Id. No.	164107	164109	161802	161808	161816	161822	161830	161836

Chuck with bayonet mounting DIN 55027 Type C

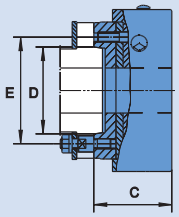

Chuck	HG-2G 315-102		HG-2G 400-140		HG-2G 500-165		HG-2G 630-254	
Mounting	C08	C11	C11	C15	C11	C15	C11	C15
C	141	141	161	161	172	172	172	172
D	139,73	196,88	196.88	285.77	196.88	285.77	196.88	285.77
E	171,4	235,0	235.0	330.2	235.0	330.2	235.0	330.2
Chuck with GBK-2G + WAK								
Id. No.	164110	164112	161803	161809	161817	161823	161831	161837
Chuck with GBK-2G + GUA								
Id. No.	164111	164113	161804	161810	161818	161824	161832	161838

Chuck with Camlock mounting DIN 55029 Type S

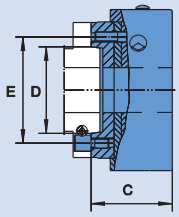

Chuck	HG-2G 315-102		HG-2G 400-140		HG-2G 500-165		HG-2G 630-254	
Mounting	S08	S11	S11	S15	S11	S15	S11	S15
C	154	154	175	175	186	186	186	186
D	139,73	196,88	196.88	285.77	196.88	285.77	196.88	285.77
E	171,4	235,0	235.0	330.2	235.0	330.2	235.0	330.2
Chuck with GBK-2G + WAK								
Id. No.	164114	164116	161805	161811	161819	161825	161833	161839
Chuck with GBK-2G + GUA								
Id. No.	164115	164117	161806	161812	161820	161826	161834	161840

Parts included: Fixing elements (screws resp. studs resp. camlock bolts).
Further sizes on request.

HG-2G

QUICK JAW CHANGE

■ Jaws

GBK-2G
Hardened base jaws

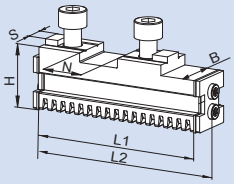

Chuck	HG-2G 315	HG-2G 400	HG-2G 500	HG-2G 630
Jaw type	GBK-2G 315	GBK-2G 400	GBK-2G 500	GBK-2G 630
Id. No.	161329	161605	161843	161846
B	32	32	45	45
H	43	43	57	57
L1	112	123	158	198
L2 *	122.2	133.2	168.2	208.2
N	20	26	30	30
S	12	12	18	18
kg / set	2.7	3.0	7.1	9.0

* Dimension incl. seals, cover and screws

WAK
Soft top jaws

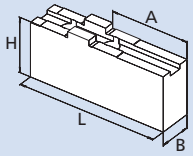

Chuck	HG-2G 315	HG-2G 400	HG-2G 500	HG-2G 630
Jaw type	WAK 250-10	WAK 400-10	WAK 500-10	WAK 500-10
Id. No.	012493	012494	012495	012495
B	30	35	50	50
H	50	54	73	73
L	125	145	180	180
A	70	74	100	100
kg / set	3,6	5.8	13.7	13.7

WAKS
Wide soft top jaws

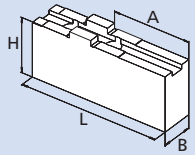

Chuck	HG-2G 315	HG-2G 400	HG-2G 500	HG-2G 630
Jaw type	WAKS 250-30	WAKS 400-30	WAKS 500-30	WAKS 500-30
Id. No.	012499	012500	012501	012501
B	80	80	90	90
H	55	64	73	73
L	90	100	130	130
A	44	44	65	65
kg / set	8,5	11.0	16.4	16.4

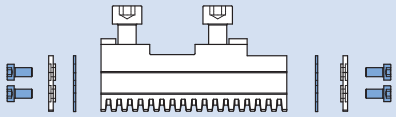

Seal Kit
for hardened base jaws GBK-2G
Consisting of seals (6 pcs.)
and mounting screws (12 pcs.)

HG-2G	315 / 400	500	630
Seal kit type	GBK-2G 315 / 400	GBK-2G 500	GBK-2G 630
Id. No.	205384	206915	206915

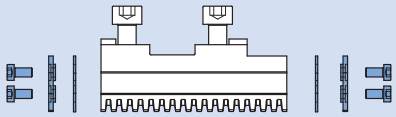

Mounting Kit
for hardened base jaws GBK-2G
Consisting of seals (6 pcs.), covers (6 pcs.)
and mounting screws (12 pcs.)

HG-2G	315 / 400	500	630
Mounting kit type	GBK-2G 315 / 400	GBK-2G 500	GBK-2G 630
Id. No.	205388	206916	206916

Advice: Existing master jaws still can be used without seals. A small modification made to the master jaws and a mounting kit can upgrade existing master jaws to become 2G master jaws (instruction for the rework on request).

HG-2G

QUICK JAW CHANGE

GUA
Hardened reversible stepped top jaws

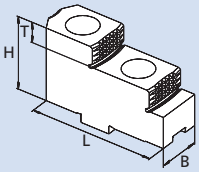

Clamping ranges

Base jaw position "o"

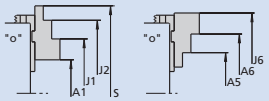

Base jaw position "p"

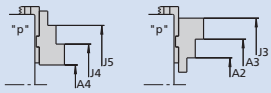

Chuck	HG-2G 315	HG-2G 400	HG-2G 500	HG-2G 630
Jaw type	GUA 250	GUA 400	GUA 500	GUA 500
Id. No.	012486	012487	012488	012488
B	30	36	45	45
H	50	56	70	70
L	90	105	130	130
T	14	15	20	20
kg / set	1,9	3.2	10.8	10.8
A1	120-205	138-258	150-308	265-469
A2	48-120	78-188	37-181	58-262
A3	130-200	186-298	144-302	179-383
A4	36-188	60-183	33-191	65-269
A5	120-205	143-268	143-301	258-462
A6	205-285	253-378	264-422	379-583
J1	202-285	218-338	259-417	374-578
J2	280-365	328-448	380-538	495-699
J3	208-280	263-380	253-411	288-492
J4	110-200	138-263	139-297	174-378
J5	198-280	248-373	260-418	295-499
J6	276-365	333-458	373-531	488-692
S	390	-	570	732

JAWS-CATALOG

Request or download: www.smw-autoblok.de

Important for maintenance and safe operation, to be ordered with the chuck

Grease K05®

Special grease for manual and power chucks

Cartridge 14 Oz. (DIN 1284)
Grease content 500 g
Id. No. 016440

Can 1000 g
Id. No. 011881

- High adhesion
- High resistance against coolant
- High load bearing capacity
- Low friction coefficient
- Avoids tribocorrosion

Grease gun

Grease gun (DIN 1283) for cartridges 14 Oz. (DIN 1284)

Lubrication set Id. No. 083726
Supply range
- Grease gun
- 1 Adapter flexible for high pressure grease nipple
- 1 Adapter for cone grease nipple

NEW GENERATION

The sealed quick jaw change manual chuck

HG-B-2G

► ALL EXISTING TOP JAWS CAN BE USED

Customer benefits

	HG-NB	HG-B-2G
Minimized set up times due to the quick jaw change system	■	■
Highest accuracy of the jaw change	■	■
Universal applicable	■	■
Case hardened parts	■	■
Wedge bar drive	■	■
Jaw safety interlock	■	■
Ideal for vertical mounting of chuck		■
Sealed wedge bars and base jaws		■
Optimized lubrication in the jaw guides		■
Low maintenance		■

Economic and efficiency

Example: Maintenance costs at high accumulation of dirt / coolant

		HG-NB	HG-B-2G
Lubrication interval		every shift	every 3rd shift
Required time for lubricating		10 Min.	10 Min.
Working days / year		230	230
Required time / year		2.300 Min.	767 Min.
Machine costs / hour		$ 60.–	$ 60.–
Total costs / year		$ 2.300.–	$ 767.–
Profit / year *	**at 1-shift operation**		**$ 1.533.–**
	at 2-shift operation		**$ 3.066.–**
	at 3-shift operation		**$ 4.599.–**

* Additionally the profit is increased by reducing the down time of the machine, as the 2G-chucks also need less disassembling for cleaning.

Clamping glossary

HG-B-2G: Evolution of the quick jaw change power chuck HG-NB. The HG-B-2G features additional seals and an improved lubrication system for low maintenance. **The chuck still offers all the same advantages as the HG-NB.**

The proven wedge bar drive guarantees unmatched accuracy and rigidity. A low loss of grip force due to centrifugal force makes the chuck ideal for high speed applications.

Sealing: The HG-B-2G is sealed by seals attached to both faces of the base jaws. Also the wedge bars are protected by mechanical seals. The seals **protect the chuck** against penetration of dirt and swarf.

Low Maintenance: The lubrication system of the HG-B-2G is optimized. Additional lubrication channels and grease pockets integrated in the jaw guide ways ensure constant clamping force. The lubrication intervals are significantly longer reducing down times and cost for maintenance.

Mass production: The sealing and the new lubrication system make the HG-B-2G also suitable for use on machining centers or turning and milling centers in vertical operation.

Compatibility: The HG-B-2G is interchangeable with the standard series of quick jaw change chucks HG-NB. Existing master jaws still can be used without sealing. A small modification made to the master jaws and a **mounting kit** can upgrade existing master jaws to become 2G master jaws.

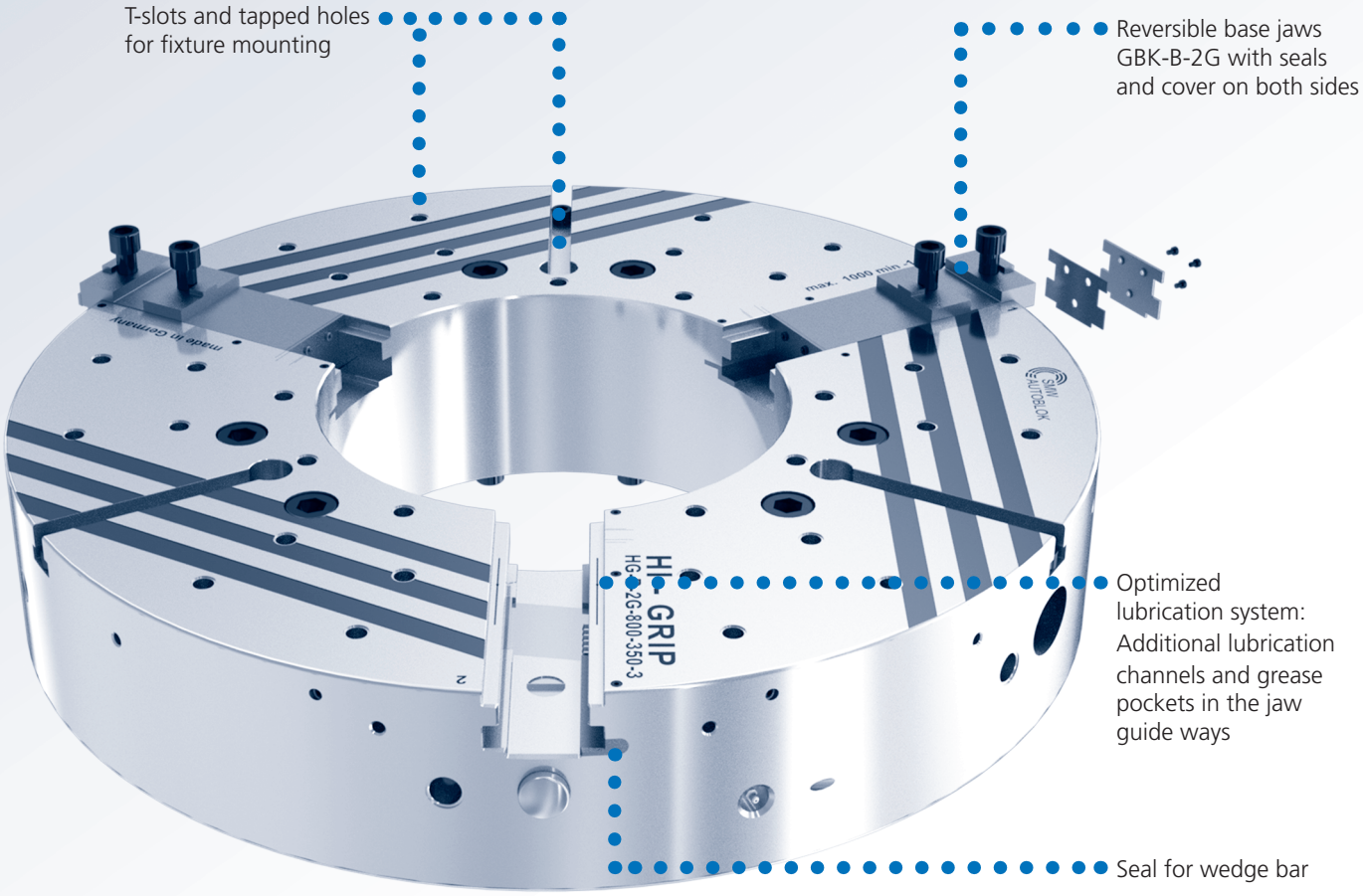

8

HG-B-2G

Manual chuck

QUICK JAW CHANGE
Jaw system original SMW

■ Main dimensions and technical data

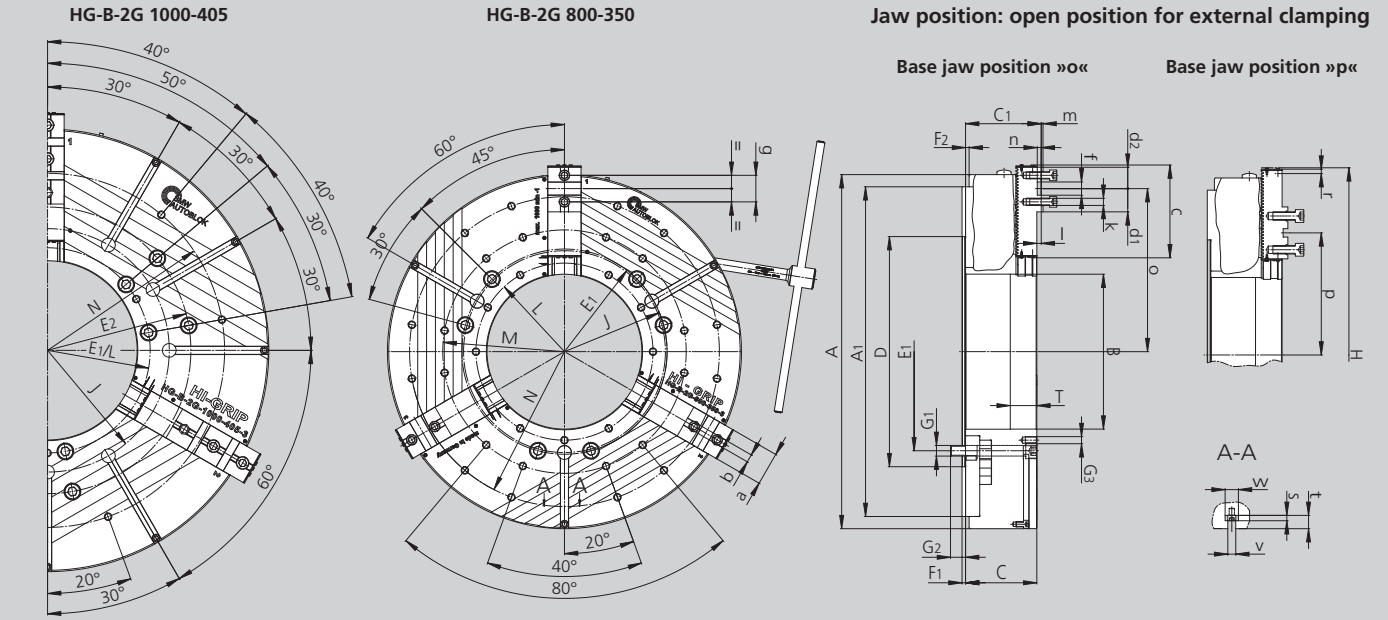

Subject to technical changes.
For more detailed information please ask our customer service.

Base jaw position with GBK-B-2G

SMW-AUTOBLOK Type		HG-B-2G 800-350	HG-B-2G 1000-405
Mounting	**Size**	**Z520**	**Z720**
	A	800	1000
	A1	745	880
	B	350	405
	C	161	161
	C1	171	171
	D	520	720
	E1	463.6	463.6
	E2	-	647.6
	F1	8	8
	F2	8	8
	G1	M24 (6x)	M24 (12x)
	G2	34	34
Threads front face	**G3**	M16 (33x) / 26	M16 (9x) / 25
Swing dia.	**H**	845	1076
	J	456	550
	L	400	463.6
	M	550	-
	N	700	800
	T	60	60
Base jaw	**-**	GBK-B-2G 630	GBK-B-2G 800
	a	75	75
	b	18	18
	c	209.7	293.4
	d1	52.5	113
	d2	48.25	49
	f	30	30
	g	60	60
	k	M16	M16
	l	10	10
	m	4	4
	n	9	9
Max. / min.	**o**	368.4 / 277.4	478 / 303
Max. / min.	**p**	265.4 / 174.4	353 / 178
Base jaw tooth pitch	**-**	7	7
Base jaw offset	**r**	91	175
Base jaw offset	teeth	13	25
	s	12	12
	t	30	30
H8	**v**	18	18
	w	30	30
Usable jaw stroke	mm	13	13.2
Max. total gripping force	kN	250	250
At max. torque Md	Nm	350	350
Speed	r.p.m.	1000	900
Weight without jaws	kg	475	745
Moment of inertia	kg·m²	45.5	109

HG-B-2G

QUICK JAW CHANGE
Wide master jaws

■ Ordering review

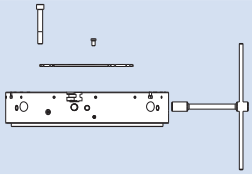

Spindle mounting \ Size	HG-B-2G 800-350	HG-B-2G 1000-405
Centering rim	Z520 162300	Z720 162340

Supply range
Chuck + actuation wrench + mounting bolts + set of coverplates without base jaws

Base jaw type — GBK-B-2G

TONGUE & GROOVE KNCS-N standard

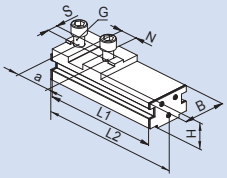

Chuck	HG-B-2G 800-350	HG-B-2G 1000-405
Id. No.	162316	162319
B	75	75
H	57	57
L1	199.5	283.2
L2 *	209.7	293.4
N	30	30 (2x)
S	18	18
G (metric)	M16	M16
a	60	2 x 60

* Dimensions incl. seals, covers and mounting screws

Existing top jaw

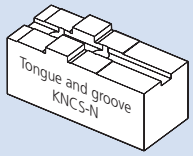

Base jaw type — GBK-BD-2G

INCH SERRATED (for SMW-AUTOBLOK standard jaws)

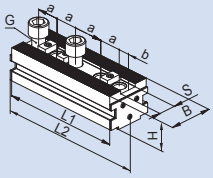

Chuck	HG-B-2G 800-350	HG-B-2G 1000-405
Id. No.	162462	162463
B	75	75
H	61	61
L1	199.5	283.5
L2 *	209.7	293.7
N	3/32" x 90°	3/32" x 90°
S (ridge)	25.5	25.5
G	M20	M20
a	38 / 38 / 52 / 38	38 / 38 / 38 / 60.7 / 38 / 38
b	16.75	16.25

* Dimensions incl. seals, covers and mounting screws

Existing top jaw

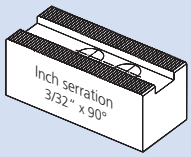

Base jaw type — GBK-BA-2G

TONGUE & GROOVE American standard

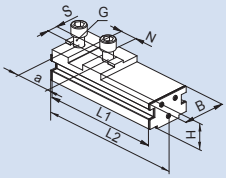

Chuck	HG-B-2G 800-350	HG-B-2G 1000-405
Id. No.	162315	162349
B	75	75
H	57	57
L1	199.5	283.2
L2 *	209.7	293.4
N	19.02	19.02 (2x)
S	12.7	12.7
G (inch)	3/4 - 10	3/4 - 10
a	76.2	2 x 76.2

* Dimensions incl. seals, covers and mounting screws

Existing top jaw

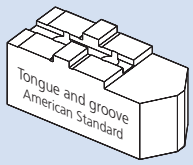

Base jaw type — GBK-BM-2G

METRIC SERRATION

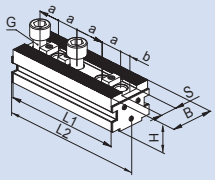

Chuck	HG-B-2G 800-350	HG-B-2G 1000-405
Id. No.	162464	162465
B	75	75
H	61	61
L1	199.5	283.5
L2 *	209.7	283.7
N	3 x 60°	3 x 60°
S	25	25
G (metric)	M20	M20
a	60 / 60	60 / 60 / 70.5 / 60
b	16.75	16.75

* Dimensions incl. seals, covers and mounting screws

Existing top jaw

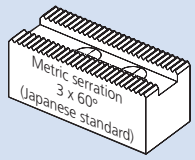

Seal Kit

for hardened base jaws GBK-B-2G / GBK-BD-2G / GBK-BA-2G / GBK-BM-2G
Consisting of seals (6 pcs.) and mounting screws (12 pcs.)

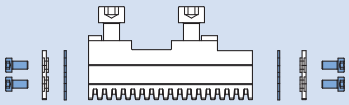

Chuck	HG-B-2G 800-350	HG-B-2G 1000-405
Seal Kit Type	GBK-B-2G 630	GBK-B-2G 800
Id. No.	207673	207673

Mounting Kit

for hardened base jaws GBK-B-2G / GBK-BD-2G / GBK-BA-2G / GBK-BM-2G
Consisting of seals (6 pcs.), covers (6 pcs.) and mounting screws (12 pcs.)

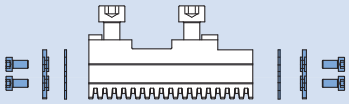

Chuck	HG-B-2G 800-350	HG-B-2G 1000-405
Mounting Kit Type	GBK-B-2G 630	GBK-B-2G 800
Id. No.	207674	207674

Advice: Existing master jaws still can be used without seals. A small modification made to the master jaws and a mounting kit can upgrade existing master jaws to become 2G master jaws (instruction for the rework on request).

PTF

TONGUE & GROOVE
Manual clamping and radial setting of jaws

High precision 4-jaw independent manual chuck Ø 530 - 2000 mm

- **Closed center**
- **4 jaws (all diameters)**

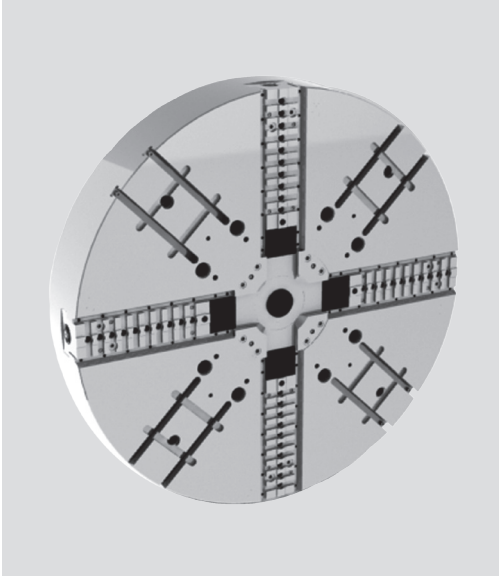

Application/customer benefits

- Clamping of large round, square and irregular parts
- Manual, radial setting of component and manual clamping
- Suitable for vertical machines. Strong body and master jaws design and option to easily mount a strong center point
- High gripping force allowed by the strong design, with the option to increase it with a torque multiplier
- Tongue & groove master jaws (type "American Standard")

Technical features

- Manual gripping force applied by a strong and protected screw on a strong and rigid master jaw
- Manual and fine setting of master jaws for workpiece centering
- Protection from contamination with seals along the master jaw profiles
- Possibility to use jaw boxes for manual clamping mounted on the T-slots between the master jaws

Standard equipment

4-jaw independent manual chuck
1 set of soft top jaws
1 regulation and actuation key
1 grease gun and 500g grease

Ordering example

4-jaw independent chuck PTF 1600 / Z720
Id. No. 77137063
Option: 5:1 torque multiplier
Id. No. 13506320

Optional: 5:1 torque multiplier

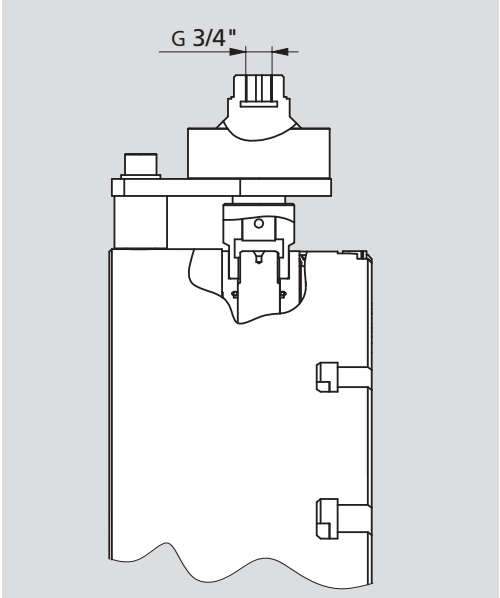

Optional 5:1 torque multiplier
To achieve the maximum gripping force and speed, the easiest and most comfortable way is to use this multiplier that will increase 5 times the input torque.
Id. No. 13506320

Soft and hard top jaws for PTF

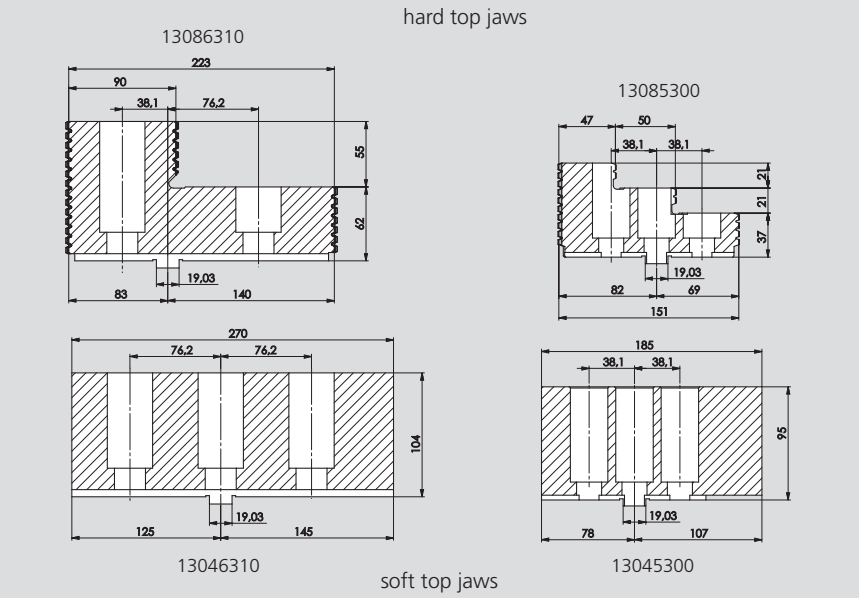

⚠ **Safety advice / danger of damage:**
When using taller / heavier jaws and / or clamping on a bigger diameter reduce operating torque / rotating speed accordingly.

Technical data

SMW-AUTOBLOK Type		PTF 530	PTF 660	PTF 800	PTF 1000	PTF 1250	PTF 1400	PTF 1600	PTF 2000
Radial jaw stroke (manual setting)	mm	45	60	55	60	60	60	60	80
Max. manual operating torque	Nm	300	300	300	600	600	700	700	700
Max. total gripping force*	kN	160	160	160	360	360	360	360	360
Max. speed	r.p.m.	1000	800	600	550	450	380	340	280
Weight (without top jaws)	kg	216	357	55	730	930	1435	1860	2730
Moment of inertia	kg·m²	8	20	46	89	183	364	565	1380
Hard top jaw (piece)	Id. No.	13085300	13085300	13085300	13086310	13086310	13086310	13086310	13086310
Soft top jaw (piece)	Id. No.	13045300	13045300	13045300	13046310	13046310	13046310	13046310	13046310
Id. No. PTF		77137053	77137066	77137080	77137039	77137049	77137055	77137063	77137079

* at max. torque.

High precision 4-jaw independent manual chuck Ø 530 - 2000 mm

- Closed center
- 4 jaws (all diameters)

PTF

TONGUE & GROOVE
Manual clamping and radial setting of jaws

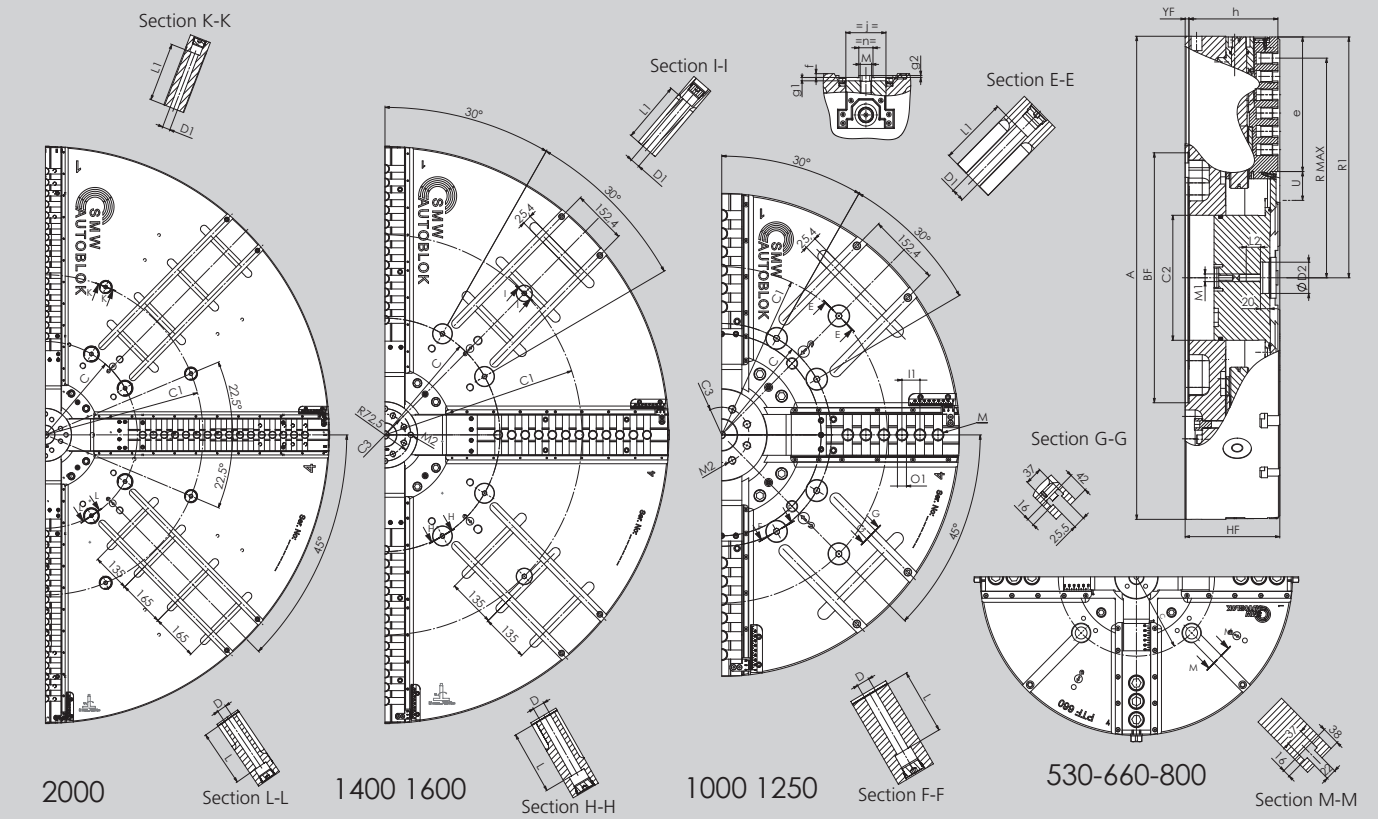

Subject to technical changes.
For more detailed information please ask our customer service.

SMW-AUTOBLOK Type				PTF 530	PTF 660	PTF 800	PTF 1000	PTF 1250	PTF 1400	PTF 1600	PTF 2000
Mounting				Z380	Z380	Z520	Z520	Z520	Z720	Z720	Z720
	A		mm	530	660	800	1005	1250	1400	1600	2000
	B_F	H6	mm	380	380	520	520	520	720	720	720
	C		mm	330.2	330.2	463.6	463.6	463.6	647.6	647.6	647.6
	C_1		mm	-	-	-	700	700	1110	1110	1110
	C_2		mm	135	135	175	260	260	300	300	300
	C_3		mm	55	55	85	115	115	115	115	115
	D		mm	27	27	27	27	27	33	33	33
	D_1		mm				27	27	27	27	27
	D_2		mm	30	30	45	65	65	65	65	65
	H_F		mm	148	148	158	200	200	240	240	260
	L		mm	67	67	77	137	139	177	177	197
	L_1		mm	-	-	-	145	145	177	173	205
	L_2		mm	22	22	28	30	30	24	24	24
Chuck open	R_1		mm	260	327	396	501	623	696	796	996
Chuck open	R_{max}		mm	230	297	356	457	563	657	738	914
Radial jaw stroke	U		mm	45	60	55	60	60	60	60	80
	Y_F		mm	5	5	5	8	8	8	8	8
	e		mm	135	172	240	280	402	439	536	704
	f		mm	7	7	7	8	8	8	8	8
	g_1		mm	7	7	7	7	7	7	7	7
	g_2		mm	3	3	3	4	4	4	4	4
	h		mm	139	139	146	188	188	228	228	248
	j		mm	60	60	70	85	85	110	110	110
	l_1		mm	38.1	38.1	38.1	38.1	38.1	38.1	38.1	38.1
	M		mm	M20	M20	M20	M24	M24	M24	M24	M24
	M_1		mm	M12	M12	M16	M16	M16	M24	M24	M24
	M_2		mm	M10	M10	M12	M16	M16	M16	M16	M16
	n	h8	mm	12,7	12,7	12,7	30	30	30	30	30
	o_1	H7	mm	19.03	19.03	19.03	19.03	19.03	19.03	19.03	19.03
Number of "o1" cross grooves				3	4	5	6	9	10	12	16
Number of "m" threads				3	4	5	6	9	11	12	16

JBX

Manual jaw box
SMW-AUTOBLOK standard mounting dimensions

JBX-2G

Manual jaw box
with semi-finished body

High precision, resistance and power manual jaw box

- Accessory for face plates, 4 jaws independent manual or other chucks
- Internal or external clamping

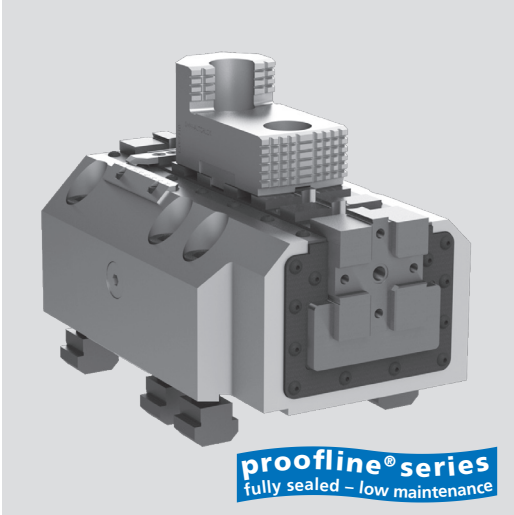

Application/customer benefits

- JBX: Standard mounting dimensions for SMW-AUTOBLOK chucks
- JBX-2G: Semifinished body and radial reference key to be adapted by customer
- Manual radial setting and clamping of large components on large plates or chuck
- Added to chucks there is more gripping force to apply a higher torque on the workpiece
- Added to chucks there are more contact points with the workpiece to better distribute the gripping force thus reducing distortion
- Very powerful and accurate clamping allowed by strong design
- Suitable for vertical machines thanks to the fully protected body
- Use of standard hard or soft jaw on top of the master jaw or special frontal jaws on the front side of the master jaw
- TONGUE & GROOVE master jaws (type "American Standard")

Technical features

- Manual gripping force applied by a strong and protected screw on a strong and rigid master jaw
- Manual and fine setting of master jaws for workpiece centering
- Protection from contamination with seals along the master jaw profiles
- Designed to work on SMW-AUTOBLOK large manual or power chucks or on special plates
- Body designed for better chip evacuation

Standard equipment

Manual jaws box
1 radial key
6 T-nuts and mounting screws (only JBX)

Ordering example

Qty. 1 / 2 / 3 / 4 manual jaw box JBX 300
Id. No. 77653003
Option: Actuation key Id. No. 11122700

Maximum protection

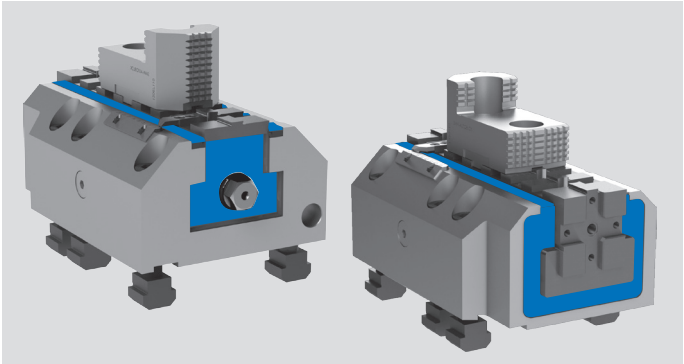

Master jaw protected on each side by steel profiles. Maximum protection from the penetration of chips, swarf, rubber and coolant allows less maintenance, working in bad environments and for a longer operative life.

Flexibility of use

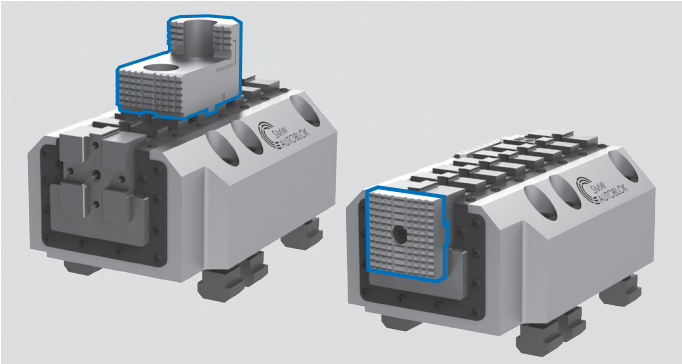

The jaw box can carry both standard or special, hard or soft jaws mounted on the upper side of the master jaw or special jaws mounted on the front side of the master jaw. The jaws on the front side allow optimal clamping in the same axis of the master jaws thus reducing deformation of the jaw and the jaw box. This allows a more rigid and accurate clamping. Also the frontal jaw option increases the flexibility allowing the customer to clamp the component in a very low area where it would be impossible to clamp with traditional jaws mounted on the upper side of the master jaw.

Technical data

SMW-AUTOBLOK Type Id. No.		JBX-2G 200 77652007	JBX 300 77653003	JBX-2G 300 77653009	JBX-2G 400 77654004
Jaw stroke (manual setting)	mm	50	50	50	100
Max. manual operating torque	Nm	160	200	200	400
Max. gripping force	kN	40	50	50	100
Weight (without top jaws)	kg	30	50	50	90
Hard top jaw (piece)*	Id. No.	12087111 13085300	12087111 13085300	12087111 13085300	12087111 13085300
Soft top jaw (piece)*	Id. No.	13045300	12044050	12044050	12044050
Soft top jaw long (piece)*	Id. No.	-	12045051	12045051	12045051
Soft top jaw for master jaw front side (piece)*	Id. No.	65653007	65653007	65653007	65653007

* The soft and tempered jaws are not in scope of delivery, the Id. No. are indicated in the table.

High precision, resistance and power manual jaw box

- Accessory for face plates, 4 jaws independent manual or other chucks
- Internal or external clamping

JBX-2G

Manual jaw box with semi-finished body

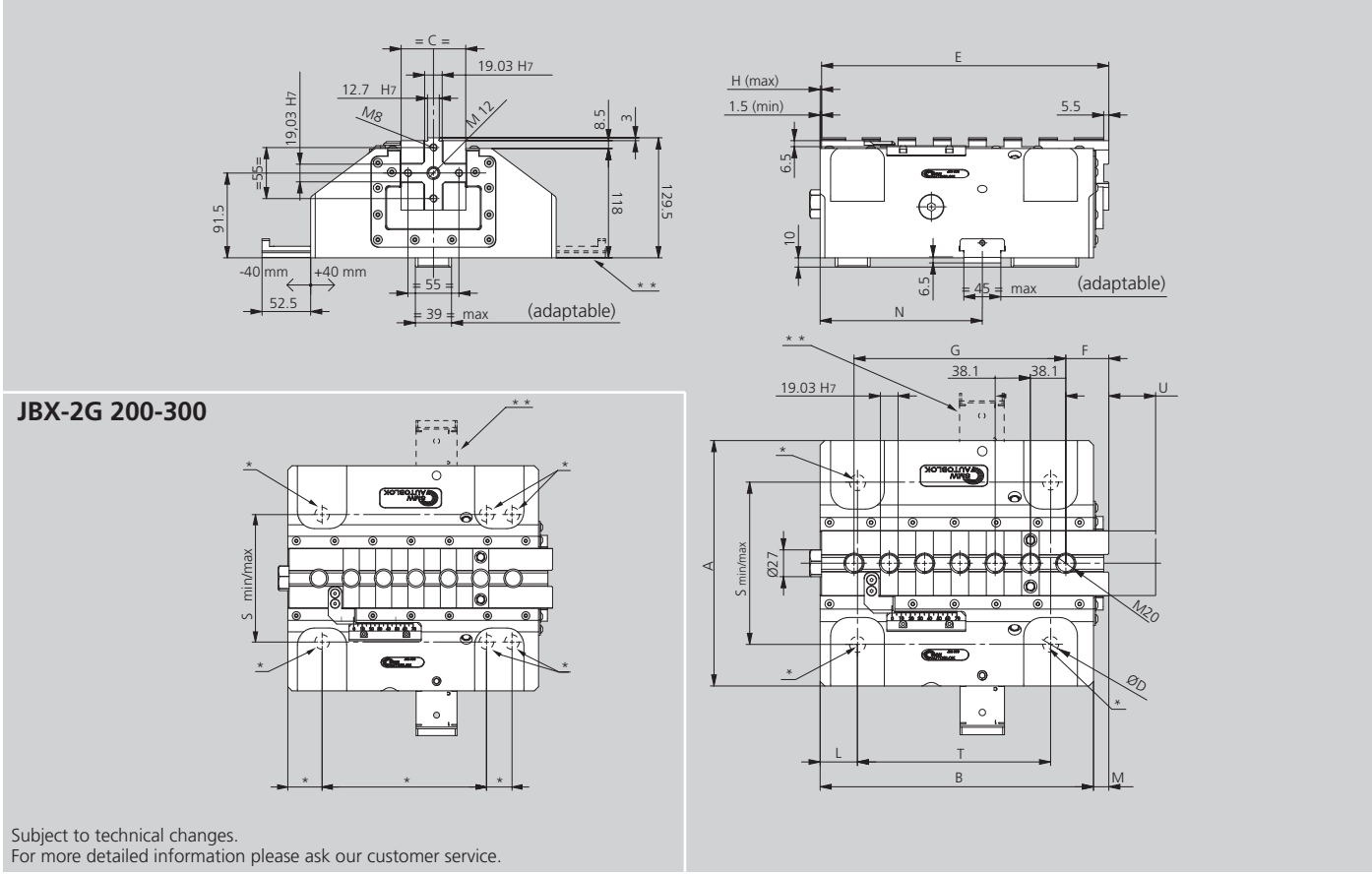

Subject to technical changes.
For more detailed information please ask our customer service.

SMW-AUTOBLOK Type		JBX-2G 200	JBX-2G 300	JBX-2G 400
A	mm	190	265	310
B	mm	225	295	380
C	mm	60	70	80
ØD min. / max.	mm	17-21	17-25	21-31
E	mm	235	310	395
F	mm	47,6	46.4	55.2
G	mm	152,4	228.6	304.8
H	mm	113	129,5	129.5
H1	mm	101,5	118	118
H2	mm	80	91,5	91,5
L	mm	32,5	40	57.5
J	mm	45	55	55
J1	mm	45	55	55
K	mm	19	27	27
M	mm	10	16.5	16.5
N	mm	87,5	175	225
P min. / max.	mm	0 / 50	1,5 / 51.5	1,5 / 101.5
R	mm	30	39	45
R1	mm	45	40	45
S Screws M16-M20 min. *	mm	120-125	150	-
S Screws M16-M20 max. *	mm	164-157	230	-
S M20-M24 nuts min. *	mm	-	165-175	210
S M20-M24 nuts max. *	mm	-	220	260
S M30 nuts min. *	mm	-	-	220
S M30 nuts max. *	mm	-	-	260
T	mm	208.5	208.5	250
U stroke	mm	50	50	100
V	mm	8	10	10
V1	mm	7	5,5	5,5

* All these elements have to be worked according to the needs of the customer. Before making the modifications, we suggest to request the jaw box 2D or 3D drawing. Note that the minimum screws size must be M16.

** In case of interference, the radial reference key can be mounted on the other side.

JBX

Manual jaw box
SMW-AUTOBLOK standard mounting dimensions

JBX-2G

Manual jaw box
with semi-finished body

High precision, resistance and power manual jaw box

- Accessory for face plates, 4-jaw independent manual or other chucks
- Internal or external clamping

JBX 300

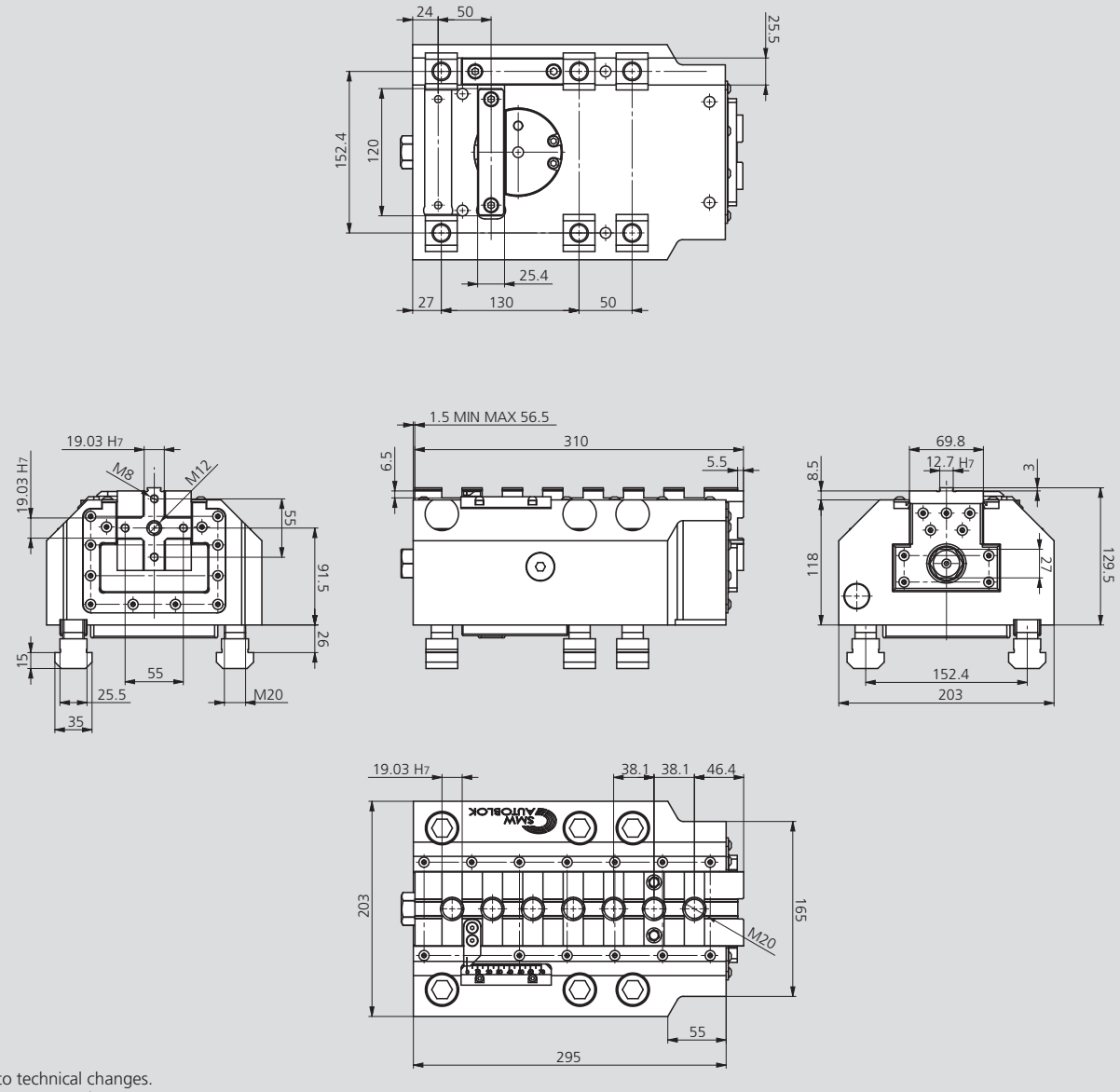

Subject to technical changes.
For more detailed information please ask our customer service.

Optional 5:1 torque multiplier for JBX and JBX-2G

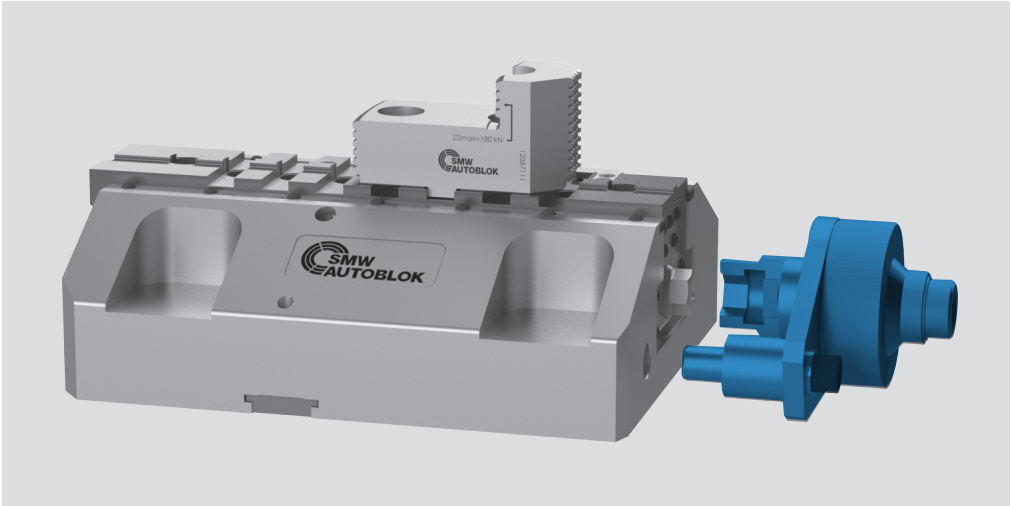

Torque multiplier
Id. No. 13506320

- Transmission 5:1
- Easy operation
- For fast achievement of maximum gripping force

Notes

CENTCO4-MLW

4-JAW MANUAL CHUCK

In the beginning the jaw pairs **Z1** and **Z2** only apply a centering force that is necessary to center the workpiece. Only if both jaw pairs **Z1** and **Z2** are in contact with the workpiece, the clamping force necessary for machining is applied.

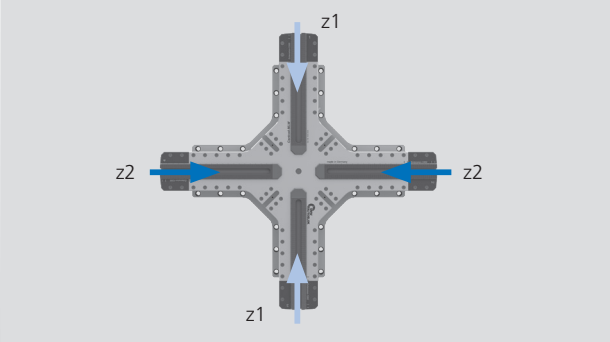

2+2 self centering + compensating clamping

of round,

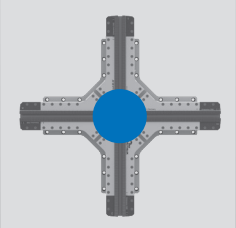

thin-walled,

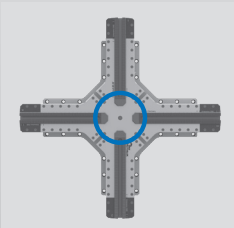

iregular shaped and

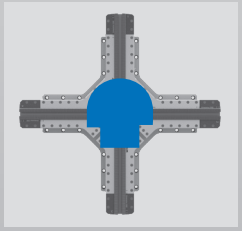

square / rectangular workpieces

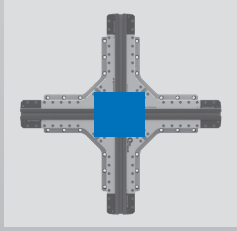

Examples for workpieces

POSSIBLE COST SAVINGS
calculation example

3-jaw chuck standard jaw chuck	€/set	Centco4-MLW	€/set
1x Special jaws	1.500,-€	1x Standard jaws	500,-€
1x Standard jaws	375,-€	1x Standard jaws	500,-€
1x Special jaws	1.750,-€	1x Standard jaws	500,-€
1x Special jaws	2.000,-€	1x Standard jaws	500,-€
Total at 1 set of jaws respectively	**5.625,-€**	**Total** at 1 set of jaws respectively	**2000,-€**
Cost savings at 1 set of jaws	**0 €**	**Cost savings** at 1 set of jaws	**3.625,-€**

Weight-optimised chuck body
with recesses for best accessibility

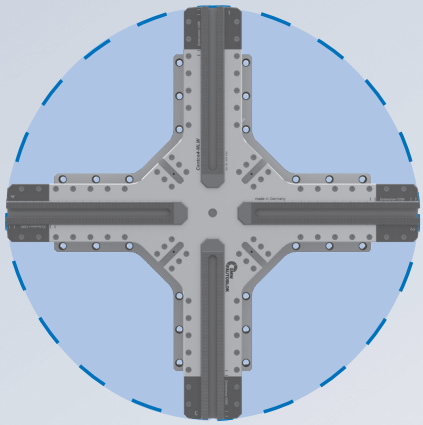

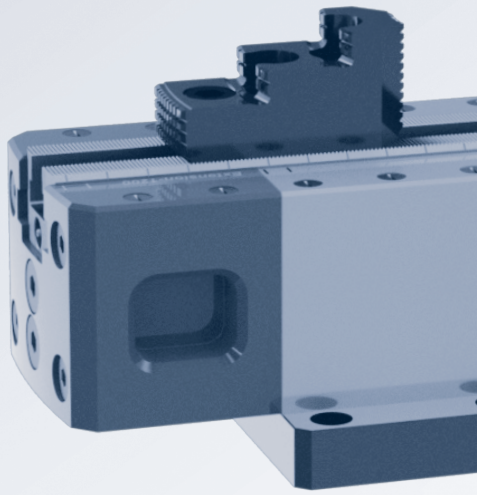

Direct pressure lubrication system

Clamping glossary

2+2 self centering-compensating clamping: Work pieces need to be centered when clamping. When using 3 jaw chucks, this is carried out via a mechanical synchronizing of the 3 jaws to one common center. A self centering 4 jaw chuck which is used for different work piece geometries is creating 2 separate centers via the 2 opposed jaw sets. The mechanical synchronizing is causing a redundant positioning, which affects the clamping negatively.

The **Centco4-MLW** with its 2+2 self centering-compensating clamping centers the work piece with 2 independent axes. The self centering 2 axes work independent from each other, and thus can reach one common center. This works with any work piece geometry or tolerance. The grip force is only built up, after both jaw axes have reached their common center. This guaranties a very sensitive and high accurate clamping at any grip force and best machining results.

Weight optimized chuck body: The outer geometry of the chuck body has recesses between the base jaws. This improves the radial accessibility with live tools and reduces the inertia and weight. The machine can accelerate and decelerate quicker and more energy efficient, and the machine spindle can carry higher work piece weights.

Centrifugal compensation: The rotation of a chuck results in centrifugal forces that act onto the master jaws and the top jaws. It reduces the Static grip force, and thus reduces the dynamic chip removal. The centrifugal force system of the **Centco4 MLW** reduces this effect, and thus improves the dynamic chip removal, the safety and the roundness of the work pieces.

Direct pressure lubrication system: In a pressure lubrication system all loaded areas are directly lubricated via direct channels. Used lubricant is directly replaced by new lubricant. Compared to open lubrication systems it reduced the amount of lubricant needed, increases the lubrication intervals and avoids tribo corrosion.

Centrifugal force compensation for highest speeds

2+2 self centering and compensating clamping

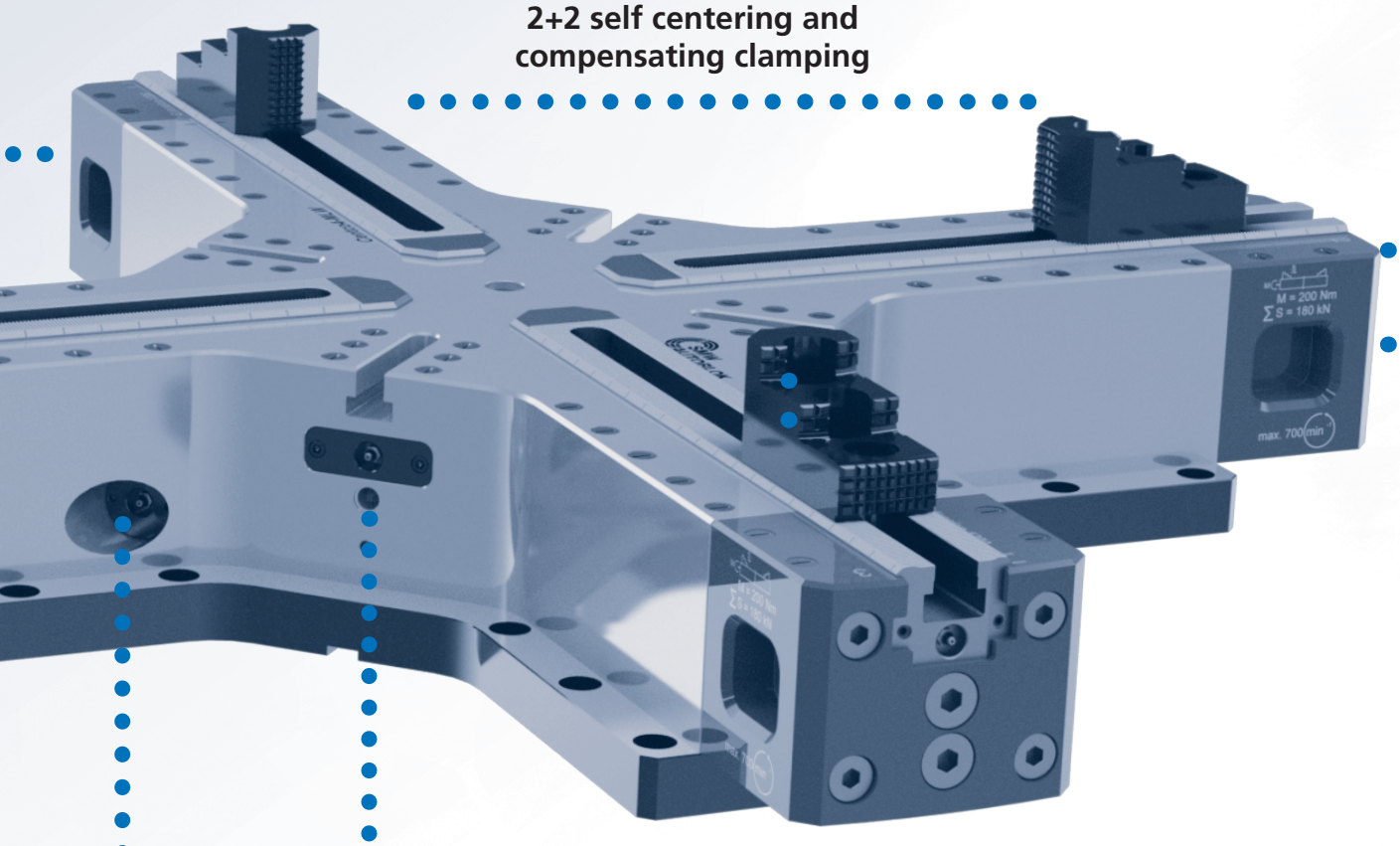

Serration **Inch**

Actuation by **central drive**

Centco4-MLW-D

INCH
SERRATION

4-jaw manual chuck

- 2+2 self centering
- Independent self centering clamping in 2 axis
- Weight-optimized chuck body

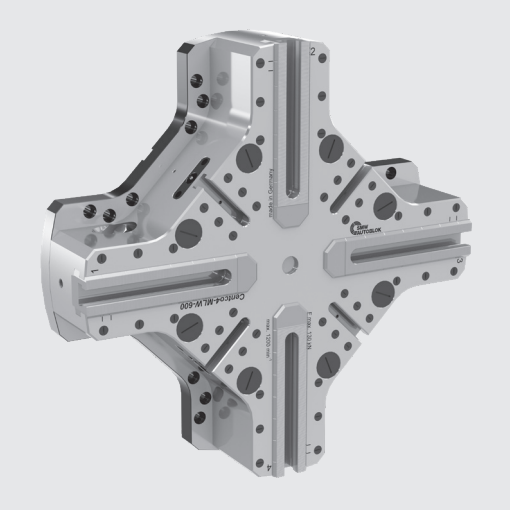

Application/customer benefits

- Independent self centering clamping in 2 axis via 1 central, manual actuating mechanism
- Mechanical centering of the workpiece
- Clamping of every workpiece geometry possible
- Weight-optimized chuck body
- Less workpiece deformation compared to 3-jaw chucks
- Long lifetime due to case hardened parts
- Large range of standard top jaws
- Suitable for OD and ID clamping
- Fixed jaw for stationary processing

Technical features

- Centrifugal force compensation
- Optimized lubrication system

Standard equipment

4-jaw manual chuck,
8 pieces T-nuts and bolts
Actuation wrench

Ordering example

Centco4-MLW-D-600-4

Function / Application examples

2+2 self centering and compensating clamping*

In the beginning the jaw pairs **Z1** + **Z2** only apply a centering force that is necessary to center the workpiece. Only if both jaw pairs **Z1** and **Z2** are in contact with the workpiece, the clamping force necessary for machining is applied.

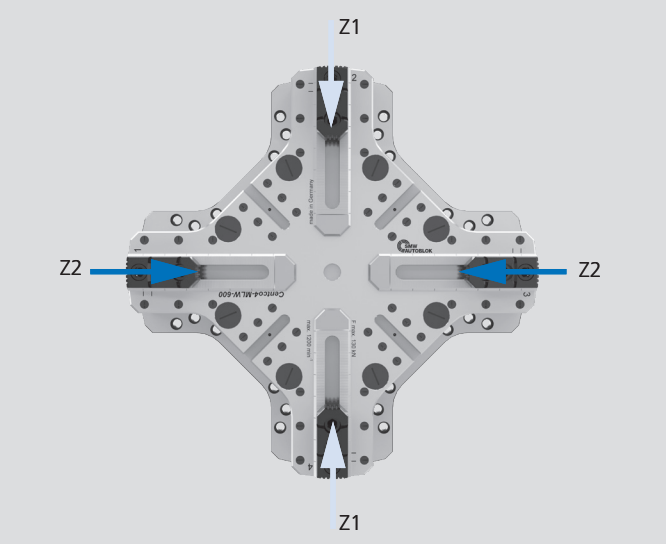

2+2 self centering clamping of round or thin-walled workpieces

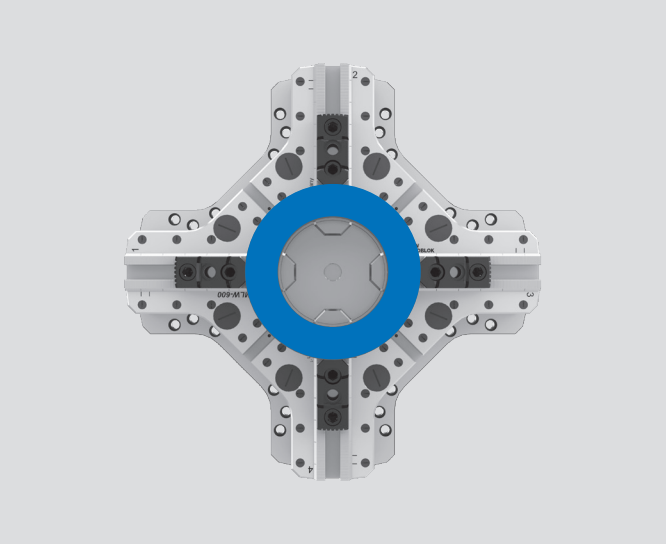

2+2 self centering and compensating clamping of rectangular or square workpieces

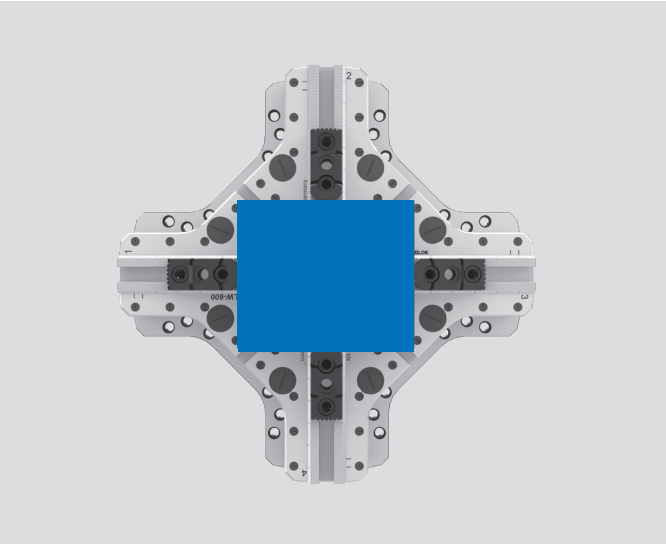

2+2 self centering and compensating clamping of unshaped workpieces

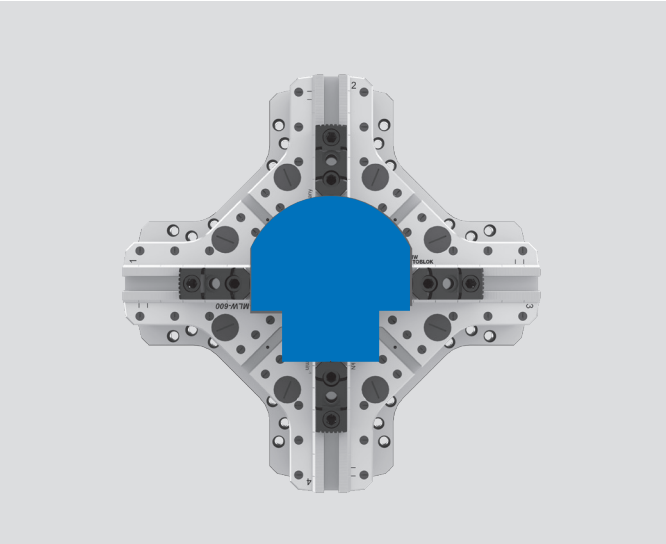

* **Z1**: Self centering clamping axis 1 / **Z2**: self centering clamping axis 2
Z1 is compensating to **Z2**

4-jaw manual chuck Ø 315 mm

- 2+2 self centering
- Independent self centering clamping in 2 axis
- Weight-optimized chuck body

Centco4-MLW-D

INCH SERRATION

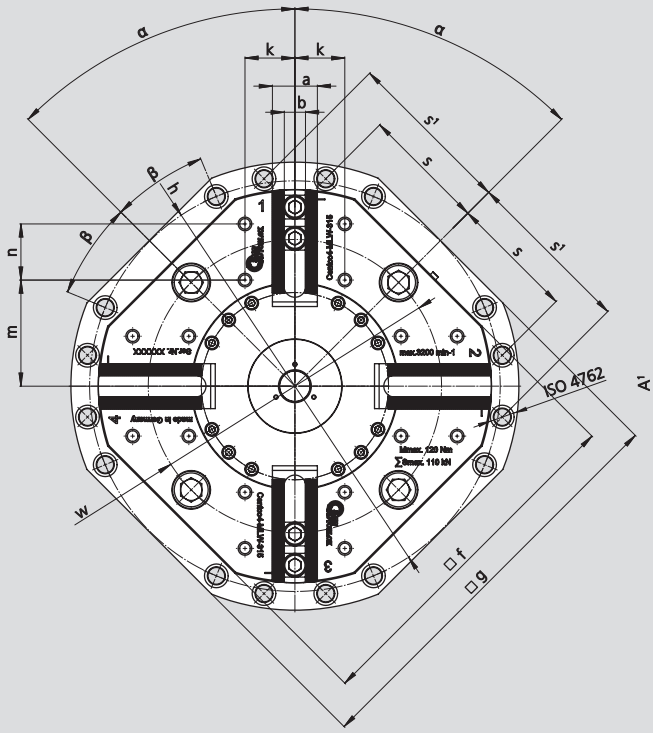

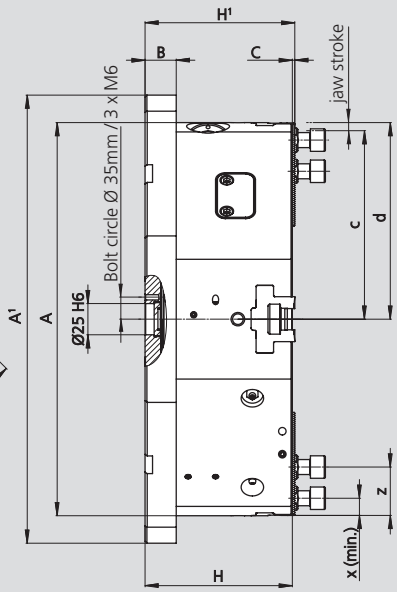

Side view Id.Nr. 163710

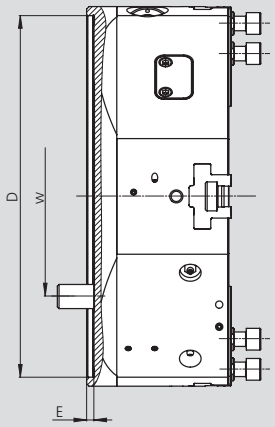

Front view Id.Nr. 163710

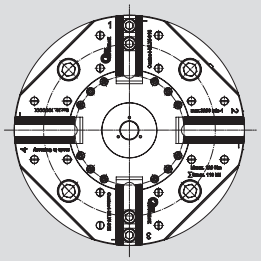

Subject to technical changes. For more detailed information please ask our customer service.

SMW-AUTOBLOK Type Centco4-MLW-D Id. No.				315-4 163780	315-4-Z300 163710
Outside diameter		**A**	mm	315	315
Outside diameter base plate		**A¹**	mm	359	-
Base plate height		**B**	mm	25	-
		C	mm	2	2
Mounting	H6	**D**	mm	-	300
		E	mm	-	6
Chuck height		**H**	mm	118	118
		H1	mm	120	120
Jaw width		**a**	mm	36	36
Slot width	H8	**b**	mm	17	17
Min.		**c**	mm	151	151
Max.		**d**	mm	157.5	157.5
Bolt ISO4762-12.9		**e**	mm	M12	M12
		f	mm	280	280
		g	mm	330	-
		h	mm	164.5	-
		k	mm	40	40
		m	mm	85	85
		n	mm	45	45
		s/s¹	mm	63 / 100	-
		w	mm	235 / 4 x 90°	235 / 4 x 90°
Min.		**x**	mm	6	6
Min. / max.		**z**	mm	25 / 73.5	25 / 73.5
		α	mm	45	-
		β	deg.	22.5	-
Serration			inch	1/16" x 90°	1/16" x 90°
Max. speed			min^{-1}	3200	3200
Max. total clamping force			kN	110	110
At max. actuating torque (Md)			Nm	120	120
Stroke per jaw			mm	6.5	6.5
Compensation stroke per jaw			mm	5	5
Weight (without jaws)			kg	59.4	53.5
Moment of inertia			$kg \cdot m^2$	0.76	0.65

Centco4-MLW-D

INCH
SERRATION

4-jaw manual chuck Ø 400 mm

- 2+2 self centering
- Independent self centering clamping in 2 axis
- Weight-optimized chuck body

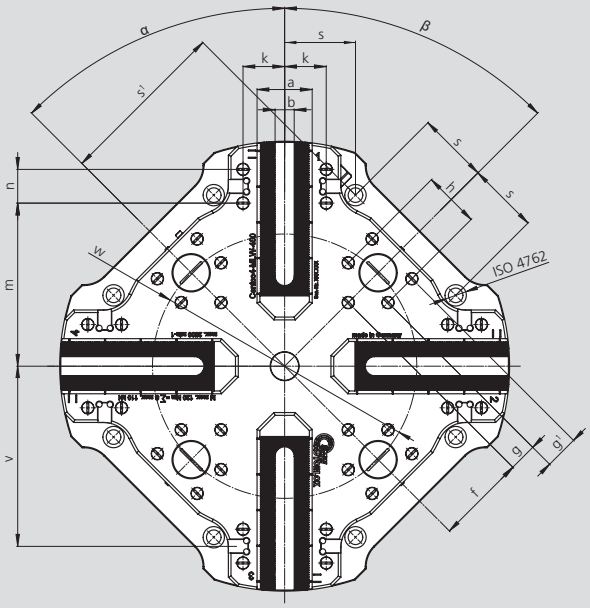

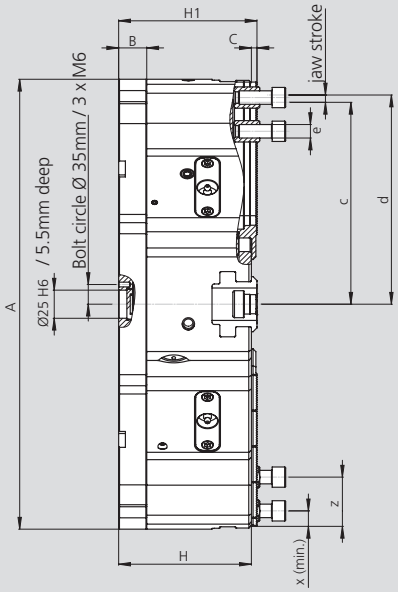

Side view Id.Nr. 163306

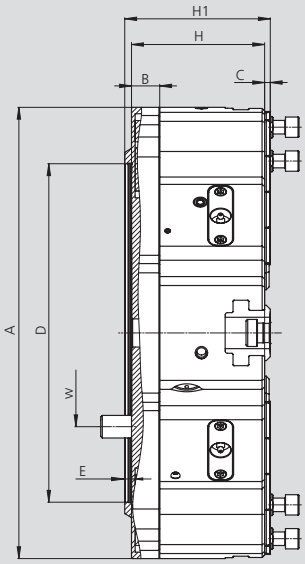

Front view Id.Nr. 163306

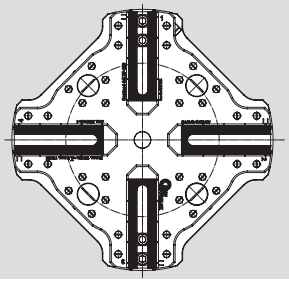

Subject to technical changes. For more detailed information please ask our customer service.

SMW-AUTOBLOK Type Centco4-MLW-D Id. No.				400-4 163180	400-4-Z300 163306
Outside diameter		**A**	mm	400	400
Base plate height		**B**	mm	25	25
		C	mm	5	5
Mounting	H6	**D**	mm	-	300
		E	mm	-	6
Chuck height		**H**	mm	118	118
		H1	mm	123	129
Jaw width		**a**	mm	49	49
Slot width	H8	**b**	mm	17	17
Min.		**c**	mm	179.5	179.5
Max.		**d**	mm	186	186
Bolt ISO4762-12.9		**e**	mm	M12	M12
		f	mm	80	80
		g	mm	25	25
		g¹	mm	30	30
		h	mm	50	50
		k	mm	37	37
		m	mm	145	145
		n	mm	30	30
		s/s¹	mm	63 / 152.1	-
		v1	mm	160	160
		w	mm	235	235
Min.		**x**	mm	6	6
Min. / max.		**z**	mm	25 / 115	25 / 115
		α	deg.	45	45
		β	deg.	45	45
Serration			inch	1/16" x 90°	1/16" x 90°
Max. speed			min^{-1}	2500	2500
Max. total clamping force			kN	110	110
At max. actuating torque (Md)			Nm	120	120
Stroke per jaw			mm	6.5	6.5
Compensation stroke per jaw			mm	5	5
Weight (without jaws)			kg	77	77
Moment of inertia			$kg \cdot m^2$	1.3	1.3

4-jaw manual chuck Ø 600 - 750 mm

- 2+2 self centering
- Independent self centering clamping in 2 axis
- Weight-optimized chuck body

Centco4-MLW-D

INCH
SERRATION

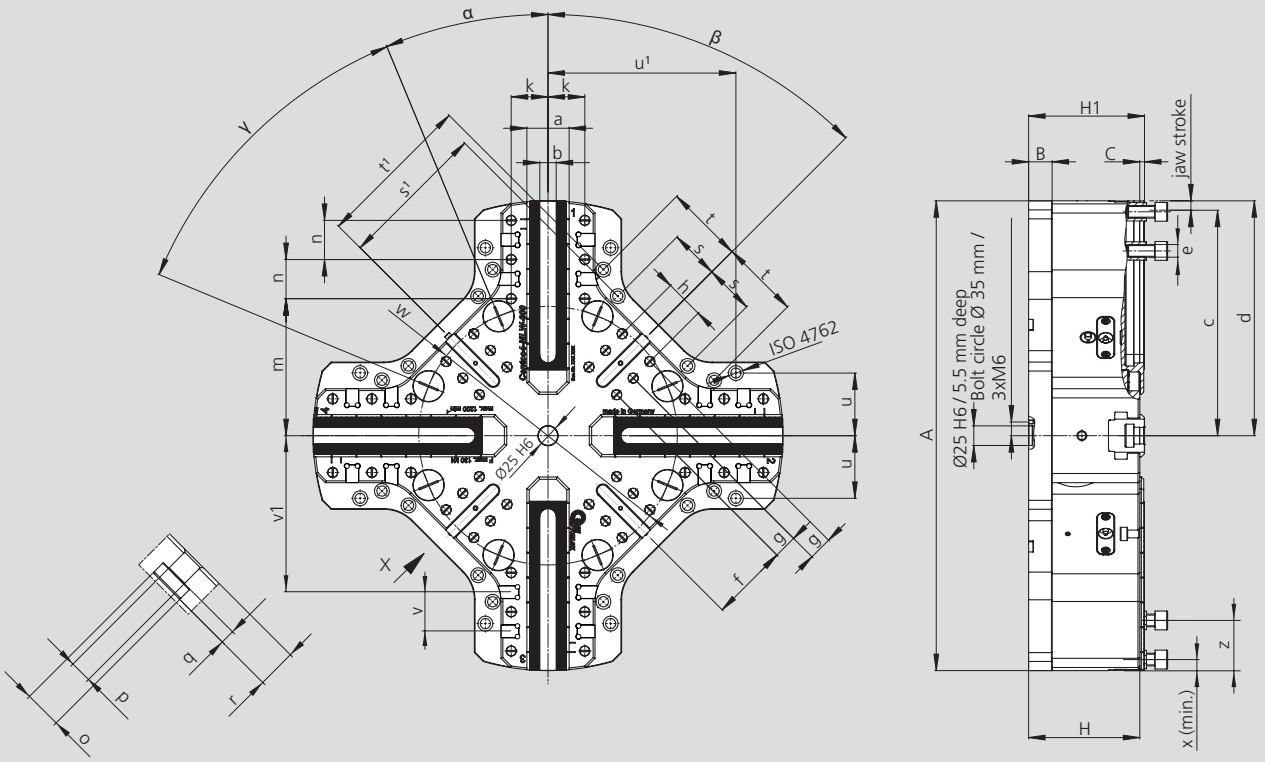

Subject to technical changes. For more detailed information please ask our customer service.

SMW-AUTOBLOK Type Centco4-MLW-D Id. No.			600-4 163210	750-4 163240
Outside diameter	**A**	mm	600	750
Base plate height	**B**	mm	30	30
	C	mm	6	6
Chuck height	**H**	mm	142	142
	H1	mm	148	148
Jaw width	**a**	mm	54	54
Slot width H8	**b**	mm	21	21
Jaw position min.	**c**	mm	288	363
Jaw position max.	**d**	mm	300	375
Bolt ISO4762-12.9	**e**	mm	M16	M16
	f	mm	99	99
	g	mm	2 x 30	2 x 30
	h	mm	50	50
	k	mm	47	47
	m	mm	175	200
	n	mm	2 x 50	3 x 50
T-slot width	**o**	mm	24	24
T-slot width	**p**	mm	14	14
Height of width **o**	**q**	mm	9.2	9.2
Total depth T-slot	**r**	mm	25	25
	s/s¹	mm	63 / 189	63 / 189
	t/t¹	mm	100 / 200	100 / 200
	u/u¹	mm	80 / 240	80 / 240
	v	mm	50	50
	v1	mm	200	225
	w	mm	330.2	330.2
Min.	**x**	mm	12.5	12.5
Min. / max.	**z**	mm	25 / 177	25 / 245
	α	deg.	17.5	17.5
	β	deg.	45	45
	γ	deg.	45	45
Serration		inch	1/16“x 90°	1/16“x 90°
Max. speed		min^{-1}	1200	1000
Max. total clamping force		kN	130	130
at max. actuating torque (Md)		Nm	200	200
Stroke per jaw		mm	12	12
Compensation stroke per jaw		mm	10	10
Weight (without jaws)		kg	165	201
Moment of inertia		$kg{\cdot}m^2$	5.5	9.83

Centco4-MLW-D

INCH
SERRATION

4-jaw manual chuck Ø 1000 - 1400 mm

- 2+2 self centering
- Independent self centering clamping in 2 axis
- Weight-optimized chuck body

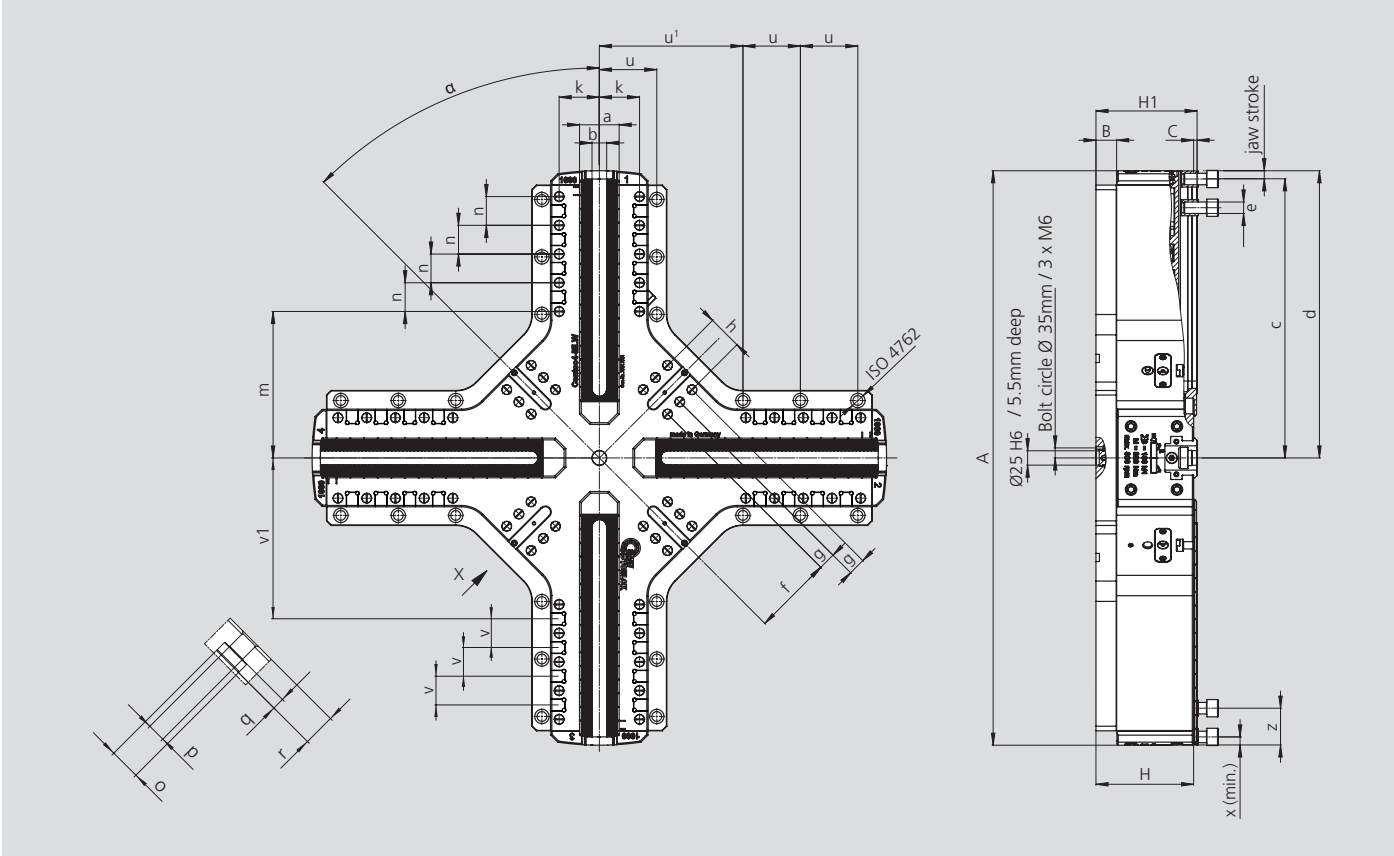

Subject to technical changes. For more detailed information please ask our customer service.

SMW-AUTOBLOK Type Centco4-MLW-D Id. No.			1000-4 163270	1200-4 163470	1400-4 163520
Outside diameter	**A**	mm	1000	1200	1400
Base plate height	**B**	mm	36	36	36
	C	mm	6	6	6
Chuck height	**H**	mm	170	170	170
	H1	mm	176	176	176
Jaw width	**a**	mm	69	69	69
Slot width	H8 **b**	mm	25.5	25.5	25.5
Min.	**c**	mm	486	586	686
Max.	**d**	mm	500	600	700
Bolt ISO4762-12.9	**e**	mm	M20	M20	M20
	f	mm	138	138	138
	g	mm	2 x 30	2 x 30	2 x 30
	h	mm	60	60	60
	k	mm	70	70	70
	m	mm	255	255	255
	n	mm	4 x 50	6 x 50	8 x 50
T-slot width	**o**	mm	30	30	30
T-slot width	**p**	mm	18	18	18
Height of width **o**	**q**	mm	12.2	12.2	12.2
Total depth T-slot	**r**	mm	30	30	30
	u/u¹	mm	100 / 250	100 / 250	100 / 250
	v	mm	50	50	50
	v1	mm	280	280	280
Min.	**x**	mm	14	14	14
Min. / max.	**z**	mm	50 / 350	50 / 450	50 / 550
	α	deg.	45	45	45
Serration		inch	3/32"x 90°	3/32"x 90°	3/32"x 90°
Max. speed		min^{-1}	800	700	600
Max. total clamping force		kN	180	180	180
at max. actuating torque (Md)		Nm	320	320	320
Stroke per jaw		mm	14	14	14
Compensation stroke per jaw		mm	12	12	12
Weight (without jaws)		kg	410	480	530
Moment of inertia		$kg{\cdot}m^2$	36.4	55.6	80

Centco4-MLW-D

INCH
SERRATION

Ordering review

SMW-AUTOBLOK Type Centco4-MLW-D	315-4		400-4		600-4	750-4	1000-4	1200-4	1400-4
Mounting		Z300		Z300					
Id. No.	163780	163710	163180	163306	163210	163240	163270	163470	163520

Equipment review

SMW-AUTOBLOK - Assembling tool	315-4	400-4	600-4	750-4	1000-4	1200-4	1400-4
Id. No.	210861		210860				

Jaws

MHB-D (INCH SERRATION)
Hard, reversible stepped top jaws

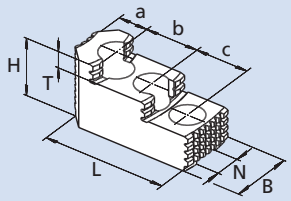

Centco4-MLW-D	315-4	400-4	600-4	750-4	1000-4	1200-4	1400-4
Jaw type	MHB-D 200	MHB-D 200	MHB-D 251	MHB-D 251	MHB-D 500	MHB-D 500	MHB-D 500
Id. No.	12082038	12082038	12083038	12083038	12084548	12084548	12084548
Serration	1/16" x 90°	1/16" x 90°	1/16" x 90°	1/16" x 90°	3/32" x 90°	3/32" x 90°	3/32" x 90°
B	40	40	45	45	60	60	60
H	45	45	56	56	75	75	75
L	82	82	106.2	106.2	140.8	140.8	140.8
T	10.5	10.5	13.5	13.5	19	19	19
N	17	17	21	21	25.5	25.5	25.5
a	19	19	26	26	38	38	38
b	23	23	30	30	38	38	38
c	23	23	30	30	38	38	38
kg / set	2.3	2.3	2.9	2.9	9.5	9.5	9.5

MWB-D (INCH SERRATION)
Soft top jaws
Tall version

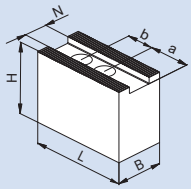

Centco4-MLW-D	315-4	400-4	600-4	750-4	1000-4	1200-4	1400-4
Jaw type	MWB-D 200	MWB-D 200	MWB-D 250	MWB-D 250	MWB-D 400	MWB-D 400	MWB-D 400
Id. No.	5318837	5318837	5319680	5319680	5319831	5319831	5319831
Serration	1/16" x 90°	1/16" x 90°	1/16" x 90°	1/16" x 90°	3/32" x 90°	3/32" x 90°	3/32" x 90°
B	40	40	50	50	60	60	60
H	60	60	80	80	90	90	90
L	90	90	120	120	170	170	170
N	17	17	21	21	25.5	25.5	25.5
a	43	43	62	62	90	90	90
b	22	22	28	28	35	35	35
kg / set	4.1	4.1	9.2	9.2	21.6	21.6	21.6

AWB-D (INCH SERRATION)
Soft top jaws
Low version

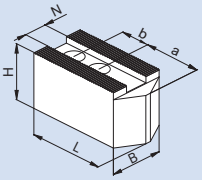

Centco4-MLW-D	315-4	400-4	600-4	750-4	1000-4	1200-4	1400-4
Jaw type	AWB-D 200	AWB-D 200	AWB-D 250	AWB-D 250	AWB-D 400	AWB-D 400	AWB-D 400
Id. No.	5318838	5318838	5319681	5319681	5319834	5319834	5319834
Serration	1/16" x 90°	1/16" x 90°	1/16" x 90°	1/16" x 90°	3/32" x 90°	3/32" x 90°	3/32" x 90°
B	40	40	50	50	60	60	60
H	40	40	50	50	60	60	60
L	110	110	120	120	170	170	170
N	17	17	21	21	25.5	25.5	25.5
a	53	53	70	70	115	115	115
b	22	22	28	28	35	35	35
kg / set	2.7	2.7	5.4	5.4	14.5	14.5	14.5

SBS-D (INCH SERRATION)
Soft pie jaws

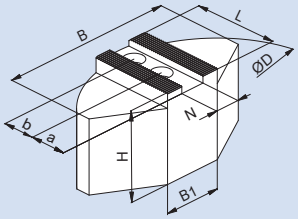

Centco4-MLW-D	315-4	400-4	600-4	750-4	1000-4	1200-4	1400-4
Jaw type	SBS-D 200	SBS-D 200	SBS-D 600/4	SBS-D 600/4	SBS-D 1200/4	SBS-D 1200/4	SBS-D 1200/4
Id. No.	5318839	5318839	5322250	5322250	5322251	5322251	5322251
Serration	1/16" x 90°	1/16" x 90°	1/16" x 90°	1/16" x 90°	3/32" x 90°	3/32" x 90°	3/32" x 90°
B	140	140	330	330	500	500	500
B1	64	64	50	50	60	60	60
D	200	200	190	190	445	445	445
H	60	60	85	85	85	85	85
L	70	70	140	140	155	155	155
N	17	17	21	21	25.5	25.5	25.5
a	35	35	75	75	85	85	85
b	22	22	29	29	35	35	35
kg / set	10.3	10.3	56.3	56.3	85.6	85.6	85.6

SBA-D (INCH SERRATION)
Soft pie jaws aluminum light version

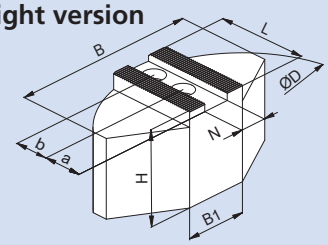

Centco4-MLW-D	315-4	400-4	600-4	750-4	1000-4	1200-4	1400-4
Jaw type	SBA-D 200	SBA-D 200	SBS-A 600/4	SBS-A 600/4	SBA-D 1200/4	SBA-D 1200/4	SBA-D 1200/4
Id. No.	5318840	5318840	5322254	5322254	5322255	5322255	5322255
Serration	1/16" x 90°	1/16" x 90°	1/16" x 90°	1/16" x 90°	3/32" x 90°	3/32" x 90°	3/32" x 90°
B	120	120	330	330	500	500	500
B1	40	40	50	50	60	60	60
D	200	200	190	190	445	445	445
H	58	58	85	85	85	85	85
L	72.5	72.5	140	140	155	155	155
N	17	17	21	21	25.5	25.5	25.5
a	35	35	75	75	85	85	85
b	22	22	29	29	35	35	35
kg / set	3.7	3.7	20.1	20.1	30.3	30.3	30.3

* SMW-AUTOBLOK is recommending not to clamp any diameters, that are larger than the chuck O.D.
For more detailed information please ask our customer service.

SMW-AUTOBLOK Jaws-catalog
Request or download:
www.smw-autoblok.de

Centco4-MLW-D

INCH
SERRATION

■ Jaws
■ Clamping ranges

MHB-D (INCH SERRATION)
Hard, reversible stepped top jaws

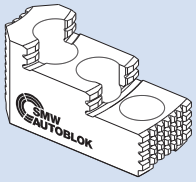

Clamping ranges

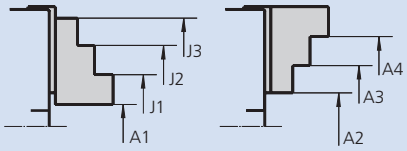

Centco4-MLW-D	315	400	600	750	1000	1200	1400
Jaw type	MHB-D200	MHB-D200	MHB-D200	MHB-D200	MHB-D500	MHB-D500	MHB-D500
Id. No.	12082038	12082038	12083038	12083038	12084548	12084548	12084548
A1	73-216	74-299	87-458	101-609	96.5-814	96.5-1014	96.5-1214
A2	-	-	-	-	-	-	-
A3	124-266	124.5-321	178-550	236-698.5	221.5-938.5	221.5-1138.5	221.5-1338.5
A4	199-315	200-397.5	263-600	321-750*	320.5-1000*	320.5-1200*	320.5-1400*
J1	121-262	122-346	140.5-512	155-662	182.5-897	182.5-1097	182.5-1297
J2	195-315	196-400*	224.5-598	239-747.5	279.5-996	279.5-1196	279.5-1396
J3	237-315	238-400*	296.4-600*	311-750*	377-1000*	377-1200*	377-1400*

Note: min. 1 mm Residual jaw stroke
min. 1 mm Clamping stroke
* Not larger than chuck OD

GG-D (INCH SERRATION)
Hard roughing jaws

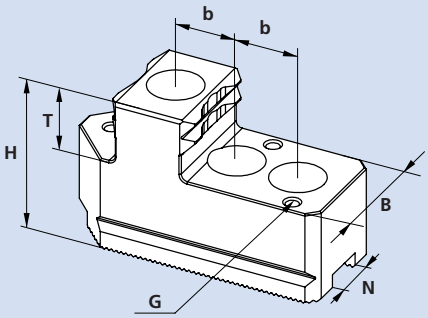

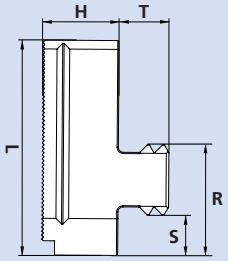

Type	Id. No.	External clamping*	Internal clamping*	B	H	L	R	S	T	G	N	b	Serration	kg / Set	SMW-AUTOBLOK Chuck
GG-D 260	**5325560**	76 -314	128 - 315	36	55	100	52	11	20	M5	17	25	1/16"x90°	3.364	Centco4-MLW 315-4
GG-D 315	**5325562**	59 - 391	155 - 400	40	55	110	65	17	20	M8	17	25	1/16"x90°	4.184	Centco4-MLW 400-4
GG-D 400	**5325564**	94 - 582	194 - 600	50	60	130	64	13	22	M8	21	32,5	1/16"x90°	6.8524	Centco4-MLW 600-4
GG-D 400	**5325564**	100 - 731	200 - 750	50	60	130	64	13	22	M8	21	32,5	1/16"x90°	6.8524	Centco4-MLW 750-4
GG-D 500	**5325565**	124 - 986	239 - 1000	60	60	150	73	14,5	22	M8	25.5	40	3/32"	9.04	Centco4-MLW 1000-4
GG-D 630	**5325566**	95 - 1190	231 - 1200	60	60	180	83	13	22	M8	25.5	50	3/32"	11.492	Centco4-MLW 1200-4
GG-D 630	**5325566**	95 - 1390	231 - 1400	60	60	180	83	13	22	M8	25.5	50	3/32"	11.492	Centco4-MLW 1400-4

* Attention: The values are calculated theoretical values. SMW-AUTOBLOK is recommending not to clamp any diameters, that are larger than the chuck O.D.
If you have any questions, please do not hesitate to contact our customer service.

Centco4-MLW-D

INCH
SERRATION

NST T-Nuts suitable for Centco4-MLW-D

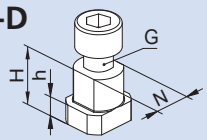

Centco4-MLW-D	315-4	400-4	600-4	750-4	1000-4	1200-4	1400-4
T-nut type	NST17	NST17	NST21	NST21	NST25	NST25	NST25
Id. No.	016021	016021	014788	014788	014812	014812	014812
N	17	17	21	21	25.5	25.5	25.5
H	23	23	27	27	29	29	29
h	9	9	10	10	11	11	11
Cyl.-screw ISO 4762-12.9 G	M12 x 30	M12 x 30	M16 x 35	M16 x 35	M20 x 40	M20 x 40	M20 x 40
Torque Md max. (Nm) *	70	70	150	150	250	250	250

Jaw pre-positioning fixture

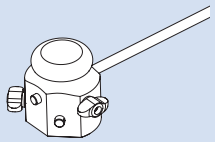

Centco4-MLW	315-4	400-4	600-4	750-4	1000-4	1200-4	1400-4
Id. No.	163518	163518	163514	163514	163515	163516	163517

Center pin

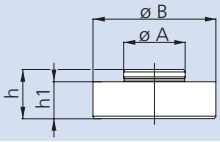

Centco4-MLW	315-4	400-4	600-4	750-4	1000-4	1200-4	1400-4
Id. No.	163239						
Ø A	25 h6						
Ø B	50 g6						
h	20						
h1	15						

Slot-nuts

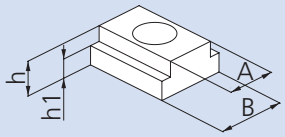

Id.-No.	209210	209194	209173
A	12	14	16
B	20	20	20
h	10	10	10
h1	5.5	5.5	5.5
Id. No. Cyl.-screw (not included)	010166	010166	010166

ALB

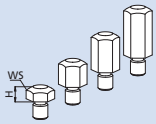

H [mm]	SW17 / M10	SW19 / M12	SW24 / M16
10	210605	210058	210064
15	210606	210060	210065
20	210607	210061	210066
25	210608	210062	210067
30	210609	210063	210068

Important for maintenance and safe operation, to be ordered with the chuck

Grease K67

Special grease for manual and power chucks

Cartridge 14 Oz. (DIN 1284)
Grease content 500g
Id. No. 10731223

Can 1000 g
Id. No. 10731224

- High adhesion
- High resistance against coolant
- High load bearing capacity
- Low friction coefficient
- Avoids tribocorrosion

Grease gun

Grease gun (DIN 1283) for cartridges 14 Oz. (DIN 1284)

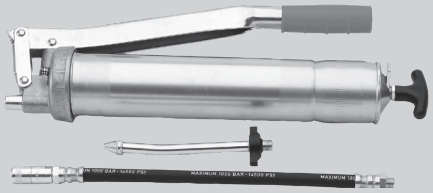

Lubrication set Id. No. 083726
Supply range
- Grease gun
- 1 Adapter flexible for high pressure grease nipple
- 1 Adapter for cone grease nipple

Centco4-MLW-D

INCH
SERRATION

- Fixed jaws
- Weight-optimized chuck body

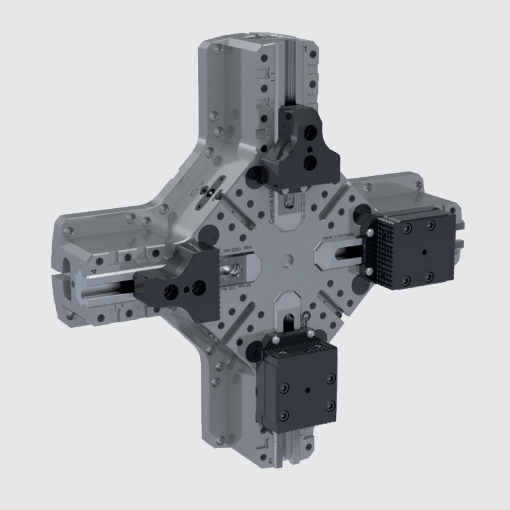

Application/customer benefits

- Capture clamping, clamping against fixed jaw
- Vise-clamping
- Variable positioning of the fixed jaw
- Very large clamping range for maximum flexibility
- Can be used with SinterGrip clamping inserts for minimum clamping depths without prepping of part
- Ideal for OP10 and OP20

Centco4-MLW-D with fixed jaw suitable for stationary use only.
The operating torque decreases depending on the number of fixed and moving jaws used.

Application examples:

Capture clamping:
1 fixed top jaw + 1 movable top jaw

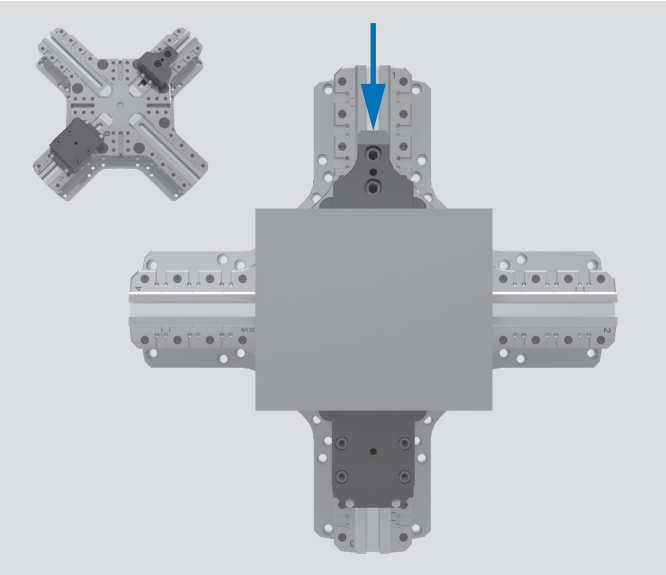

Capture clamping:
2 fixed top jaws + 2 movable top jaws

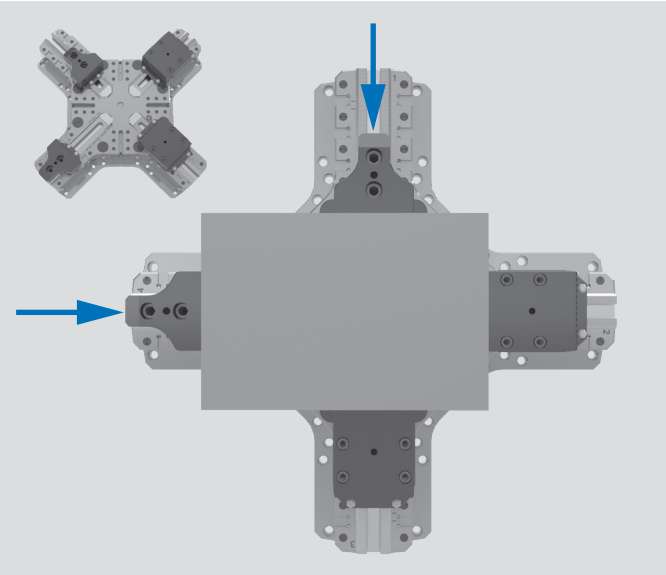

Capture clamping:
1 fixed top jaw + 3 movable top jaws

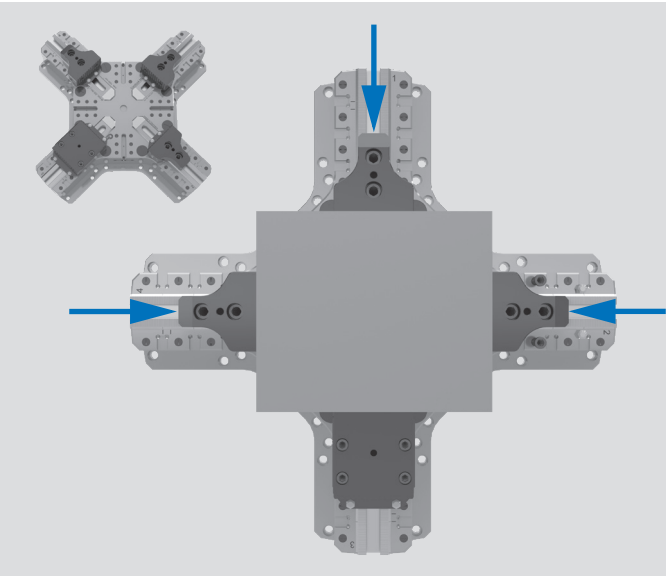

Chuck clamping:
4 movable top jaws

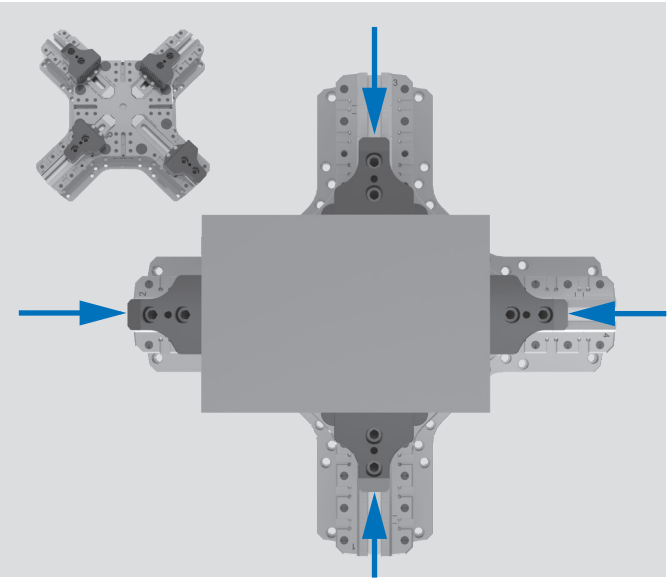

Centco4-MLW-D

INCH
SERRATION

■ Jaws*

Movable top jaw

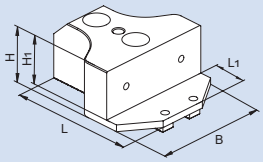

Centco4-MLW-D	400-4	600-4	750-4	1000-4	1200-4	1400-4
Id. No.	5325943	5325923		5325955		
B	100	120		160		
H	57	57		57		
H1	50	50		50		
L	110	147		167		
L1	37	37		37		
kg / set	2.9	3.8		6.7		

Fixed top jaw

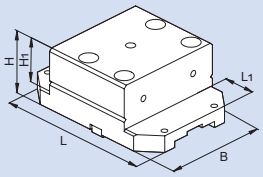

Centco4-MLW-D	400-4	600-4	750-4	1000-4	1200-4	1400-4
Id. No.	5325947	5325927		5325957		
B	100	120		160		
H	69	69		69		
H1	50	50		50		
L	142	179		199		
L1	37	37		37		
kg / set	5.3	7.6		11.7		

Clamping insert hardened

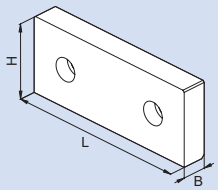

Centco4-MLW-D	400-4	600-4	750-4	1000-4	1200-4	1400-4
Id. No.	5325952	5325932		5325877		
B	16	16		16		
H	50	50		50		
L	100	120		160		
kg / set	0.7	0.8		1.0		

Clamping insert soft

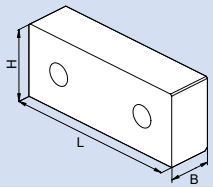

Centco4-MLW-D	400-4	600-4	750-4	1000-4	1200-4	1400-4
Id. No.	5325953	5325933		5325878		
B	30	30		30		
H	50	50		50		
L	100	120		160		
kg / set	1.2	1.4		1.9		

Clamping insert with serrations

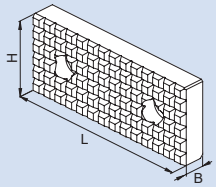

Centco4-MLW-D	400-4	600-4	750-4	1000-4	1200-4	1400-4
Id. No.	5325951	5325931		5325959		
B	16	16		16		
H	50	50		50		
L	100	120		160		
kg / set	0.6	0.7		1.0		

Clamping insert for SinterGrip

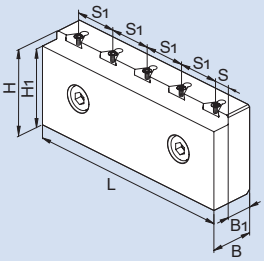

Centco4-MLW-D	400-4	600-4	750-4	1000-4	1200-4	1400-4
Id. No.	5326058	5326060		5326054		
B	25	25		25		
B1	15	15		15		
H	50	50		50		
H1	45	45		45		
L	100	120		160		
S	10	25		35		
S1	20	15		10		
kg / set	1.0	1.2		1.5		

* SMW-AUTOBLOK is recommending not to clamp any diameters, that are larger than the chuck O.D.
For more detailed information please ask our customer service.

Centco4-MLW-D

INCH
SERRATION

■ ALB
■ SinterGrip

Stop pin ALB

ALB-chuck

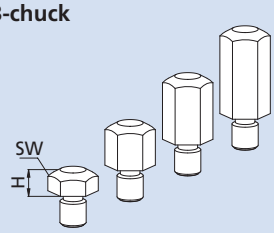

Type	Centco4-MLW-D-400	Centco4-MLW-D-600 / 750	Centco4-MLW-D-1000 / 1200 / 1400
H [mm]	WS19 / M10	WS24 / M12	WS27 / M16
20	5326290	5326296	5326063
25	5326291	5326297	5326064
30	5326292	5326298	5326065
35	5326293	5326299	5326066
40	5326294	5326300	5326067
45	5326295	5326301	5326068

ALB-jaw

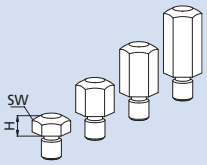

H [mm]	WS13 / M8
5	017603
10	016514
15	016515
20	016516
25	081191

SinterGrip

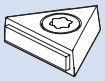

Type	SinterGrip STD	SinterGrip HRC	SinterGrip ALU
1 set	58450119	58450129	58450139

Stationary chucks pneumatic / hydraulic

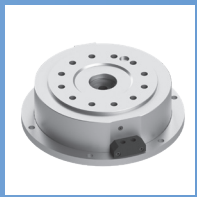

Page 352

USC
With stroke control

Pneumatic static cylinder
Ø 140 - 260 mm

- Unit with static cylinder
- With stroke control
- Can be equipped with different types of chucks

Page 354

US-CL
With 2 jaws long stroke chucks

US-A
With 3 jaws long or normal stroke chucks

Stationary cylinder and chuck unit, hydraulic
Ø 80 - 315 mm

- Unit with static cylinder and chuck
- Closed center chucks type CL/AN/AL

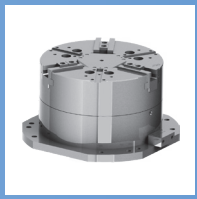

Page 356

US - large diameters
Pneumatic static cylinder
2 or 3 or 4 jaws

Pneumatic static cylinder and chuck unit
Ø 400 - 800 mm

- Normal or long stroke depending on chuck model
- 2/3/4 jaws depending on chuck model & diameter
- Sealed or not sealed chucks depending on chuck model

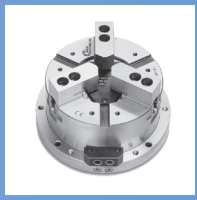

Page 358

HB-D
INCH SERRATION
2 or 3 jaws

HB-C
TONGUE & GROOVE
3 jaws

Stationary chuck, hydraulic
Ø 130 - 315 mm

- Built-in hydraulic cylinder
- 2 and 3 jaws

Page 360

PB-D
INCH SERRATION
2 or 3 jaws

PB-C
TONGUE & GROOVE
3 jaws

Stationary chuck, pneumatic
Ø 130 - 315 mm

- Built-in pneumatic cylinder
- 2 and 3 jaws

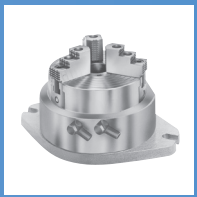

Page 362

STP
INCH SERRATION
3 jaws

Stationary chuck, pneumatic
Ø 125 - 280 mm

- Built-in pneumatic cylinder
- With through-hole

Page 364

Centco4
2 + 2 self centering

4-jaw chuck Ø 210 - 630 mm

- Independent self centering clamping in 2 axis via 1 central actuating mechanism
- Centrifugal force compensation
- 2 + 2 jaws

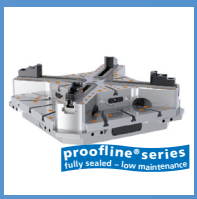

Page 374

Centco4 *digit*-HLW
Hydraulic Chuck

4-jaw chuck Ø 750 mm

- Digitized by integrated sensor technology
- Monitoring of different process parameters even during processing
- Non-contact power supply for sensors and signal output by means of inductive couplers
- **proofline®**= sealed - low maintenance

USC

Pneumatic static cylinder

Stationary cylinder + chuck unit Ø 140 - 260 mm

- Can be equipped with different types of chucks
- With stroke control

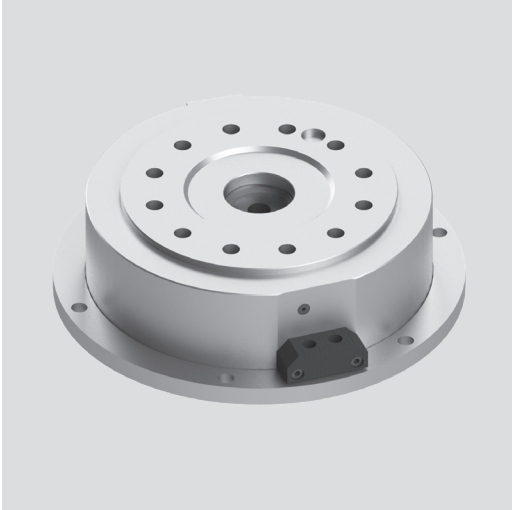

Application/customer benefits

- Gripping of components on vertical or horizontal machining centers

Technical features

- Standard pneumatic cylinder can be equipped with various type of chucks:
  - 2 / 3 / 4 jaws versions depending on chuck model and diameter
  - Standard or sealed, depending on applied chuck
  - Master jaw with serration or Tongue & Groove available
  - Normal or long stroke depending on chuck model and diameter
- Continuous air pressure required
- Optional SAB safety valve to hold pressure during pallet transfer

Remark: The clamping unit consists of static cylinder + connection kit + chuck to be selected.
For chuck details, please see the technical data of the selected chuck.

Standard equipment

Static cylinder
the connection kit must be added,
see the table on next page

Ordering example

Please see the below table for part numbers and part descriptions

Accessories

Valve SAB1 Id. No. 27581610 for USC 140/170
Valve SAB2 Id. No. 27581620 for USC 210/260
Mounting brackets

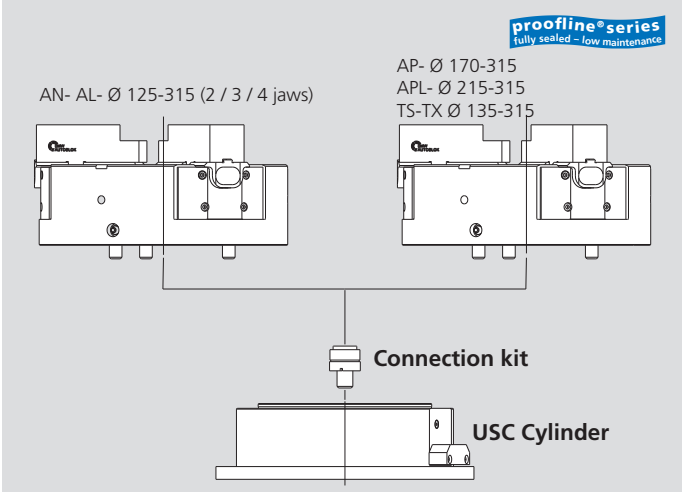

- **USC-AN** = cylinder equipped with a 2 / 3 jaw chuck type AN-(normal stroke). Chuck until to Ø 315 mm
- **USC-AL** = cylinder equipped with a 2 / 3 jaw chuck type AL-(long stroke). Chuck until to Ø 315 mm
- **USC-TS** = cylinder equipped with a 2 / 3 jaw chuck type TS-. Chuck from Ø 135 to 315 mm
- **USC-TX** = cylinder equipped with a 3 jaw chuck. Chuck from Ø 170 to 315 mm
- **USC-AP** = cylinder equipped with a 3 jaw chuck type AP- (normal stroke). Chuck until to Ø 315 mm
- **USC-APL** = cylinder equipped with a 3 jaw chuck type APL- (long stroke). Chuck Ø 170 to 315 mm

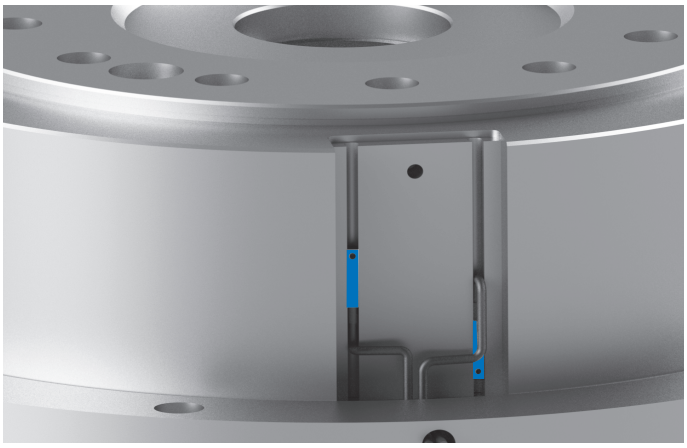

Stroke control
The stroke control system consists of two built in magnets and two external sensors (Id.-Nr. 71834910) reading the axial position of the cylinder piston and consequently of chuck jaws mounted on it.
The stroke control gives the following signals: „chuck fully open“, „chuck fully closed“ or „part clamped“ positions.

Technical data

SMW-AUTOBLOK Type Id. No.		USC 140 97501407	USC 170 97501702	USC 210 97502106	USC 260 97502601
Piston area-chuck (open)	cm²	133	189	269	434
Piston area-chuck (closed)	cm²	126	176	249	409
Max. operating pressure	bar	7	7	7	7
Piston stroke	mm	17	22	26	31
Pushforce at 6 bar	kN	8	11	16	26
Pullforce at 6 bar	kN	7.5	10.5	15	24.5
Cylinder unit mass	kg	3.3	5	7	12.5

Stationary cylinder + chuck unit
Ø 140 - 260 mm

- Can be equipped with different types of chucks
- With stroke control

USC

Pneumatic static cylinder

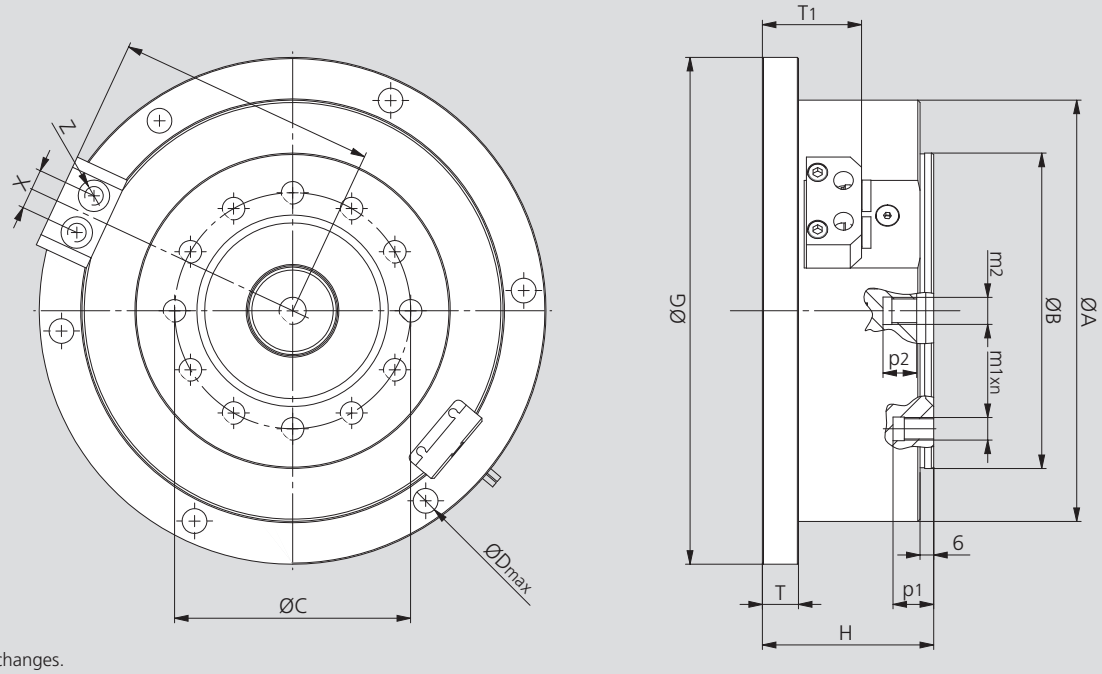

Subject to technical changes.
For more detailed information please ask our customer service.

SMW-AUTOBLOK Type Id. No.		USC 140 97501407	USC 170 97501702	USC 210 97502106	USC 260 97502601
A	mm	162	187	217	275
B	mm	115	140	170	220
C	mm	82.6	104.8	133.4	171.4
D	mm	11	11	11	13
G	mm	200	225	255	327
H	mm	61.5	76	83	95
Q	mm	98	110.5	129.5	158.5
T	mm	16	16	16	16
T1	mm	38.5	40,5	43.5	43.5
X	mm	18	18	22	22
Z	inch	1/8"	1/8"	1/4"	1/4"
m1	mm	M10	M10	M12	M16
m2	mm	M10	M12	M16	M20
n	mm	12x	12x	12x	12x
p1	mm	14	18	19	23
p2	mm	18	15	21	25

Ordering review connection kit

Size	125 AN-AL	135 TS	165 AN-AL	170 AP	170 TS/TX	210 AN-AL	210 TS-TX	215 AP-APL	250 AN-AL	250 TS-TX	260 AP-APL	315 AN-AL	315 TS-TX	315 AP-APL
USC 140	75511410	75511470	-	-	-	-	-	-	-	-	-	-	-	-
USC 170	-	-	75511760	75511760	75511770	-	-	-	-	-	-	-	-	-
USC 210	-	-	-	-	-	75512110	75512170	75512160	-	-	-	-	-	-
USC 260	-	-	-	-	-	-	-	-	75512610	75512670	75512660	75512620	75512670	75512660

- If the cylinder operates an AN / AL chuck (with 2 / 3 / 4 jaws and various jaw types), the chuck must be ordered separately.
- If the cylinder operates an AP / APL chuck (only 3 jaws available and various jaw types), the chuck must be ordered separately.
- If the cylinder operates a TS / TX chuck (only 3 jaws available and various jaw types), the chuck must be ordered separately.
- For technical information on the chucks, please see the specific catalogue page. (more information at general catalog turning).
- For the chucks Id. Numbers, please see our price lists or ask a quotation to your nearest SMW-AUTOBLOK office.

US-CL

With 2-jaw long stroke chuck

US-A

With 3-jaw long or normal stroke chuck

Stationary cylinder + chuck unit Ø 80 - 315 mm

- Hydraulic cylinder module + chuck
- Closed center chucks type CL / AN / AL

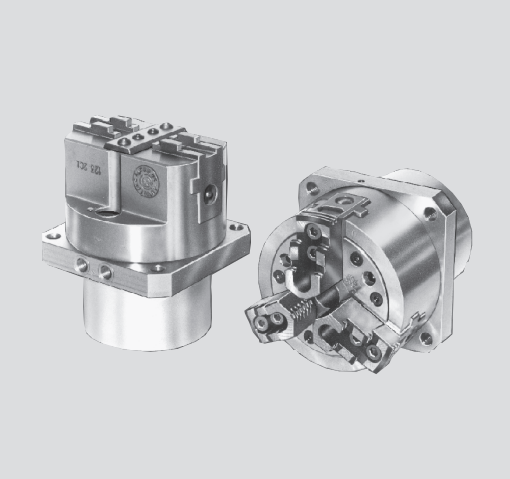

Application/customer benefits

- Gripping units designed to suit special purpose machines and transfer lines
- Also used as loading chucks to handle workpieces

Technical features

- Stationary hydraulic cylinder + chuck unit consisting of a modular cylinder and standard 2- or 3-jaw chuck
- Continuous oil pressure required
- For chuck details please see technical data of the selected chuck

Remark: when ordering please specify the position of the oil connectors (on the side or on the back)

Standard equipment

Standard chuck with cylinder and connecting parts

Ordering example

US 125-CLC with rear oil connection, or
US 250-AND with side oil connection and chuck 90° revolved

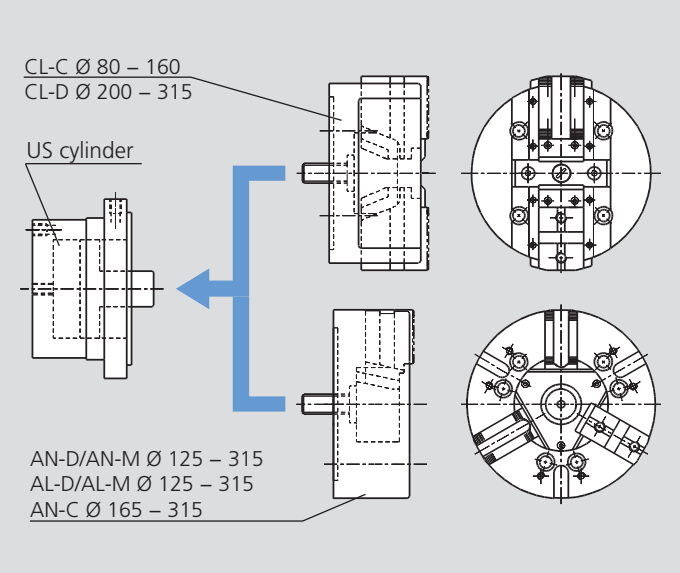

- **US-CL-C** = cylinder equipped with a 2 jaw chuck type CL-C (long stroke / tongue & groove). Chuck Ø 80 to 160 mm.
- **US-CL-D** = cylinder equipped with a 2 jaw chuck type CL-D (long stroke / inch serration). Chuck Ø 200 to 315 mm.
- **US-AN-D** = cylinder equipped with a 3 jaw chuck type AN-D (normal stroke / inch serration). Chuck Ø 125 to 315 mm.
- **US-AN-M** = cylinder equipped with a 3 jaw chuck type AN-M (normal stroke / metric serration). Chuck Ø 125 to 315 mm.
- **US-AL-D** = cylinder equipped with a 3 jaw chuck type AL-D (long stroke / inch serration). Chuck Ø 125 to 315 mm.
- **US-AL-M** = cylinder equipped with a 3 jaw chuck type AL-M (long stroke / metric serration). Chuck Ø 125 to 315 mm.
- **US-AN-C** = cylinder equipped with a 3 jaw chuck type AN-C (normal stroke / tongue & groove). Chuck Ø 165 to 315 mm.
- **Special units** = on request the US cylinder can be equipped with other chucks, for example with a quick jaw change chuck type AN-RM with stationary cylinder available.

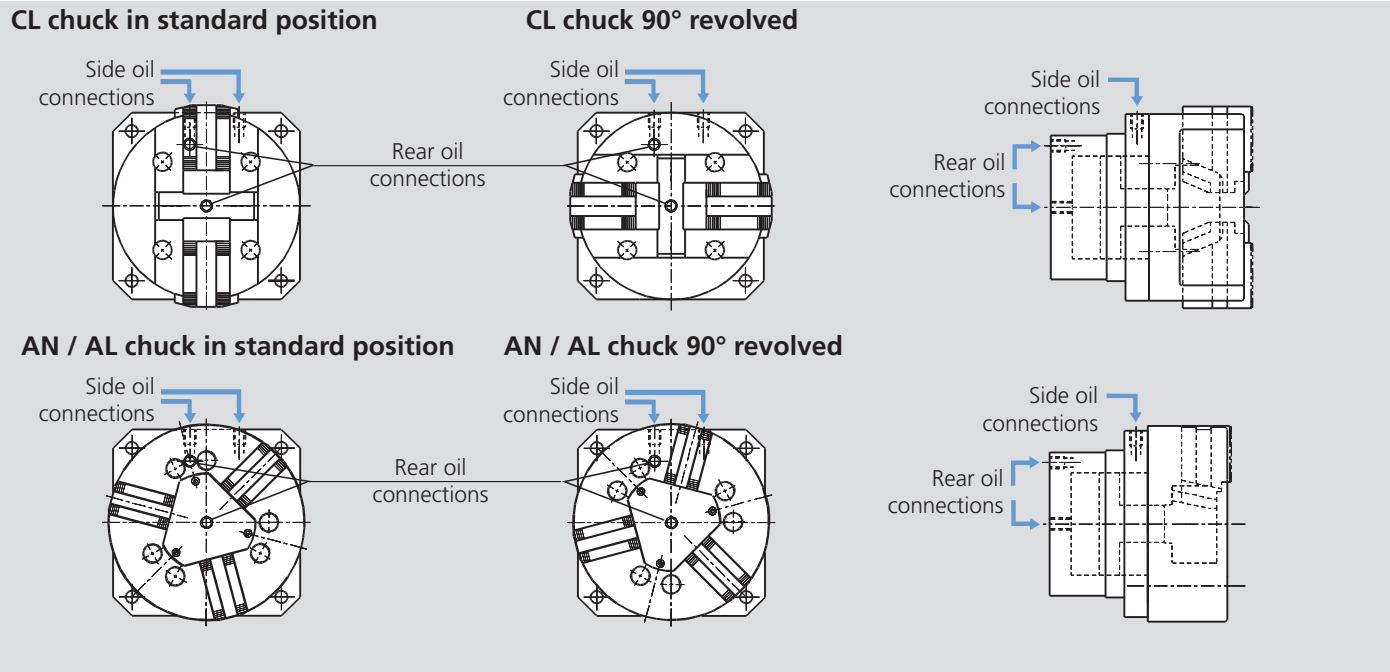

- The chuck can be mounted on the cylinder 90° revolved if the standard position creates interferences with the working cycle. Please specify in the order, if a revolved position is needed.
- The oil connections can be on the side or on the back of the cylinder in order to ease the installation of the gripping unit. Please specify in the order, which version is preferred.

Stationary cylinder + chuck unit
Ø 80 - 315 mm

- Hydraulic cylinder module + chuck
- Closed center chucks type CL / AN / AL

US-CL
With 2-jaw long stroke chuck

US-A
With 3-jaw long or normal stroke chuck

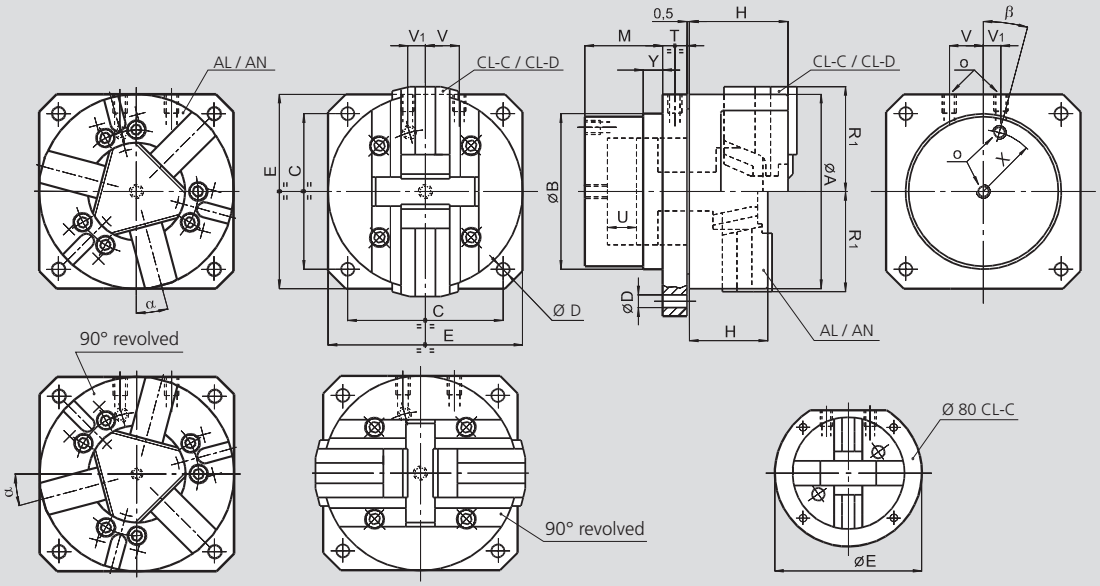

Subject to technical changes.
For more detailed information please ask our customer service.

US actuating cylinder dimensions

SMW-AUTOBLOK cylinder			US 80	US 100	US 125	US 160 US 165	US 200	US 250	US 315
Id. No. CL			77755008	77755010	77755013	77755016	77755120	77755025	77755031
Id. No. AL / AN			77755008	77755010	77755113	77755016	77755120	77755025	77755031
	B h7	mm	70	84	106	128	158	185	185
	C	mm	66	84	104	130	160	200	250
	D	mm	7	9	11	11	13.5	17	17
	E	mm	105	100	130	160	200	250	315
	M	mm	45	52	60	70	80	90	90
Oil connections	**O**	inch	1/8 BSP	1/8 BSP	1/4 BSP	1/4 BSP	3/8 BSP	3/8 BSP	3/8 BSP
	T	mm	16	16	20	20	25	25	25
	U	mm	11	14	20	25	30	35	35
	V	mm	15	18	12	28	35	41	41
	V1	mm	15	18	12	15	18	15	15
	X	mm	27	33	43	52	63	75	75
	Y	mm	10	10	10	20	20	20	20
	β	deg.	30°	30°	15°	15°	0°	0°	0°
Piston area		cm²	16	25	42	68	112	166	166

Units with CL-C and CL-D chucks (more information at general catalog turning page 96)

SMW-AUTOBLOK Type			US 80-CL-C	US 100-CL-C	US 125-CL-C	US 160-CL-C	US 200-CL-D	US 250-CL-D	US 315-CL-D
	A	mm	80	100	125	160	200	250	315
	H	mm	45	54	76	92	103	109	114
Chuck open	**R1**	mm	40	50	68	87	108	132	166
Max. pressure		bar	38	36	36	37	32	30	36
Max. gripping force		kN	9	14	24	40	55	78	95

Units with AN-D / AN-M / AN-C chucks (more information at general catalog turning page 54 and 58)

SMW-AUTOBLOK Type			US 125-AN-D US 125-AN-M	US 165-AN-D US 165-AN-M US 165-AN-C	US 210-AN-D US 210-AN-M US 210-AN-C	US 250-AN-D US 250-AN-M US 250-AN-C	US 315-AN-D US 315-AN-M US 315-AN-C
	A	mm	127	165	210	254	315
	H	mm	57	71	85	95	105
Chuck open	**R1**	mm	64	83	105	128	158
	α	deg.	0°	15°	15°	15°	15°
Max. pressure		bar	47	36	31	28	36
Max. gripping force		kN	56	70	105	140	180

Units with AL-D / AL-M chucks (more information at general catalog turning page 56)

SMW-AUTOBLOK Type			US 125-AL-D US 125-AL-M	US 165-AL-D US 165-AL-M	US 210-AL-D US 210-AL-M	US 250-AL-D US 250-AL-M	US 315-AL-D US 315-AL-M
	A	mm	127	165	210	254	315
	H	mm	57	71	85	95	105
Chuck open	**R1**	mm	67	86	109	133	164
	α	deg.	0°	15°	15°	15°	15°
Max. pressure		bar	60	44	45	39	45
Max. gripping force		kN	45	54	90	120	135

US - large diameters

Pneumatic static cylinder for 2 or 3 or 4 jaws

Stationary cylinder + chuck unit Ø 400 - 800 mm

- **Option for serrated or Tongue & Groove jaws**
- **Standard or sealed, depending on applied chuck**
- **Option of 2 / 3 / 4 jaws depending on chuck model**
- **Option of long or normal stroke depending on chuck model**

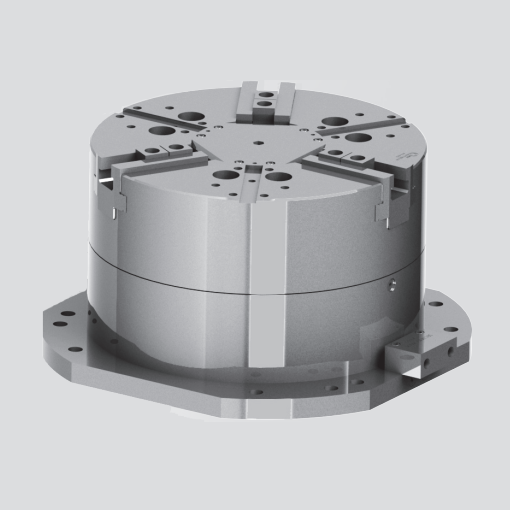

Application/customer benefits

- Gripping of large components on vertical or horizontal machining centers

Technical features

- Standard pneumatic cylinder to be equipped with various type of chucks:
  - 2 / 3 / 4 jaws versions depending on chuck model and diameter
  - Chucks sealed or not sealed with serrated or TONGUE & GROOVE master jaw available
  - Normal or long stroke depending on chuck model and diameter
- Continuous air pressure required
- Optional SAB safety valve to hold pressure during pallet transfer

Remark: the clamping unit is made of standard cylinder + eventual connection kit (for AP and APL chucks only) + chuck to be selected.
For chuck details, please see the technical data of the selected chuck

Standard equipment

Static cylinder with connecting parts for IN / IL chucks.
For AP and APL chucks a specific connecting kit must be added

Ordering example

US-400-AN

AN- AL- Ø 400 (2 / 3 / 4 jaws)
IN- IL- Ø 500-630-800 (3 / 4 jaws)

AP- Ø 400
APL- Ø 400-500-630-800 (3 jaws only)

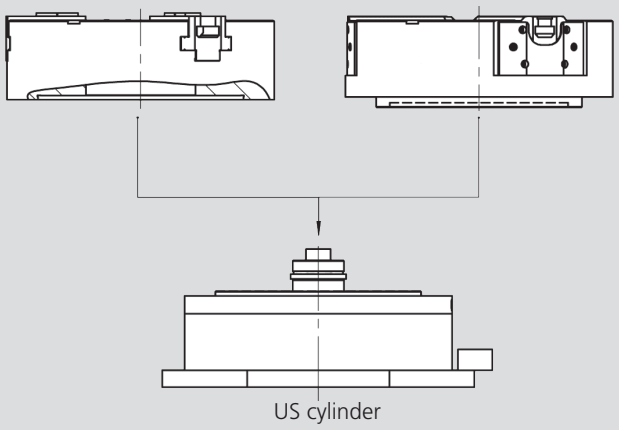

- **US-AN** = cylinder equipped with a 3-jaw chuck type AN- (normal stroke). Chuck Ø 400 mm.
- **US-AL** = cylinder equipped with a 3-jaw chuck type AL- (long stroke). Chuck Ø 400 mm.
- **US-IN** = cylinder equipped with a 3-jaw chuck type IN- (normal stroke). Chuck Ø 500 to 800 mm.
- **US-IL** = cylinder equipped with a 3-jaw chuck type IL- (long stroke). Chuck Ø 500 to 800 mm.
- **US-AP** = cylinder equipped with a 3-jaw chuck type AP- (normal stroke). Chuck Ø 400 mm.
- **US-APL** = cylinder equipped with a 3-jaw chuck type APL- (long stroke). Chuck Ø 400 to 800 mm.

Technical data

SMW-AUTOBLOK Type		US-400 AN / AL	US-400 AP / APL	US-500 APL	US-630 APL	US-800 APL	US-500 IN / IL	US-630 IN / IL	US-800 IN / IL
Piston area-chuck (open)	cm²	800	800	1256	1256	1256	1256	1256	1256
Piston area-chuck (closed)	cm²	760	760	1211	1211	1211	1211	1211	1211
Max. operating pressure	bar	7	7	7	7	7	7	7	7
Mass of cylinder unit	kg	118	118	175	175	175	175	175	175
Gripping force at 6 bar "N"	kN	135	125	-	-	-	175	175	175
Gripping force at 6 bar "L"	kN	80	80	130	130	130	130	130	130

Stationary cylinder + chuck unit Ø 400 - 800 mm

- Option for serrated or Tongue & Groove jaws
- Standard or sealed, depending on applied chuck
- Option of 2 / 3 / 4 jaws depending on chuck model
- Option of long or normal stroke depending on chuck model

US - large diameters

Pneumatic static cylinder for 2 or 3 or 4 jaws

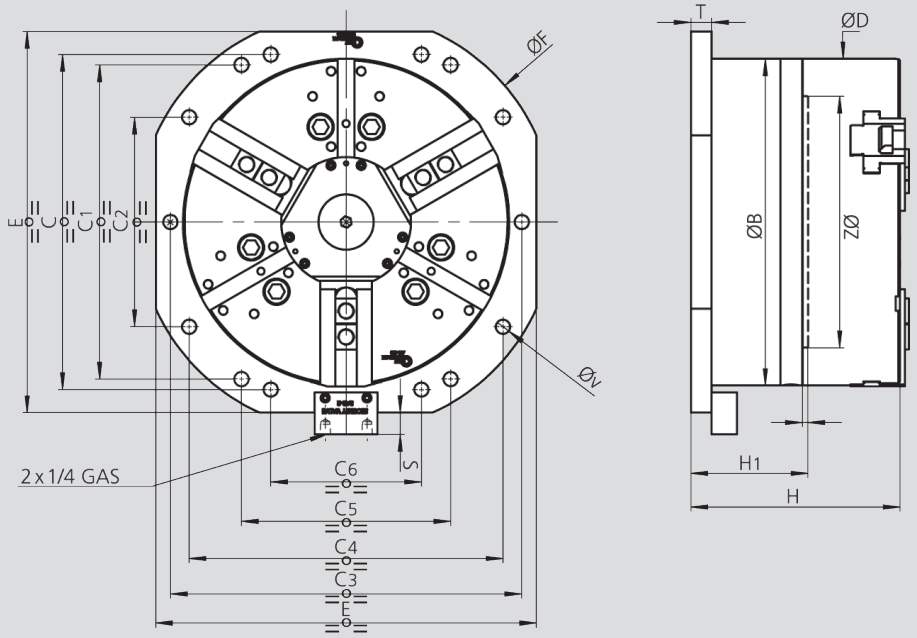

Subject to technical changes.
For more detailed information please ask our customer service.

SMW-AUTOBLOK Type			US-400 AN/AL	US-400 AP/APL	US-500 APL	US-630 APL	US-800 APL	US-500 IN/IL	US-630 IN/IL	US-800 IN/IL
O. D. cylinder	**B**	mm	390	390	475	475	475	475	475	475
	C	mm	400	400	-	-	-	-	-	-
	C1	mm	375	375	300	300	300	300	300	300
	C2	mm	250	250	-	-	-	-	-	-
	C3	mm	-	-	500	500	500	500	500	500
	C4	mm	375	375	400	400	400	400	400	400
	C5	mm	250	250	-	-	-	-	-	-
	C6	mm	180	180	-	-	-	-	-	-
Ø chuck	**D**	mm	390	390	500	630	800	510	630	800
	E	mm	455	455	525	525	525	525	525	525
	E1	mm								
	ØF	mm	500	500	538	538	538	538	538	538
	H	mm	250	273	300	310	330	270	290	290
	H1	mm	140	140	146	146	146	146	146	146
	I	mm	7	7	7	7	7	7	7	7
	T	mm	25	25	25	25	25	25	25	25
	ØV	mm	17	17	17	17	17	17	17	17
	ØZ h7	mm	300	300	380	380	380	380	380	380

Ordering review

SMW-AUTOBLOK Size	400	500	630	800
A: Cylinder Id. No. (for all versions)	97504004	97506302	97506302	97506302
B: Kit Id. No. (only for „AP" & „APL" chucks)	97634004	97635002	97636302	97646302

- If the cylinder operates a IN / IL or a AN / AL chuck (with 2 / 3 / 4 jaws and various jaw types), only the p/n in line A must be purchased. The chuck must be ordered separately.
- If the cylinder operates a AP / APL chuck (only 3 jaws available and various jaw types), both p/ns in line A and B must be purchased. The chuck must be ordered separately.
- For technical information on the chucks, please see the specific catalogue page. (more information at general catalog turning).
- For the chucks p/ns, please see our price lists or ask a quotation to your nearest SMW-AUTOBLOK office.

HB-D

INCH SERRATION
2 or 3 jaws

HB-C

TONGUE & GROOVE
3 jaws

Stationary chuck, hydraulic Ø 130 - 315 mm

- Built-in hydraulic cylinder
- 2 and 3 jaws

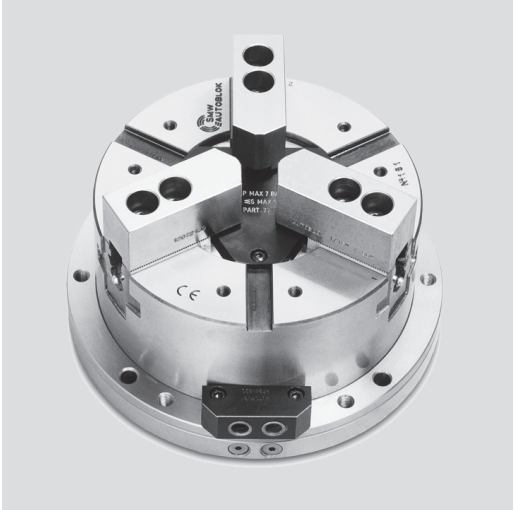

Application/customer benefits

- Stationary hydraulic chuck for self centering clamping of parts on milling machines, machining centers and special machines

HB-D: INCH SERRATED master jaws (1/16" x 90°)
HB-C: TONGUE & GROOVE master jaws (American standard)
HB-M: METRIC SERRATED master jaws (1.5 mm x 60°) **on request from Ø 165**

Technical features

- Stationary chuck consisting of a 2- or 3-jaw self centering chuck with built-in hydraulic cylinder
- Compact design
- Case hardened body to assure consistent high precision and long chuck life

Standard equipment

Stationary chuck
1 set T-nuts with bolts
(HB-C excluded)
1 set of soft blank top jaws
(HB-C excluded)

Ordering example

Stationary chuck HB-C 250 (3 jaws)
or
Stationary chuck HBL-D2 165 (2 jaws)

Technical data

SMW-AUTOBLOK Type		HB-D 130	HB-D 165 HB-C 165	HB-D 210 HB-C 210	HB-D 250 HB-C 250	HB-D 315 HB-C 315
Radial jaw stroke	mm	3	3.2	4	4.6	5.5
Radial jaw stroke HBL-D2 (2 jaws)*	mm	5.6	6	7.5	8.8	10.5
Piston area	cm^2	63	79	114	167	203
Max. operating pressure	bar	30	30	30	30	30
Gripping force at 25 bar	kN	50	55	85	125	150
Gripping force at 25 bar HBL-D2 (2 jaws)*	kN	28	35	52	75	90
Weight (without top jaws)	kg	9.5	18	30	44	69
Id. No. HB-D 3 jaws		77271113	77271116	77271121	77271125	77271131
Id. No. HB-C 3 jaws		-	77277516	77277521	77277525	77277531
Id. No. HBL-D 2 jaws		-	77271716	77271721	77271725	77271731

* The HBL-D 2 jaw fixture is available with serrated master jaws (inch or metric) and long stroke only.

JAWS-CATALOG

Request or download:
www.smw-autoblok.de

Stationary chuck, hydraulic
Ø 130 - 315 mm

- Built-in hydraulic cylinder
- 2 and 3 jaws

HB-D
INCH SERRATION
2 or 3 jaws

HB-C
TONGUE & GROOVE
3 jaws

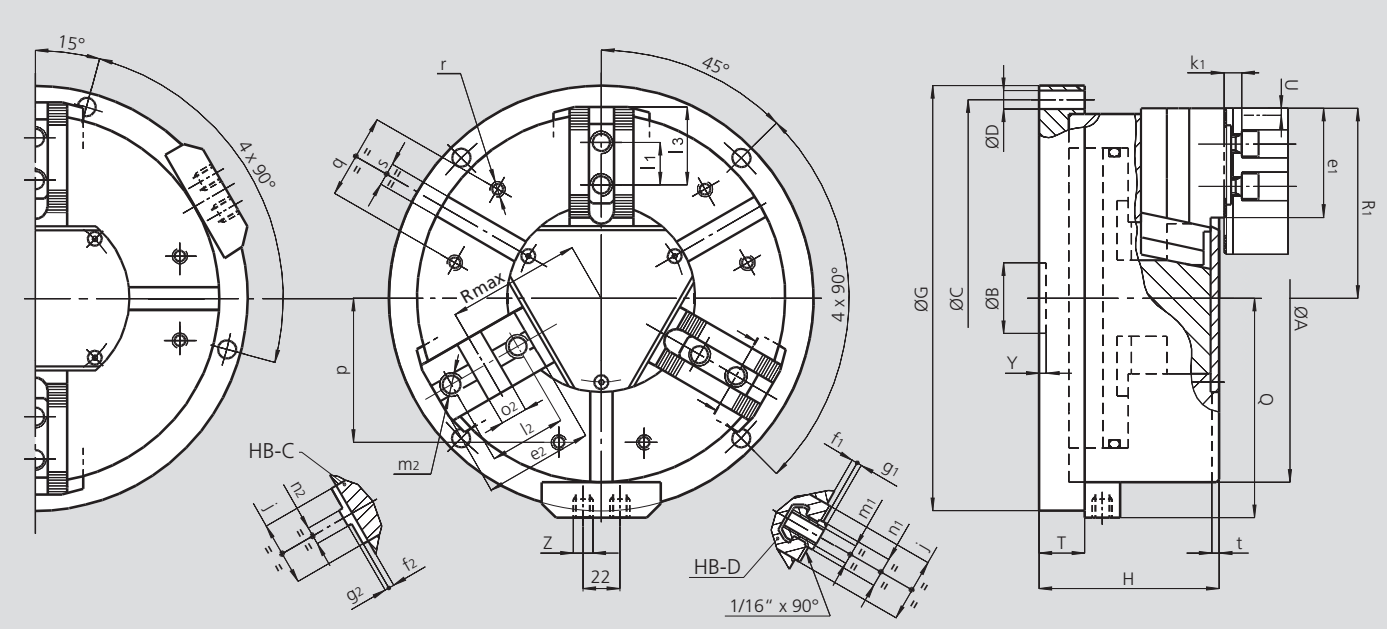

Subject to technical changes.
For more detailed information please ask our customer service.

Common dimensions

SMW-AUTOBLOK Type			HB-D 130	HB-D 165 HB-C 165	HB-D 210 HB-C 210	HB-D 250 HB-C 250	HB-D 315 HB-C 315
	A	mm	135	170	215	260	315
	B	mm	30	30	35	50	50
Fixing holes circle	**C**	mm	155	190	235	280	340
Fixing holes diameter	**D**	mm	9	11	11	13	13
	G	mm	175	210	255	300	360
	H	mm	89	100	117	127	141
	Q	mm	92.5	110	133	155	183
	T	mm	25	27	30	32	32
Radial jaw stroke (3 jaws)	**U**	mm	3	3.2	4	4.6	5.5
Radial jaw stroke HBL-D2 (2 jaws)	**U**	mm	5.6	6	7.5	8.8	10.5
	Y	mm	5	5	5	5	5
Hydraulic connections	**Z**	inch	R1/4"	R1/4"	R1/4"	R1/4"	R1/4"
	j	mm	26	30	36	45	45
	k1	mm	10	10	11	12	12
	p	mm	52	65	80	102	120
	q	mm	30	36	45	60	60
	r	mm	M6	M8	M8	M10	M10
	s H12	mm	12	16	16	16	16
	t	mm	3.5	5	5	5	5

HB-D and HBL-D2 fixtures specific dimensions

SMW-AUTOBLOK Type			HB-D 130	HB-D 165	HB-D 210	HB-D 250	HB-D 315
	e1	mm	45	48	60	77	99
	f1	mm	3	4	3	4	4
	g1	mm	2.5	2.5	2.5	3.5	3.5
	l1	mm	16	16.5	23	30	30
T-nut position min. / max.	**l3**	mm	23 / 30	24 / 40	33 / 50	43 / 62	43 / 84
	m1	mm	M8	M10	M12	M16	M16
	n1 h8	mm	12	14	17	21	21
Chuck open HB-D (3 jaws)	**R1**	mm	71	89	110	134	162
Chuck open HBL-D2 (2 jaws)	**R1**	mm	74	92	114	138.5	168

HB-C fixtures specific dimensions (available only as 3-jaw chuck version)

SMW-AUTOBLOK Type			HB-C 165	HB-C 210	HB-C 250	HB-C 315
	e2	mm	54	71	77	99
	f2	mm	4	4	4	4
	g2	mm	3	3	3	3
	l2	mm	38	44.4	54	63.5
	m2	mm	M10	M12	M16	M16
	n2 h8	mm	7.94	7.94	12.70	12.70
	o2H7	mm	12.68	12.68	19.03	19.03
Chuck open	**R1**	mm	89	110	134	162
Chuck open	**Rmax**	mm	62	77	94	109

PB-D

INCH SERRATION
2 or 3 jaws

PB-C

TONGUE & GROOVE
3 jaws

Stationary chuck, pneumatic
Ø 130 - 315 mm

- Built-in cylinder
- 2 and 3 jaws

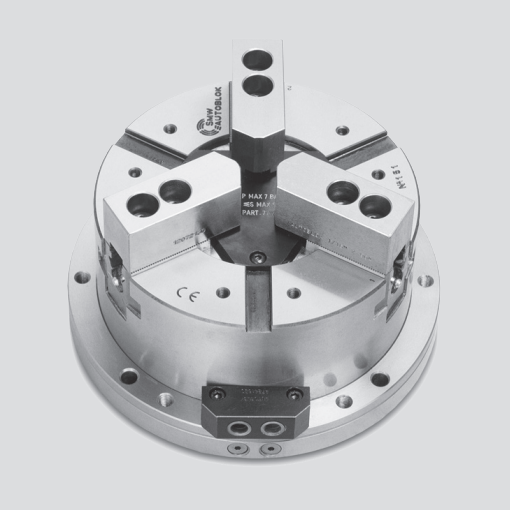

Application/customer benefits

- Self centering chuck used on milling machines, machining centers and special machines

PB-D: INCH SERRATED master jaws (1/16" x 90°)
PB-C: TONGUE & GROOVE master jaws (American standard)
PB-M: METRIC SERRATED master jaws (1.5 mm x 60°) **on request**

Technical features

- Stationary chuck consisting of a 2- or 3-jaw chuck with a built-in pneumatic cylinder
- Compact design
- Case hardened body to assure consistent high precision and long chuck life

Caution! A service unit consisting of a filter, dryer and oiler must be installed in the supply line.

Standard equipment

Clamping unit
1 set of soft blank top jaws
(PB-C excluded)

Ordering example

Stationary chuck PB-C 250 (3 jaws)
or
Stationary chuck PBL-D2 165 (2 jaws)

Technical data

SMW-AUTOBLOK Type		PB-D 130	PB-D 165 PB-C 165	PB-D 210 PB-C 210	PB-D 250 PB-C 250	PB-D 315 PB-C 315
Radial jaw stroke	mm	3.2	3.6	4.4	5	6.3
Radial jaw stroke PBL-D2 (2 jaws)*	mm	6	6.8	8.4	9.7	12
Piston area	cm^2	82	143	236	358	548
Max. operating pressure	bar	7	7	7	7	7
Gripping force at 6 bar	kN	14	24	42	64	98
Gripping force at 6 bar PBL-D2 (2 jaws)*	kN	9	16	26	39	60
Weight (without top jaws)	kg	9	17	28	42	63
Id. No. PB-D 3 jaws		77270713	77270716	77270721	77270725	77270731
Id. No. PB-C 3 jaws		-	77276816	77276821	77276825	77276831
Id. No. PBL-D 2 jaws		77271313	77271316	77271321	77271325	77271331

* The PBL-D 2 jaw fixture is available with serrated master jaws (inch or metric) and long stroke only.

Option for the PB-D and PB-C chuck

Safety unit that maintains a constant pressure inside the cylinder which maintains a steady clamping force even in case of a drop or lack of line pressure

SAB

Safety unit with double non-return valve, Id. No. 27581620

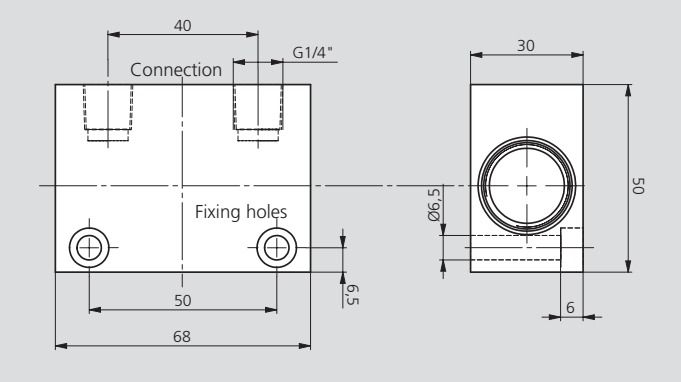

JAWS-CATALOG

Request or download:
www.smw-autoblok.de

Stationary chuck, pneumatic
Ø 130 - 315 mm

- Built-in cylinder
- 2 and 3 jaws

PB-D
INCH SERRATION
2 or 3 jaws

PB-C
TONGUE & GROOVE
3 jaws

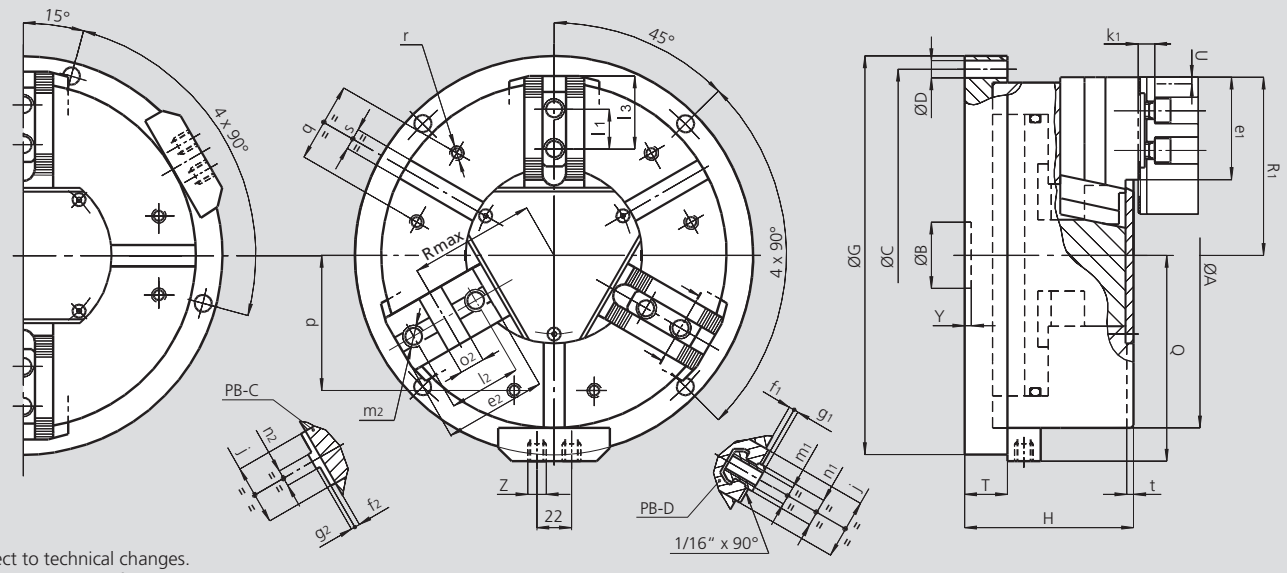

Subject to technical changes.
For more detailed information please ask our customer service.

Common dimensions

SMW-AUTOBLOK Type			PB-D 130	PB-D 165 PB-C 165	PB-D 210 PB-C 210	PB-D 250 PB-C 250	PB-D 315 PB-C 315
	A	mm	135	170	215	260	315
	B	mm	30	30	35	50	50
Fixing holes circle	**C**	mm	155	190	235	280	340
Fixing holes diameter	**D**	mm	9	11	11	13	13
	G	mm	175	210	255	300	360
	H	mm	89	100	117	127	141
	Q	mm	93	110	133	155	183
	T	mm	25	27	30	32	32
Radial jaw stroke (3 jaws)	**U**	mm	3.2	3.6	4.4	5	6.3
Radial jaw stroke PBL-D2 (2 jaws)	**U**	mm	6	6.8	8.4	9.7	12
	Y	mm	5	5	5	5	5
Pneumatic connections	**Z**	inch	R1/4"	R1/4"	R1/4"	R1/4"	R1/4"
	j	mm	26	30	36	45	45
	k1	mm	10	10	11	12	12
	p	mm	52	65	80	102	120
	q	mm	30	36	45	60	60
	r	mm	M6	M8	M8	M10	M10
	s H12	mm	12	16	16	16	16
	t	mm	5	5	5	5	5

PB-D and PBL-D2 fixtures specific dimensions

SMW-AUTOBLOK Type			PB-D 130	PB-D 165	PB-D 210	PB-D 250	PB-D 315
	e1	mm	37	48	60	77	99
	f1	mm	3	4	3	4	4
	g1	mm	2.5	2.5	2.5	3.5	3.5
	l1	mm	16	16.5	23	30	30
T-nut position min. / max.	**l3**	mm	23 / 30	24 / 40	33 / 50	43 / 62	43 / 84
	m1	mm	M8	M10	M12	M16	M16
	n1 h8	mm	12	14	17	21	21
Chuck open PB-D (3 jaws)	**R1**	mm	71	89	110	134	162
Chuck open PBL-D2 (2 jaws)	**R1**	mm	74	92	114	138.5	168

PB-C fixtures specific dimensions (available in 3-jaw chuck version only)

SMW-AUTOBLOK Type			PB-C 130	PB-C 165	PB-C 210	PB-C 250	PB-C 315
	e2	mm	-	54	71	77	99
	f2	mm	-	4	4	4	4
	g2	mm	-	3	3	3	3
	l2	mm	-	38	44.4	54	63.5
	m2	mm	-	M10	M12	M16	M16
	n2 h8	mm	-	7.94	7.94	12.70	12.70
	o2 H7	mm	-	12.68	12.68	19.03	19.03
Chuck open	**R1**	mm	-	89	110	134	162
Chuck open	**Rmax**	mm	-	62	77	94	109

STP

INCH SERRATION
3 jaws

Stationary chuck, pneumatic
Ø 125 - 280 mm

- Built-in cylinder
- With through-hole

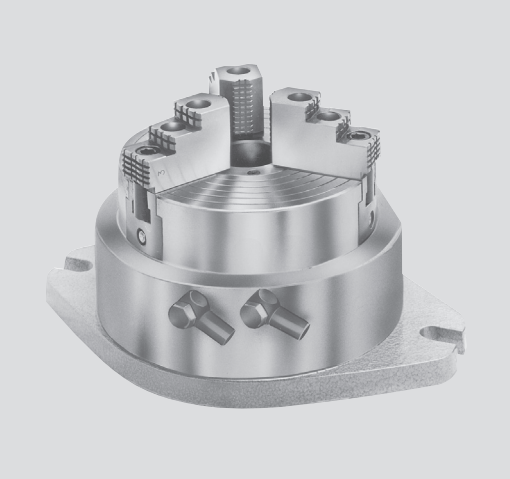

Application/customer benefits

- Self centering stationary chuck used on milling machines / machining centers / special machines
- Low profile - large open center
- Easy installation on the machine

Technical features

- Stationary chuck consisting of a 3-jaw chuck with a built-in pneumatic cylinder
- Operating pressure from 2 to 10 bar

Caution! A service unit consisting of a filter, dryer and oiler must be installed in the supply line.

Standard equipment

Stationary chuck
1 set T-nuts with bolts
1 set of soft blank top jaws
2 elbow fittings G1/4"
(G1/8" on STP 125)

Ordering example

Stationary chuck STP 280 (3 jaws)

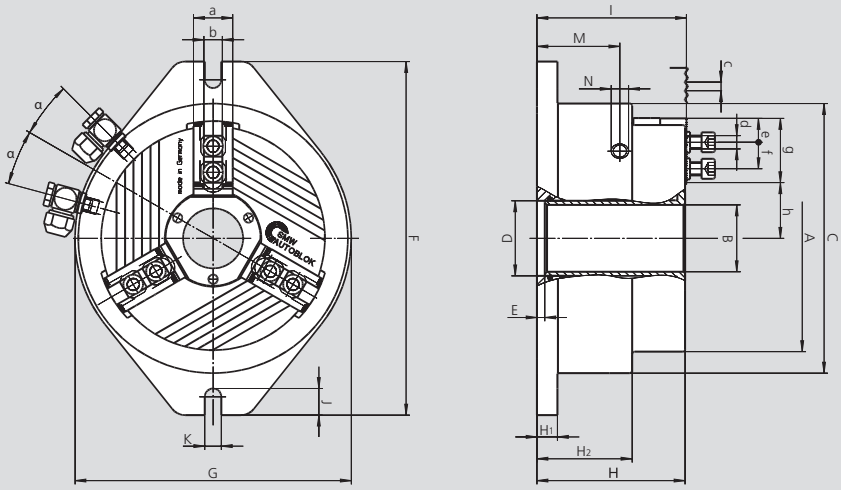

Subject to technical changes.
For more detailed information please ask our customer service.

Technical data

SMW-AUTOBLOK Type Id. No.			STP 125 013904	STP 160 013905	STP 240 053273	STP 280 052810
	A	mm	136	171	240	284
	B	mm	26	38	78	92
	C	mm	156	201	250	316
	D H6	mm	34	46	86	102
	E	mm	8	7.5	7	6
	F	mm	220	275	320	400
	G	mm	160	206	250	316
	H	mm	102.5	130	134	155.5
	H1	mm	14.5	19	18.5	23.5
	H2	mm	66	83	86	97.5
	I	mm	104	132	135.5	157
	J	mm	22	24	24	30
	K	mm	13	15	15	18
	M	mm	57	72	75	86
Pneumatic connections	**N**	inch	G 1/8"	G 1/4"	G 1/4"	G 1/4"
	a	mm	25	30	36	44
	b f7	mm	12	14	17	21
Serration	**c**	inch	1/16" x 90°	1/16" x 90°	1/16" x 90°	1/16" x 90°
Bolt ISO 4762 12.9	**d**	mm	M8 x 30	M10 x 35	M12 x 35	M16 x 40
Min.	**e**	mm	4	6	8	12
T-nuts distance min. / max.	**f**	mm	17/25	17/31	22/41.5	25/51
Serration length	**g**	mm	40	50	59	75
Min. / max.	**h**	mm	25.9 / 28.9	24.9 / 37	57.7 / 61.9	70 / 65
	α	deg.	15	15	15	7.5

Radial jaw stroke	mm	3	4.1	4.2	5
Operating pressure min. / max.	bar	2 / 10	2 / 10	2 / 10	2 / 10
Piston area	cm^2	129	206	290	532
Gripping force at 6 bar	kN	20	35	60	95
Air consumption at 6 bar	l	1	2.4	5.5	6.6
Weight (without top jaws)	kg	19	21	40	56

STP

INCH SERRATION
3 jaws

MHB-D
Hardened reversible top jaws

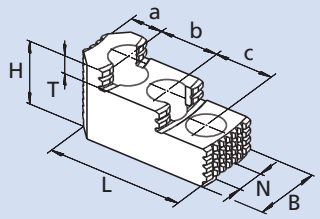

Chuck Type	STP 125	STP 160	STP 240	STP 280
Jaw type	MHB-D 125	MHB-D 160	MHB-D 200	MHB-D 251
Id. No. (set)	12081306	12081636	12082036	12083036
B	30	34	40	5
H	34	39	45	56
L	58	65	82	105
T	8.5	10	10.5	13.5
N	12	14	17	21
Serration	1/16" x 90°	1/16" x 90°	1/16" x 90°	1/16" x 90°
a	13	18	19	26
b	16	16	23	30
c	16	16	23	30
kg / set	0.6	0.9	1.7	2.85

AWB-D
Soft top jaws

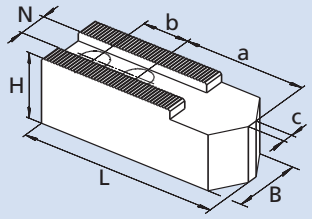

Chuck Type	STP 125	STP 160	STP 240	STP 280
Jaw type	AWB-D 125	AWB-D 165	AWB-D 200	AWB-D 250
Id. No. (set)	12071300*	035954	081616	081618
B	30	40	40	50
H	30	40	40	50
L	60	80	90	120
N	12	14	17	21
Serration	1/16" x 90°	1/16" x 90°	1/16" x 90°	1/16" x 90°
a	29	43	53	70
b	16	22	22	28
kg / set	0.9	2.0	2.7	5.1

* Id. No. is per piece. 1 set = 3 pieces.

NST
T-nuts

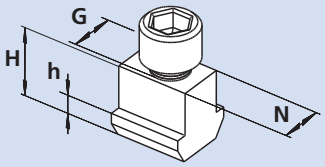

Chuck Type	STP 125	STP 160	STP 240	STP 280
T-nut type	NST 12	NST 14	NST 17-4	NST 21-5
Id. No.	089810*	013863*	013864*	033429*
N	12	14	17	21
H	21.5	26.5	26.5	30
h	7.5	9.5	9.5	11
G	M8	M10	M12	M16
Bolt ISO 4762 12.9	M8 x 30	M10 x 35	M12 x 35	M16 x 40
Tighten torque	30	50	70	150

* Id. No. is per piece. 1 set = 6 pieces.

CENTCO4

4-jaw chuck

In the beginning the jaw pairs **Z1** and **Z2** only apply a centering-force that is necessary to center the workpiece. Only if both jaw pairs **Z1** and **Z2** are in contact with the workpiece, the clamping force necessary for machining is applied.

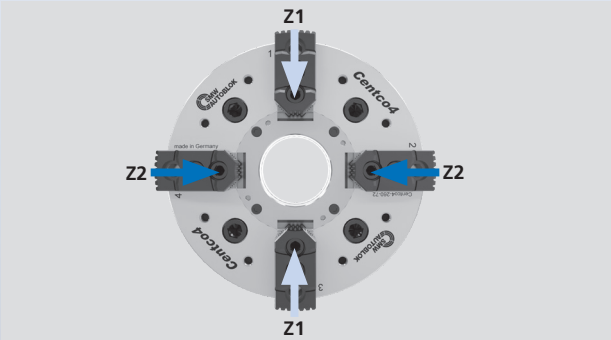

2+2 self centering + compensating clamping

of round,

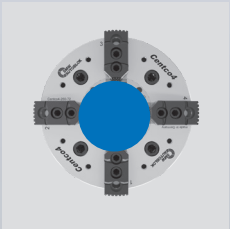

thin-walled,

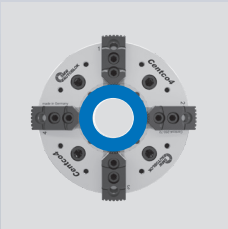

iregular shaped and

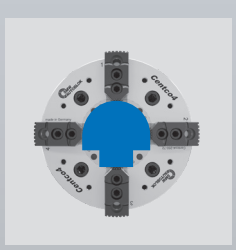

square / rectangular workpieces

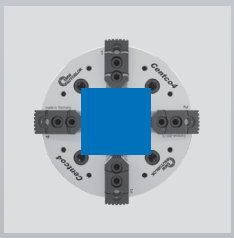

Examples for workpieces

POSSIBLE COST SAVINGS
calculation example

3-jaw chuck normal jaw chuck	€/set	**Centco4**	€/Satz
1x Special jaws	1.500,-€	1x Standard jaws	500,-€
1x Standard jaws	375,-€	1x Standard jaws	500,-€
1x Special jaws	1.750,-€	1x Standard jaws	500,-€
1x Special jaws	2.000,-€	1x Standard jaws	500,-€
Total at 1 set of jaws respectively	**5.625,-€**	**Total** at 1 set of jaws respectively	**2000,-€**
Cost savings at 1 set of jaws	**0 €**	**Cost savings** at 1 set of jaws	**3.625,-€**

Centrifugal force compensation
for **highest** speeds

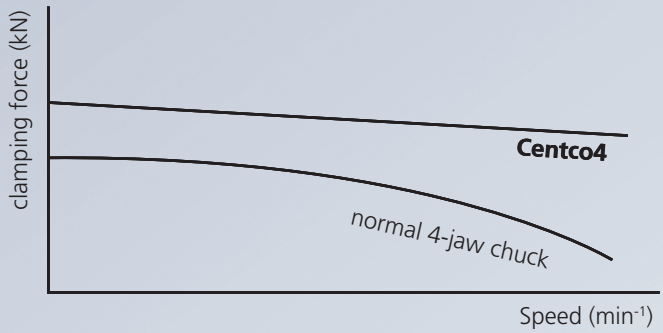

Actuation by central
Piston via standard cylinder

2+2 self centering and compensating clamping

Serration optional
Inch or metric

Clamping glossary

2+2 self centering-compensating clamping: Work piecesneed to be centered when clamping. When using 3 jaw chucks,this is carried out via a mechanical synchronizing of the 3 jaws to one common center. A self centering 4 jaw chuck which is used for different work piece geometries is creating 2 separate centers via the 2 opposed jaw sets. The mechanical synchronizing is causing a redundant positioning, which affects the clamping negatively.

The **Centco4** with its 2+2 self centering-compensating clamping centers the work piece with 2 independent axes. The self centering 2 axes work independent from each other, and thus can reach one common center. This works with any work piece geometry or tolerance. The grip force is only built up, after both jaw axes have reached their common center. This guaranties a very sensitive and high accurate clamping at any grip force and best machining results.

Actuation by central piston: In the **Centco4** 2+2 self centering-compensating chuck the 2 self centering axes are operated via 1 common central actuating piston. This allows the use of a standard single piston cylinder. Compared to chucks with double piston drive, is saves the use of an expensive double piston cylinder, the additional hydraulic valves and the additional M-codes.

Centrifugal compensation: The rotation of a chuck results in centrifugal forces that act onto the master jaws and the top jaws. It reduces the static grip force, and thus reduces the dynamic chip removal. The centrifugal force system of the **Centco4** reduces this effect, and thus improves the dynamic chip removal, the safety and the roundness of the work pieces.

Direct pressure lubrication system: In a pressure lubrication system all loaded areas are directly lubricated via direct channels. Used lubricant is directly replaced by new lubricant. Compared to open lubrication systems it reduced the amount of lubricant needed, increases the lubrication intervals and avoids tribo corrosion

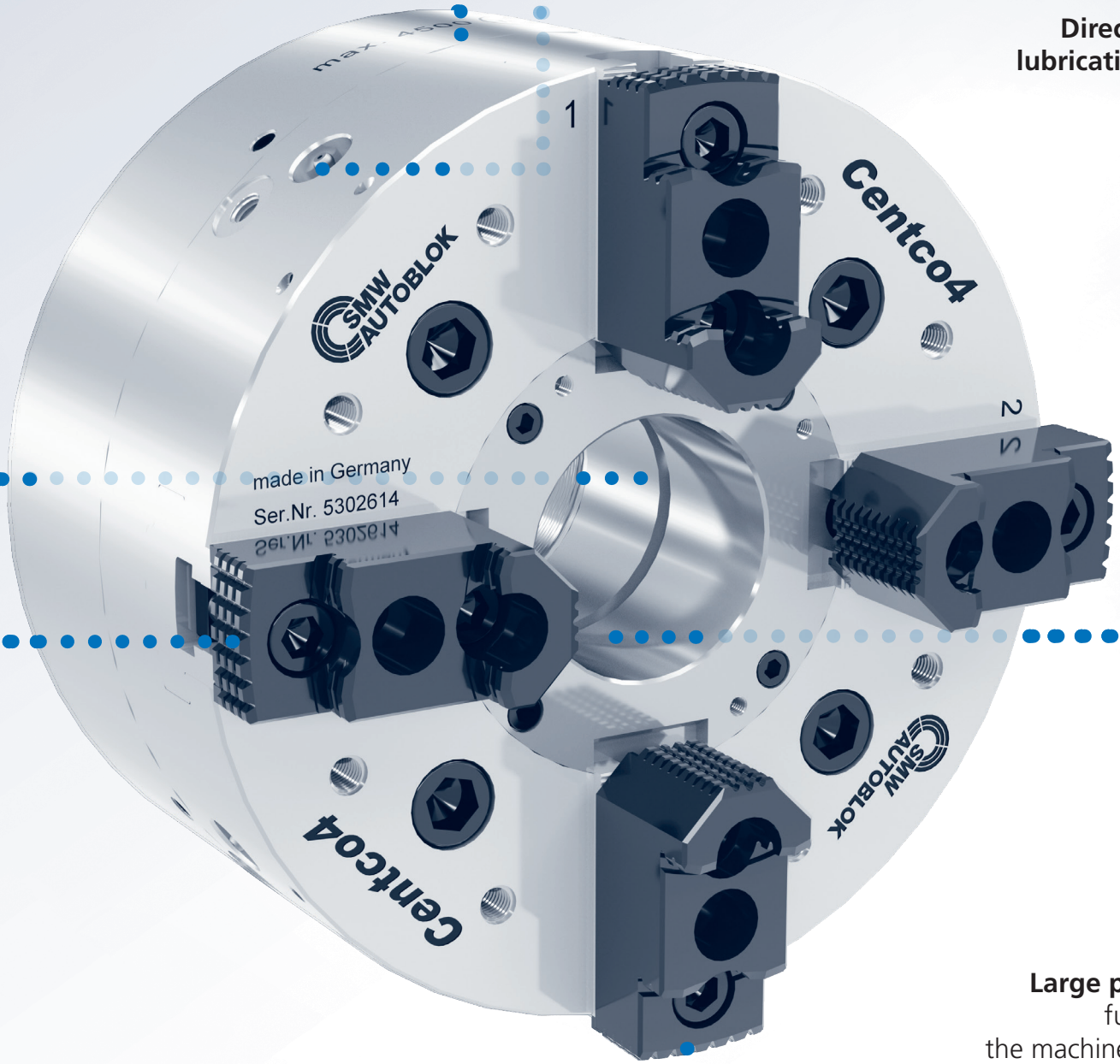

Direct pressure lubrication system

Large passage,
full use of
the machine spindle

Centco4

INCH / METRIC
SERRATION

4-jaw chuck

- 2+2 self centering
- Independent self centering clamping in 2 axis
- Centrifugal force compensation

Application/customer benefits

- Independent self centering clamping in 2 axis via 1 central actuating mechanism
- Mechanical centering of the workpiece
- Standard cylinder can be used for actuating
- Clamping of every workpiece geometry possible
- Less workpiece deformation compared to 3-jaw chucks
- Long lifetime due to case hardened parts
- Large range of standard top jaws
- Suitable für OD and ID clamping

Technical features

- Centrifugal force compensation
- Optimized lubrication system
- Large through-hole
- Jaw interface inch / metric

Standard equipment

4-jaw chuck,
8 pieces T-nuts and bolts

Ordering example

4-jaw chuck
Centco4-260-7-Z-220

Function / Application examples

2+2 self centering and compensating clamping*

In the beginning the jaw pairs **Z1** + **Z2** only apply a force that is necessary to center the workpiece. Only if both jaw pairs **Z1** and **Z2** are in contact with the workpiece, the grip force necessary for machining is applied.

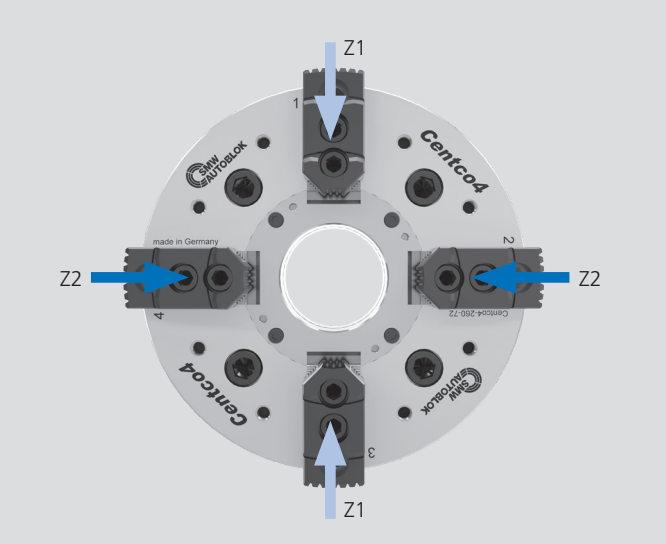

2+2 self centering and compensating clamping of round or thinwalled workpieces

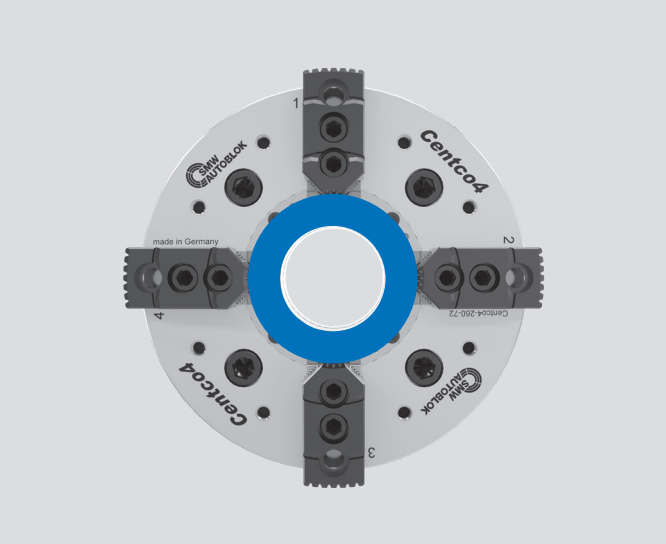

2+2 self centering and compensating clamping of rectangular or square workpieces

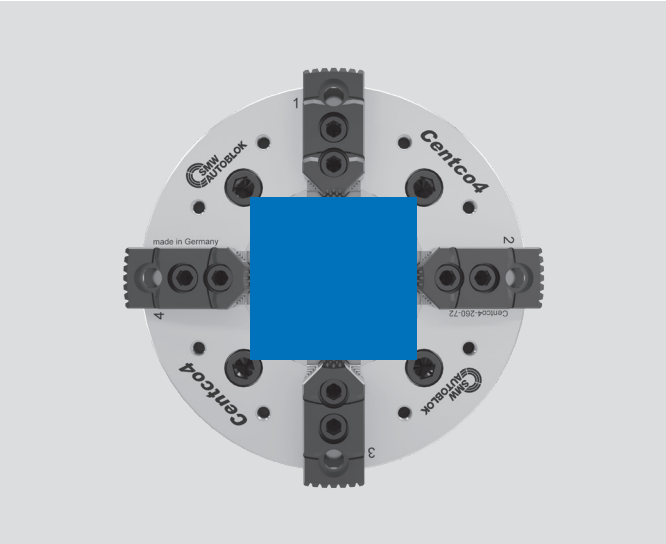

2+2 self centering and compensating clamping of unshaped workpieces

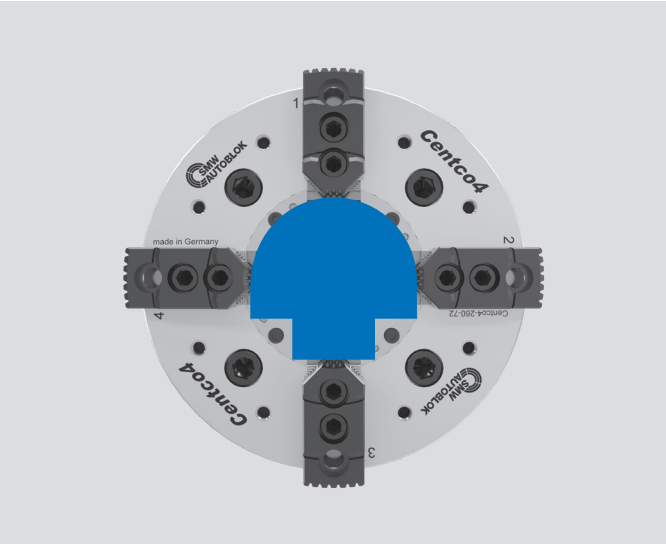

* **Z1**: Self centering clamping axis 1 / **Z2**: self centering clamping axis 2.
Z1 is compensating to **Z2**.

4-jaw chuck

- 2+2 self centering
- Independent self centering clamping in 2 axis
- Centrifugal force compensation

Centco4

INCH / METRIC
SERRATION

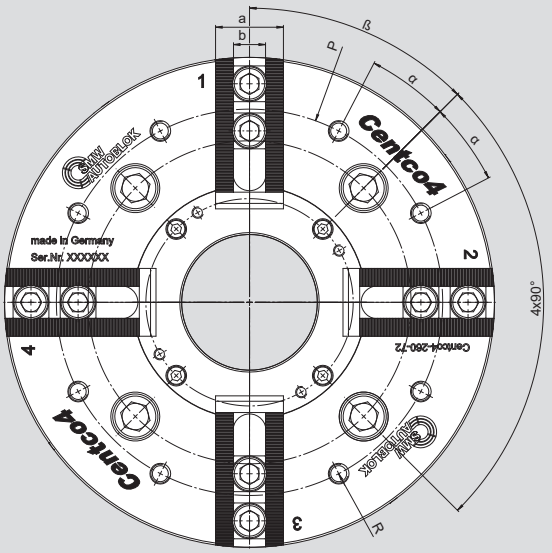

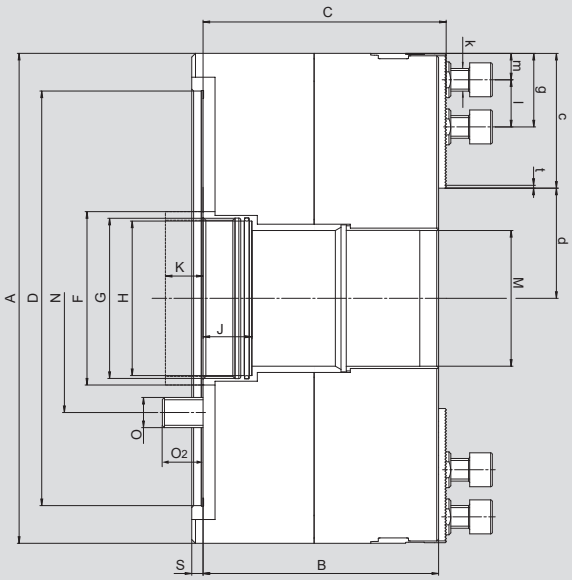

Subject to technical changes.
For more detailed information please ask our customer service.

SMW-AUTOBLOK Type		Centco4 210-52	Centco4 260-72	Centco4 315-92	Centco4 400-112	Centco4 400-112	Centco4 500-155	Centco4 630-165
Mounting		**Z170**	**Z220**	**Z300**	**Z300**	**Z380**	**Z380**	**Z380**
Outside diameter	**A**	210	260	315	400	400	500	630
	B	108.5	125	134	146	146	156	156
	C	110.5	129	138	148	148	159	159
Diameter Mounting	**D** H6	170	220	300	300	380	380	380
	F	68	92	115	142	142	178	188
Piston thread / depth	**G**	M60 x 2 / 20	M85 x 2 / 20	M105 x 2 / 20	M125 x 2 / 28	M125 x 2 / 28	M165 x 2 / 28	M175 x 2 / 28
Centering draw tube	**H** H7	57	82	102	122	122	162	172
Face contact draw tube	**J**	30	30	30	38	38	38	38
Piston stroke	**K**	17	20	23	25	25	30.5	30.5
Through-hole	**M** H7	52	72	92	112	112	155	165
Bolt circle	**N**	133.4	171.4	235.0	235.0	330.2	330.2	330.2
Fixing bolt	**O**	M12	M16	M20	M20	M24	M24	M24
	O2	19.5	22	29	25	29	34.5	34.5
	P	170	205	260	280	280	410 / 280	585 / 420 / 300
Thread / depth	**R**	M8 / 12	M10 / 21	M10 / 15	M10 / 15	M10 / 15	M10 / 15	2xM16/24-M12/18
	S	5	6	6	6	6	6	6
Base jaw width	**a**	35	36	40	45	45	60	60
Groove width inch serration	**b** H7	14	17	17	21	21	25.5	25.5
Groove width metric serration	**b** H7	14	14	14	-	-	-	-
	c	60	71.5	91	117.5	117.5	142.5	202.5
Jaw position max.	**d**	45	58.5	66.5	82.5	82.5	107.5	112.5
Spacing max. / min.	**g**	47 / 22	58 / 25	78 / 25	104 / 35	104 / 35	115 / 44	175 / 44
Bolt ISO 4762 12.9 inch serration	**k**	M10	M12	M12	M16	M16	M20	M20
Bolt ISO 4762 12.9 metric serration	**k**	M12	M12	M12	-	-	-	-
Spacing min.	**l**	16* / 23**	19	19	25	25	30	30
Spacing min.	**m**	6	6	6	10	10	14	14
Inch serration	**t**	1/16" x 90°	1/16" x 90°	1/16" x 90°	1/16" x 90°	1/16" x 90°	3/32" x 90°	3/32" x 90°
Metric serration	**t**	1.5 x 60°	1.5 x 60°	1.5 x 60°	-	-	-	-
	α	17.5°	17.5°	17.5°	17.5°	17.5°	15°	15°
	β	45°	45°	45°	45°	45°	45°	45°
Stroke per jaw	mm	4.5	5.25	6	6.5	6.5	8	8
Equalising per jaw	mm	3.4	4	5	5	5	6	6
Max. actuating force	kN	40	50	60	85	85	90	90
Max. total gripping force	kN	100	125	150	210	210	230	230
Max. speed	min-1	5000	4500	4000	3200	3200	2300	1800
Weight (without jaws)	kg	24.5	42	66	123	121.5	200	330
Moment of inertia	kg·m²	0.15	0.4	0.92	2.75	2.7	7.12	18.1
Recommended actuating cylinder		**SIN-S 100 / 125**	**SIN-S 125 / 150**	**SIN-S 125 / 150**	**SIN-S 150 / 175**	**SIN-S 150 / 175**	**SIN-S 150 / 175**	**SIN-S 150 / 175**
Recommended actuating cylinder		**VNK-T2 130-52**	**VNK-T2 170-77**	**VNK-T2 225-95**	**VNK-T2 250-110**	**VNK-T2 250-110**	**VSG 450-165**	**VSG 450-165**

* for zoll
** for metric

Centco4-D

INCH SERRATION

■ Jaws*

MHB-D (INCH SERRATION)
Hard, reversible stepped top jaws

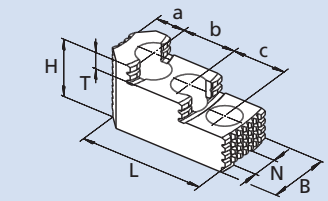

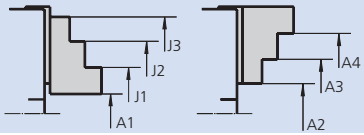

Centco4	210-52	260-72	315-92	400-112	500-115	630-165
Jaw type	MHB-D 160	MHB-D 200	MHB-D 200	MHB-D 251	MHB-D 500	MHB-D 500
Id. No.	12081638	12082038	12082038	12083038	12084548	12084548
Serration	1/16" x 90°	1/16" x 90°	1/16" x 90°	1/16" x 90°	3/32" x 90°	3/32" x 90°
B	34	40	40	45	60	60
H	39	45	45	56	75	75
L	65.2	82	82	106.2	140.8	140.8
T	10	10.5	10.5	13.5	19	19
N	14	17	17	21	25.5	25.5
a	18	19	19	26	38	38
b	16.5	23	23	30	38	38
c	16.5	23	23	30	38	38
kg / set	0.9	2.3	2.3	2.9	9.5	9.5
A1	41 - 127	52 - 161	66 - 216	69 - 263	109.5 - 320	119 - 448.5
A2	-	-	-	-	-	-
A3	90 - 173.5	102.5 - 211.5	116.5 - 265.5	160 - 355	229 - 440	239 - 573
A4	138 - 210**	177.5 - 260**	192 - 315**	245 - 400**	328 - 500**	338 - 630**
J1	87 - 172	100 - 208	114 - 263	124 - 316.5	193.5 - 403	204 - 531.5
J2	135 - 210**	174 - 260**	188 - 315**	207 - 400**	291.5 - 500**	301.5 - 630**
J3	197.5 - 210**	216 - 260**	230 - 315**	279 - 400**	389.5 - 500**	399 - 630**

MWB-D (INCH SERRATION)
Soft top jaws
Tall version

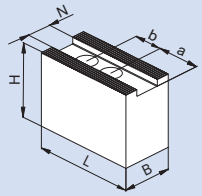

Centco4	210-52	260-72	315-92	400-112	500-115	630-165
Jaw type	MWB-D 165	MWB-D 200	MWB-D 200	MWB-D 250	MWB-D 400	MWB-D 400
Id. No.	5318607	5318837	5318837	5319680	5319831	5319831
Serration	1/16" x 90°	1/16" x 90°	1/16" x 90°	1/16" x 90°	3/32" x 90°	3/32" x 90°
B	35	40	40	50	60	60
H	60	60	60	80	90	90
L	70	90	90	120	170	170
N	14	17	17	21	25.5	25.5
a	33	43	43	62	90	90
b	16.5	22	22	28	35	35
kg / set	2.8	4.1	4.1	9.2	21.6	21.6

AWB-D (INCH SERRATION)
Soft top jaws
Low / pointed version

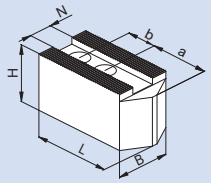

Centco4	210-52	260-72	315-92	400-112	500-115	630-165
Jaw type	AWB-D 165	AWB-D 200	AWB-D 200	AWB-D 250	AWB-D 400	AWB-D 400
Id. No.	5318608	5318838	5318838	5319681	5319834	5319834
Serration	1/16" x 90°	1/16" x 90°	1/16" x 90°	1/16" x 90°	3/32" x 90°	3/32" x 90°
B	40	40	40	50	60	60
H	40	40	40	50	60	60
L	100	110	110	120	170	170
N	14	17	17	21	25.5	25.5
a	43	53	53	70	115	115
b	22	22	22	28	35	35
kg / set	2.4	2.7	2.7	5.4	14.5	14.5

SBS-D (INCH SERRATION)
Soft pie jaws

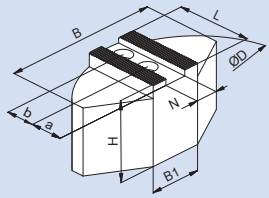

Centco4	210-52	260-72	315-92	400-112	500-115	630-165
Jaw type	SBS-D 165	SBS-D 200	SBS-D 200	SBS-D 200	SBS-D 400	SBS-D 400
Id. No.	5318610	5318839	5318839	5319684	5319832	5319832
Serration	1/16" x 90°	1/16" x 90°	1/16" x 90°	1/16" x 90°	3/32" x 90°	3/32" x 90°
B	120	140	140	180	330	330
B1	40	64	64	50	190	190
D	165	200	200	250	440	440
H	60	60	60	70	85	85
L	60	70	70	80	155	155
N	14	17	17	21	25.5	25.5
a	25	35	35	30	85	85
b	22	22	22	29	35	35
kg / set	7.1	10.3	10.3	18.3	71	71

SBA-D (INCH SERRATION)
Soft pie jaws aluminum
light version

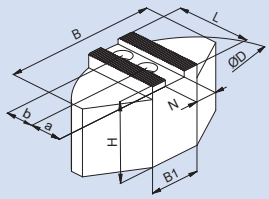

Centco4	210-52	260-72	315-92	400-112	500-115	630-165
Jaw type	SBA-D 165	SBA-D 200	SBA-D 200	SBA-D 250	SBA-D 400	SBA-D 400
Id. No.	5318609	5318840	5318840	5319685	5319833	5319833
Serration	1/16" x 90°	1/16" x 90°	1/16" x 90°	1/16" x 90°	3/32" x 90°	3/32" x 90°
B	110	120	120	160	330	330
B1	40	40	40	50	190	190
D	165	200	200	250	440	440
H	58	58	58	78	98	98
L	58	72.5	72.5	87.5	160	160
N	14	17	17	21	25.5	25.5
a	25	35	35	40	85	85
b	20	22	22	29	35	35
kg / set	2.4	3.7	3.7	7.2	32	32

* Attention: The values are calculated theoretical values only at 1 mm clamping stroke and 1 mm residual jaw stroke.
SMW-AUTOBLOK is recommending not to clamp any diameters, that are larger than the chuck O.D.
If you have any questions, please do not hesitate to contact our customer service.

** Not larger than Chuck O.D.

Centco4-M

METRIC SERRATION

MHB-M (METRIC SERRATION)
Hardened reversible top jaws

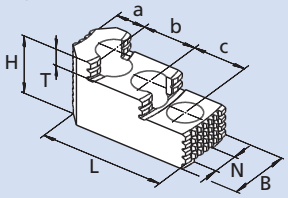

Clamping ranges

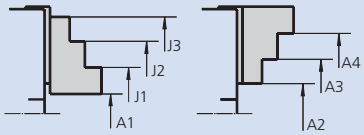

Centco4		210-52	260-72	315-92
Jaw type		MHB-M 140/4	MHB-M 140/4	MHB-M 140/4
Id. No.		12082129	12082129	12082129
Serration		1.5 x 60°	1.5 x 60°	1.5 x 60°
	B	40	40	40
	H	45	45	45
	L	86	86	86
	T	10.5	10.5	10.5
	N	14	14	14
	a	19	19	19
	b	25	25	25
	c	25	25	25
kg / set		2.4	2.4	2.4
	A1	23.5 - 61.5	55 - 112	60.5 - 167
	A2	-	-	-
	A3	78.5 - 116	109.5 - 166	115 - 220
	A4	153.5 - 191	185 - 242	191 - 296
	J1	79 - 113.5	108 - 163	113 - 218
	J2	150.5 - 187.5	181.5 - 238	186.5 - 293
	J3	196 - 210**	227 - 260**	232.5 - 315**

WBJ-M (METRIC SERRATION)
Soft top jaws
Tall version

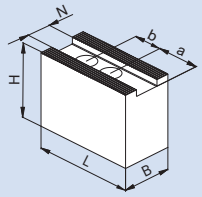

Centco4		210-52	260-72	315-92
Jaw type		WBJ-M 1403/4	WBJ-M 1403/4	WBJ-M 1403/4
Id. No.		5311479	5311479	5311479
Serration		1.5 x 60°	1.5 x 60°	1.5 x 60°
	B	40	40	40
	H	60	60	60
	L	90	90	90
	N	14	14	14
	a	45	45	45
	b	25	25	25
kg / set		3.6	3.6	3.6

AWB-M (METRIC SERRATION)
Soft top jaws
Low / pointed version

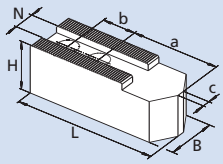

Centco4		210-52	260-72	315-92
Jaw type		AWB-M 1401/4	AWB-M 1401/4	AWB-M 1401/4
Id. No.		5311476	5311476	5311476
Serration		1.5 x 60°	1.5 x 60°	1.5 x 60°
	B	35	35	35
	H	40	40	40
	L	102	102	102
	N	14	14	14
	a	57	57	57
	b	25	25	25
	c	4	4	4
kg / set		3.5	3.5	3.5

SBJ-M (METRIC SERRATION)
Soft pie jaws

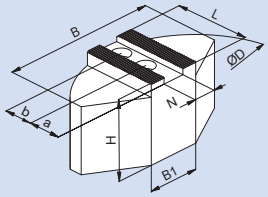

Centco4		210-52	260-72	315-92
Jaw type		SBJ-M 200/4	SBJ-M 200/4	SBJ-M 200/4
Id. No.		5311478	5311478	5311478
Serration		1.5 x 60°	1.5 x 60°	1.5 x 60°
	B	140	140	140
	B1	70	70	70
	D	200	200	200
	H	60	60	60
	L	70	70	70
	N	14	14	14
	a	30	30	30
	b	25	25	25
kg / set		12	12	12

SBJ-MA (METRIC SERRATION)
Soft pie jaws aluminum
Light version

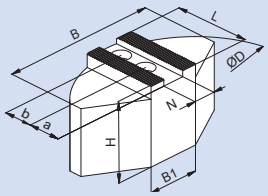

Centco4		210-52	260-72	315-92
Jaw type		SBJ-MA 200/4	SBJ-MA 200/4	SBJ-MA 200/4
Id. No.		5311477	5311477	5311477
Serration		1.5 x 60°	1.5 x 60°	1.5 x 60°
	B	140	140	140
	B1	50	50	50
	D	200	200	200
	H	58	58	58
	L	75	75	75
	N	14	14	14
	a	35	35	35
	b	25	25	25
kg / set		4.1	4.1	4.1

* Attention: The values are calculated theoretical values only at 1 mm clamping stroke and 1 mm residual jaw stroke.
SMW-AUTOBLOK is recommending not to clamp any diameters, that are larger than the chuck O.D.
If you have any questions, please do not hesitate to contact our customer service.
** Not larger than Chuck O.D.

GG-D (INCH SERRATION)
Hard roughing jaws

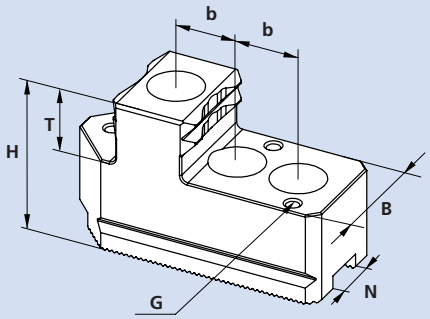

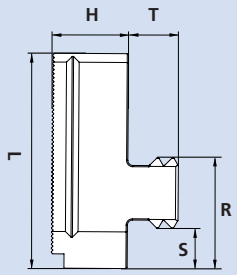

Type	Id. No.	External clamping*	Internal clamping*	B	H	L	R	S	T	G	N	b	Serration	kg / Set	SMW-AUTOBLOK Chuck
GG-D 210	**5325558**	48-205	104-210	35	50	85	44	16	20	M5	14	20	1/16"x90°	2.252	Centco4 D210
GG-D 260	**5325560**	49-256	128-260	36	55	100	52	11	20	M5	17	25	1/16"x90°	3.364	Centco4 D260
GG-D 315	**5325562**	50-309	146-315	40	55	110	65	17	20	M8	17	25	1/16"x90°	4.184	Centco4 D315
GG-D 400	**5325564**	72-394	171-400	50	60	130	64	13	22	M8	21	32,5	1/16"x90°	6.8524	Centco4 D400
GG-D 500	**5325565**	127-495	242-500	60	60	150	73	14,5	22	M8	25.5	40	3/32"	9.04	Centco4 D500
GG-D 630	**5325566**	105-630	242-630	60	60	180	83	13	22	M8	25.5	50	3/32"	11.492	Centco4 D630

GG-M (METRIC SERRATION)
Hard roughing jaws

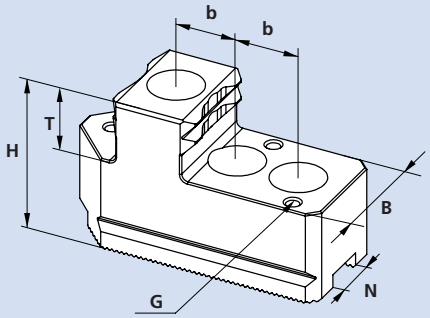

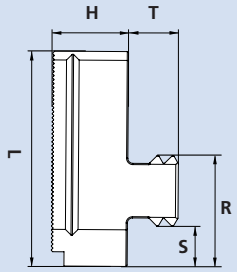

Type	Id. No.	External clamping	Internal clamping	B	H	L	R	S	T	G	N	b	Serration	kg / Set	SMW-AUTOBLOK Chuck
GG-M 210	**5325559**	46-201	113-210	35	50	85	49	15	20	M5	14	21,5	1.5x60°	2.268	Centco4 M210
GG-M 260	**5325561**	65-258	141-260	36	55	100	51	13,5	20	M5	14	23	1.5x60°	3.224	Centco4 M260
GG-M 315	**5325563**	51-308	147-315	40	55	110	65	17	20	M8	14	25	1.5x60°	4.224	Centco4 M315

* Attention: The values are calculated theoretical values. SMW-AUTOBLOK is recommending not to clamp any diameters, that are larger than the chuck O.D.
If you have any questions, please do not hesitate to contact our customer service.

■ T-Nuts
■ Covers for through-hole

Centco4

INCH / METRIC
SERRATION

NST
T-nuts
suitable for Centco4-D

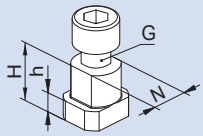

Centco4		210-52	260-72	315-92	400-112	500-155	630-165
T-nut type		NST14	NST17	NST17	NST21	NST25	NST25
Id. No.		163134	016021	016021	014788	014812	014812
	N	14	17	17	21	25.5	25.5
	H	20	23	23	27	29	29
	h	7.5	9	9	10	11	11
Cyl.-screw ISO 4762-12.9	G	M10 x 25	M12 x 30	M12 x 30	M16 x 35	M20 x 40	M20 x 40
Torque Md max. (Nm)		40	60	60	150	200	200

NST
T-nuts
suitable for Centco4-M

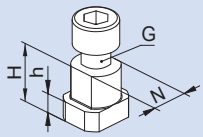

Centco4		210-52	260-72	315-92
T-nut type		NST17/14	NST17/14	NST17/14
Id. No.		036976	036976	036976
	N	14	14	14
	H	20.5	20.5	20.5
	h	-	-	-
Cyl.-screw ISO 4762-12.9	G	M12 x 25	M12 x 25	M12 x 25
Torque Md max. (Nm)		60	60	60

cover for
through-hole

Centco4	210-52	260-72	315-92	400-112	500-155	630-165
Id. No.	163135	163136	163137	163138	163584	163585

Important for maintenance and safe operation, to be ordered with the chuck

Grease K67

Special grease for
manual and power chucks

Cartridge 14 Oz. (DIN 1284)
Grease content 500 g
Id. No. 10731223

Can 1000 g
Id. No. 10731224

- High adhesion
- High resistance against coolant
- High load bearing capacity
- Low friction coefficient
- Avoids tribocorrosion

Grease gun

Grease gun (DIN 1283) for
cartridges 14 Oz. (DIN 1284)
■ Also refillable from grease can 1000 g

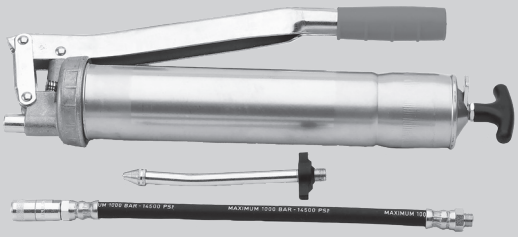

Lubrication set Id. No. 083726
Supply range
- Grease gun
- 1 Adapter flexible for high pressure grease nipple
- 1 Adapter for cone grease nipple

Centco4

INCH / METRIC SERRATION

■ Spindle adapters

Subject to technical changes.
For more detailed information please ask our customer service.

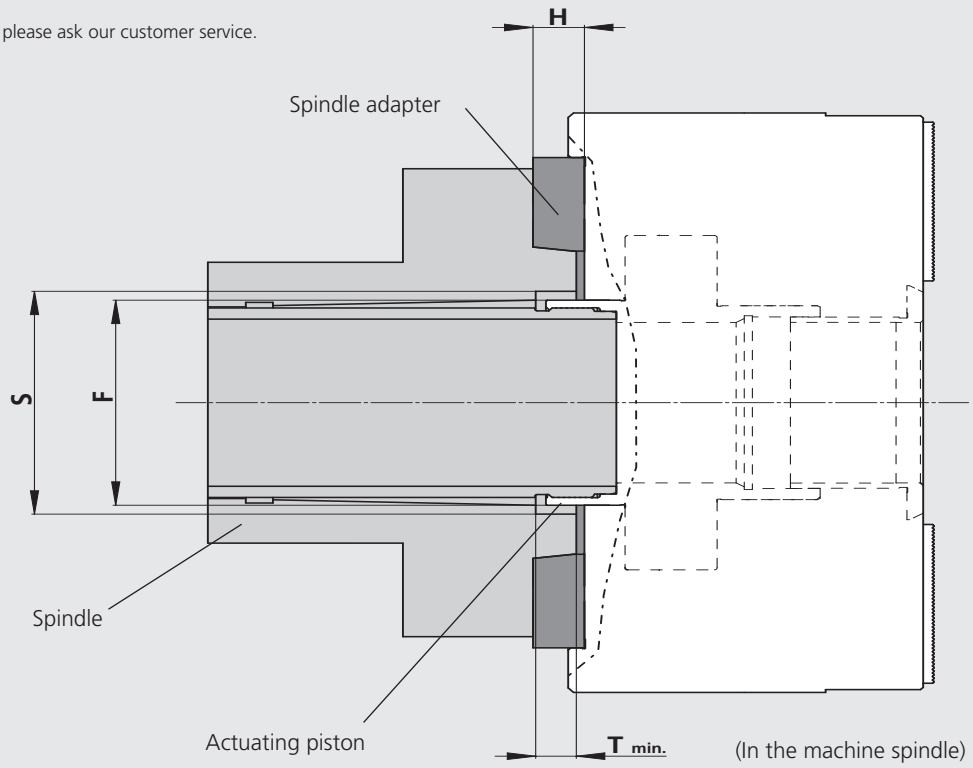

Base chuck type Centco4 D / M	Spindle mounting	Actuating piston dia. F [mm]	Clearance - dia. S [mm]	Clearance - depth T min. [mm]*	Id. No. Spindle adapter	Spindle adapter height H [mm]	Order review ASA	
							Id. No. cpl. Chuck inch serration D + Spindle adapter	Id. No. cpl. Chuck metric serration M + Spindle adapter
210-52-Z170	A06	68	> 68	14	24162000	17	163842	163844
			< 68	-	24162110	40	163843	163845
260-72-Z220	A06	92	< 92	-	24162532	50	163874	163877
	A08	92	> 92	17	24182500	19	163875	163878
			< 92	-	24182520	43	163876	163879
315-92-Z300	A08	115	> 115	10	24183100	30	163880	163885
			< 115	-	24184000	40	163881	163886
	A11	115	> 115	20	24113100	21	163882	163887
			> 115	11	24113110	30	163883	163888
			< 115	-	2704390	44	163884	163889
400-112-Z300	A11	142	< 142	-	2704390	44	163890	-
400-112-Z380	A11	142	> 142	2	24115000	40	163891	-
			< 142	-	2704391	44	163892	-
	A15	142	> 142	23	24125000	23	163893	-
			< 142	-	2704392	47	163894	-
500-155-Z380	A11	178	> 178	8	24115000	40	163895	-
			< 178	-	2704606	50	163896	-
	A15	178	> 178	26.5	24125000	23	163897	-
			< 178	-	273765	50	163898	-
630-165-Z380	A11	188	> 188	8	24115000	40	163899	-
			< 188	-	2704606	50	163900	-
	A15	188	> 188	26.5	24125000	23	163901	-
			< 188	-	273765	55	163902	-

* to clear the axial stroke of the actuating piston (see on page „technical details piston stroke" K)

Ordering review Centco4-D (inch serration)

Centco4-D

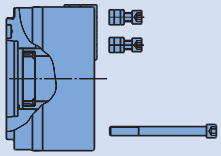

Supply range:
- Chuck + mounting bolts
- 8 pieces T-nuts with bolts

Size / Spindle mounting / Flange height	Centco4-D 210-52	Centco4-D 260-72	Centco4-D 315-92	Centco4-D 400-112	Centco4-D 500-155	Centco4-D 630-165
Centering rim	-	-	-	Z 300	-	-
small	-	-	-	163175	-	-
Centering rim	Z 170	Z 220	Z 300	Z 380	Z 380	Z 380
large	163120	162780	163140	163160	163580	163770
A 06 (17**)	163842	-	-	-	-	-
A 06 (40**)	163843	-	-	-	-	-
A 06 (50**)	-	163874	-	-	-	-
A 08 (19**)	-	163875	-	-	-	-
A 08 (30**)	-	-	163880	-	-	-
A 08 (40**)	-	-	163881	-	-	-
A 08 (43**)	-	163876	-	-	-	-
A 11 (21**)	-	-	163882	-	-	-
A 11 (30**)	-	-	163883	-	-	-
A 11 (40**)	-	-	-	163891*	163895	163899
A 11 (44**)	-	-	163884	163890	-	-
A 11 (44**)	-	-	-	163892*	-	-
A 11 (50**)	-	-	-	-	163896	163900
A 15 (23**)	-	-	-	163893*	163897	163901
A 15 (47**)	-	-	-	163894*	-	-
A 15 (50**)	-	-	-	-	163898	163902

Ordering review Centco4-M (metric serration)

Centco4-M

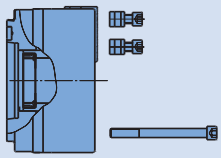

Supply range:
- Chuck + mounting bolts
- 8 pieces T-nuts with bolts

Size / Spindle mounting / Flange height	Centco4-M 210-52	Centco4-M 260-72	Centco4-M 315-92
Centering rim	-	-	-
small	-	-	-
Centering rim	Z 170	Z 220	Z 300
large	163795	162795	163797
A 06 (17**)	163844	-	-
A 06 (40**)	163845	-	-
A 06 (50**)	-	163877	-
A 08 (19**)	-	163878	-
A 08 (30**)	-	-	163885
A 08 (40**)	-	-	163886
A 08 (43**)	-	163879	-
A 11 (21**)	-	-	163887
A 11 (30**)	-	-	163888
A 11 (44**)	-	-	163889

* With base chuck Centco4-400-112-Z380
** Refers to height of spindle flange see page „spindle adapters“

Centco4 *digit*-HLW

INCH
SERRATION

Hydraulic 4-jaw power chuck

■ Digitized by integrated sensor technology

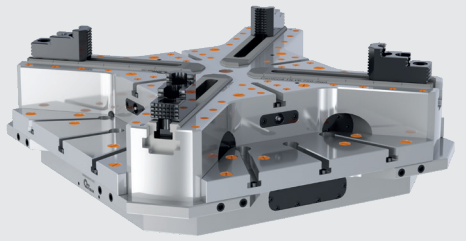

proofline® series
fully sealed – low maintenance

Application/customer benefits

- Chuck with integrated sensoric technology
- Monitoring of different process parameters even during machining
- Non-contact power supply for sensors and signal output by means of inductive couplers
- Integrated hydraulic actuation with safety system

Technical data

- Clamping force 130 kN
- Max. Operating pressure 80 bar
- Jaw stroke 12 mm
- **proofline®** = fully sealed – low maintenance

Standard equipment

4-jaw chuck

Ordering example

4-jaw chuck
Centco4 *digit*-HLW

Centco4 *digit*-HLW

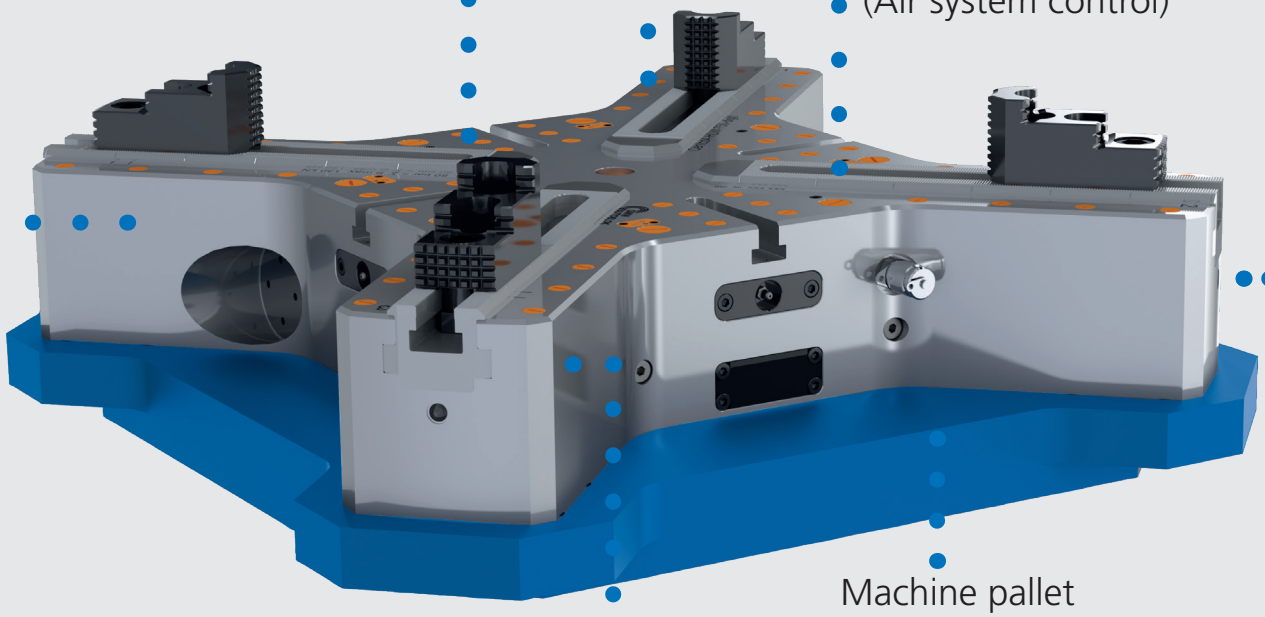

Centco4 *digit*-HLW

INCH
SERRATION

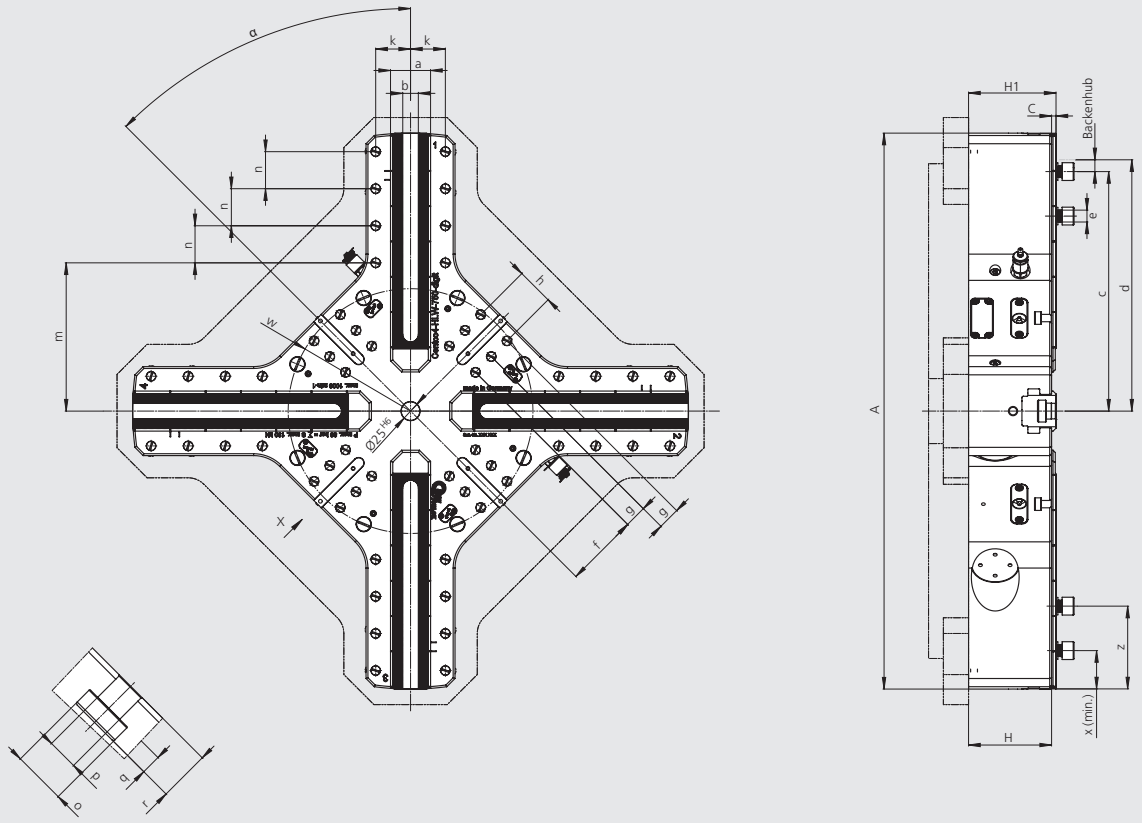

Subject to technical changes. For more detailed information please ask our customer service.

SMW-AUTOBLOK Typ Centco4 *digit*-HLW			750-4
Id.-No.			**On request**
Outside diameter	**A**	mm	750
Base plate height	**B**	mm	
	C	mm	6
Chuck height	**H**	mm	112
	H1	mm	118
Jaw width	**a**	mm	54
Slot width	**b** H8	mm	21
Jaw position min.	**c**	mm	363
Jaw position max.	**d**	mm	375
Bolt ISO4762-12.9	**e**	mm	M16
	f	mm	99
	g	mm	2 x 30
	h	mm	50
	k	mm	47
	m	mm	200
	n	mm	3 x 50
T-slot width	**o**	mm	24
T-slot width	**p**	mm	14
Height of width **o**	**q**	mm	9
Total depth T-slot	**r**	mm	23
	s/s¹	mm	
	t/t¹	mm	
	u/u¹	mm	
	w	mm	330.2
Min.	**x**	mm	12.5
Min. / max.	**z**	mm	25 / 245
	α	deg.	45°
	β	deg.	
	γ	deg.	
Serration		inch	1/16"x 90°
Max. speed		min^{-1}	1000
Max. total clamping force		kN	130
Stroke per jaw		mm	12
Compensation stroke per jaw		mm	10
Weight (without jaws)		kg	Customized
Moment of inertia		$kg \cdot m^2$	Customized

Centco4 *digit*-HLW

INCH
SERRATION

Accessories

■ Jaws*

MHB-D (INCH SERRATION)

Hard, reversible stepped
Top jaws

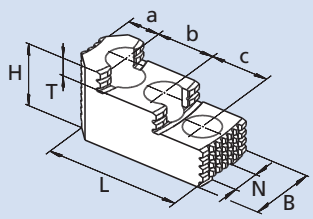

Centco4 *digit*-HLW	750-4
Jaw type	MHB-D 251
Id. No.	12083038
Serration	1/16" x 90°
B	45
H	56
L	106.2
T	13.5
N	21
a	26
b	30
c	30
kg / set	2.9

MWB-D (INCH SERRATION)

Soft top jaws
Tall version

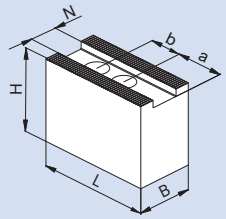

Centco4 *digit*-HLW	750-4
Jaw type	MWB-D 250
Id. No.	5319680
Serration	1/16" x 90°
B	50
H	80
L	120
N	21
a	62
b	28
kg / set	9.2

AWB-D (INCH SERRATION)

Soft top jaws
Low version

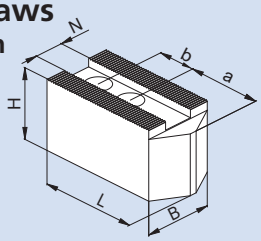

Centco4 *digit*-HLW	750-4
Jaw type	AWB-D 250
Id. No.	5319681
Serration	1/16" x 90°
B	50
H	50
L	120
N	21
a	70
b	28
kg / set	5.4

SBS-D (INCH SERRATION)

Soft pie jaws

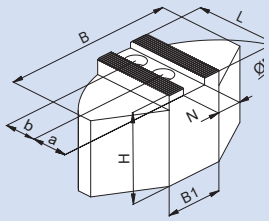

Centco4 *digit*-HLW	750-4
Jaw type	SBS-D 600/4
Id. No.	5322250
Serration	1/16" x 90°
B	330
B1	50
D	190
H	85
L	140
N	21
a	75
b	29
kg / set	56.3

SBA-D (INCH SERRATION)

Soft pie jaws aluminum
Light version

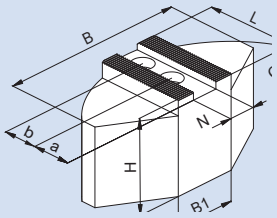

Centco4 digit-HLW	750-4
Jaw type	SBA-D 600/4
Id. No.	5322254
Serration	1/16" x 90°
B	330
B1	50
D	190
H	85
L	140
N	21
a	75
b	29
kg / set	20.1

* SMW-AUTOBLOK is recommending not to clamp any diameters, that are larger than the chuck O.D. For more detailed information please ask our customer service.
SMW-AUTOBLOK Jaws-catalog Request or download: www.smw-autoblok.de

MHB-D (INCH SERRATION)

Hard, reversible stepped
Top jaws

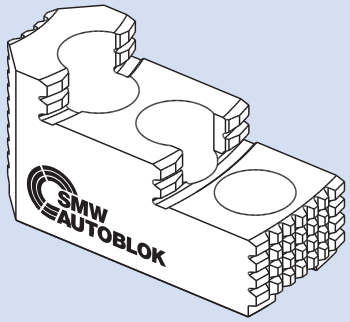

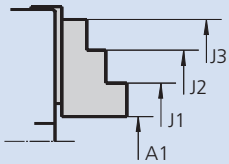

Clamping ranges

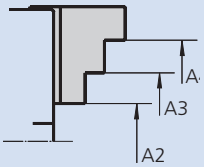

Centco4 *digit*-HLW	750-4
Jaw type	MHB-D200
Id. No.	12083038
A1	101-609
A2	-
A3	236-698.5
A4	321-750*
J1	155-662
J2	239-747.5
J3	311-750*

Note: min. 1 mm Residual jaw stroke
min. 1 mm Clamping stroke
* Not larger than chuck OD

Important for maintenance and safe operation, to be ordered with the chuck

Grease K67

Special grease for manual and power chucks

Cartridge 14 Oz. (DIN 1284)
Grease content 500g
Id. No. 10731223

Can 1000 g
Id. No. 10731224

- High adhesion
- High resistance against coolant
- High load bearing capacity
- Low friction coefficient
- Avoids tribocorrosion

Grease gun

Grease gun (DIN 1283) for cartridges 14 Oz. (DIN 1284)

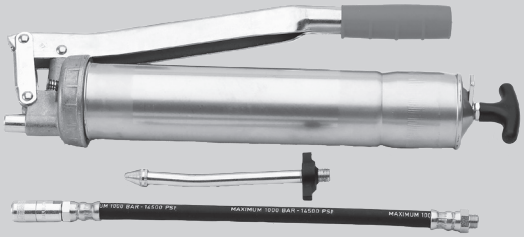

Lubrication set Id. No. 083726
Supply range
- Grease gun
- 1 Adapter flexible for high pressure grease nipple
- 1 Adapter for cone grease nipple

Notes

Notes

Notes

Notes

Notes

Notes

SMW-AUTOBLOK Catalogs

The following SMW-AUTOBLOK catalogs are available:

- Turning catalog
- Stationary Workholding catalog
- Jaws catalog
- Grinding catalog
- OCTG catalog
- Steady Rests brochure
- Product overview

Ask for our complete catalog Turning:

Download:
www.smw-autoblok.de

SMW-AUTOBLOK
Service benefits

- **Worldwide**
  Service and support on site
- **Rapid task force**
  Global reach in less time,
  technical problem-solving skills
- **Repair**
  Quick Repair, express service on request
- **Original spare parts**
  Relevant spare parts are available from stock
- **Training**
  Individual training courses
- **Run-off**
  Run-off and support at the point of use
- **Maintenance**
  Scheduled maintenance, at SMW-AUTOBLOK or at the customer
- **Warranty**
  Warranty of 24 month on request

zertifiziert
DIN EN ISO 9001
certified


SMW
AUTOBLOK

Germany
SMW-AUTOBLOK Spannsysteme GmbH
Postfach 1151 • D-88070 Meckenbeuren
Wiesentalstraße 28 • D-88074 Meckenbeuren
Tel.: +49 (0) 7542 - 405 - 0
Vertrieb Inland ➤ vertrieb@smw-autoblok.de
Fax: +49 (0) 7542 - 3886
Sales International ➤ sales@smw-autoblok.de
Fax: +49 (0) 7542 - 405 - 181

U.S.A.
SMW-AUTOBLOK Corporation
285 Egidi Drive - Wheeling, IL 60090
Tel. +1 847 - 215 - 0591
Fax +1 847 - 215 - 0594
E-mail ➤ autoblok@smwautoblok.com

Japan
SMW-AUTOBLOK Japan Inc.
1-56 Hira, Nishi-Ku
Nagoya
Tel. +81 (0) 52 - 504 - 0203
Fax +81 (0) 52 - 504 - 0205
E-mail ➤ infosaj@smwautoblok.co.jp

China
SMW-AUTOBLOK (Shanghai) Work Holding Co.,Ltd.
Building 6, No.72, JinWen Road, KongGang
Industrial Zone, ZhuQiao Town, Pudong District
201323, Shanghai P.R. China
Tel. +86 21 - 5810 - 6396
Fax +86 21 - 5810 - 6395
E-mail ➤ china@smwautoblok.cn

Mexico
SMW-AUTOBLOK Mexico, S.A. de C.V.
Acceso III No. 16 Int. 9,
Condominio Quadrum
Industrial Benito Juarez
Queretaro, Qro. C.P. 76120
Tel. +52 (442) 209 - 5118
Fax +52 (442) 209 - 5121
E-mail ➤ smwmex@smwautoblok.mx

India
SMW-AUTOBLOK Workholding Pvt. Ltd.,
Plot No. 4, Weikfield Industrial Estate,
Gat No. 1251, Sanaswadi, Tal - Shirur,
Dist – Pune. 412 208
Tel. +91 2137 - 616 974
E-mail ➤ info@smwautoblok.in

Turkey
SMW AUTOBLOK Makina San, Ve Tic. Ltd. ti.
Yeni ehir Mah, Osmanli Blv, Volume Kurtkoy Ofis
No:9, Kat:1, D:4, 32912, Pendik Istanbul
Tel. +90 216 629 - 2019
E-mail ➤ info@smwautoblok.com.tr

Sweden / Norway
SMW-AUTOBLOK Scandinavia AB
Kasernvägen 2
SE - 281 35 Hässleholm
Tel. +46 (0) 761 420 111
E-mail ➤ info@smw-autoblok.se

Italy
AUTOBLOK s.p.a.
Via Duca D'Aosta n.24
Fraz. Novaretto
I-10040 Caprie - Torino
Tel. +39 011 - 9638411
Tel. +39 011 - 9632020
Fax +39 011 - 9632288
E-mail ➤ info@smwautoblok.it

France
SMW-AUTOBLOK
17, Avenue des Frères Montgolfier - Z.I. Mi-Plaine
F-69680 Chassieu
Tel. +33 (0) 4.72.79.18.18
Fax +33 (0) 4.72.79.18.19
E-mail ➤ autoblok@smwautoblok.fr

Great Britain
SMW-AUTOBLOK Telbrook Ltd.
7 Wilford Industrial Estate
Ruddington Lane, Wilford
GB-Nottingham, NG11 7EP
Tel. +44 (0) 115 - 982 1133
E-mail ➤ info@smw-autoblok-telbrook.co.uk

Spain
SMW-AUTOBLOK IBERICA, S.L.
Ursalto 4 – Pab. 9-10 Pol. 27
20014 Donostia - San Sebastián (Gipuzkoa)
Tel.: +34 943 - 225 079
Fax: +34 943 - 225 074
E-mail ➤ info@smwautoblok.es

Canada
SMW AUTOBLOK CANADA CORP
1460 The Queensway - Suite 219
Etobicoke,ON M8Z 1S7
Tel. +1 416 - 316 - 3839
E-mail ➤ info@smwautoblok.ca

Taiwan
AUTOBLOK Company Ltd.
No.6, Shuyi Rd., South Dist.,
Taichung, Taiwan
Tel. +886 4-226 10826
Fax +886 4-226 12109
E-mail ➤ taiwan@smwautoblok.tw

Czech Republic / Slovakia
SMW-AUTOBLOK s.r.o.
Merhautova 20
CZ - 613 00 Brno
Tel. +420 513 034 157
E-mail ➤ info@smw-autoblok.cz

Poland
SMW-AUTOBLOK Poland Sp. z.o.o
Stalowa 17
41-506 Chorzów
Tel. +48 736 059 699
E-mail ➤ info@smwautoblok.pl

Korea
SMW-AUTOBLOK KOREA CO., LTD.
1502-ho, Charyong-ro 48beon-gil,
Uichang-gu, Changwon-si
Gyeongsangnam-do, 51391, Republic of Korea
Tel. +82 55 264 9505
E-mail ➤ info-korea@smw-autoblok.net

SMW AUTOBLOK
www.smw-autoblok.de